Jeep®

2019 Renegade

OWNER'S MANUAL

VEHICLES SOLD IN CANADA

With respect to any Vehicles Sold in Canada, the name FCA US LLC shall be deemed to be deleted and the name FCA Canada Inc. used in substitution therefore.

DRIVING AND ALCOHOL

Drunken driving is one of the most frequent causes of accidents.

Your driving ability can be seriously impaired with blood alcohol levels far below the legal minimum. If you are drinking, don't drive. Ride with a designated non-drinking driver, call a cab, a friend, or use public transportation.

WARNING!
Driving after drinking can lead to an accident. Your perceptions are less sharp, your reflexes are slower, and your judgment is impaired when you have been drinking. Never drink and then drive.

This manual illustrates and describes the operation of features and equipment that are either standard or optional on this vehicle. This manual may also include a description of features and equipment that are no longer available or were not ordered on this vehicle. Please disregard any features and equipment described in this manual that are not on this vehicle.

FCA US LLC reserves the right to make changes in design and specifications, and/or make additions to or improvements to its products without imposing any obligation upon itself to install them on products previously manufactured.

Copyright © 2018 FCA US LLC

TABLE OF CONTENTS

SECTION		PAGE
1	INTRODUCTION	3
2	GRAPHICAL TABLE OF CONTENTS	7
3	GETTING TO KNOW YOUR VEHICLE	13
4	GETTING TO KNOW YOUR INSTRUMENT PANEL	117
5	SAFETY	145
6	STARTING AND OPERATING	229
7	IN CASE OF EMERGENCY	365
8	SERVICING AND MAINTENANCE	429
9	TECHNICAL SPECIFICATIONS	489
10	MULTIMEDIA	501
11	CUSTOMER ASSISTANCE	571
12	INDEX	577

INTRODUCTION

CONTENTS

- INTRODUCTION 4
- HOW TO USE THIS MANUAL 5
  - Essential Information 5
  - Symbols 5
- ROLLOVER WARNING 5
- WARNINGS AND CAUTIONS 6
- VEHICLE MODIFICATIONS/ALTERATIONS 6

INTRODUCTION

Dear Customer, congratulations on selecting your new vehicle. Be assured that it represents precision workmanship, distinctive styling, and high quality.

This is a specialized utility vehicle. It can go places and perform tasks that are not intended for conventional passenger vehicles. It handles and maneuvers differently from many passenger vehicles both on-road and off-road, so take time to become familiar with your vehicle. If equipped, the two-wheel drive version of this vehicle was designed for on-road use only. It is not intended for off-road driving or use in other severe conditions suited for a four-wheel drive vehicle. Before you start to drive this vehicle, read the Owner's Manual. Be sure you are familiar with all vehicle controls, particularly those used for braking, steering, transmission, and transfer case shifting. Learn how your vehicle handles on different road surfaces. Your driving skills will improve with experience. When driving off-road, or working the vehicle, don't overload the vehicle or expect the vehicle to overcome the natural laws of physics. Always observe federal, state, provincial and local laws wherever you drive. As with other vehicles of this type, failure to operate this vehicle correctly may result in loss of control or a collision. Refer to the "Driving Tips" in "Starting and Operating" for further information.

This Owner's Manual has been prepared with the assistance of service and engineering specialists to acquaint you with the operation and maintenance of your vehicle. It is supplemented by Warranty Information, and customer oriented documents. In the attached Warranty Booklet you will find a description of the services that FCA offers to its customers, the Warranty Certificate and the details of the terms and conditions for maintaining its validity. Please take the time to read all of these publications carefully before driving your vehicle for the first time. Following the instructions, recommendations, tips, and important warnings in this manual will help assure safe and enjoyable operation of your vehicle.

This Owner's Manual describes all versions of this vehicle. Options and equipment dedicated to specific markets or versions are not expressly indicated in the text. Therefore, you should only consider the information which is related to the trim level, engine, and version that you have purchased. Any content introduced throughout the Owner's Information, that may or may not be applicable to your vehicle, will be identified with the wording "If Equipped". All data contained in this publication are intended to help you use your vehicle in the best possible way. FCA aims at a constant improvement of the vehicles produced. For this reason, it reserves the right to make changes to the model

described for technical and/or commercial reasons. For further information, contact an authorized dealer.

If applicable, refer to the Owner's Manual Supplement for related information.

NOTE: After reviewing the Owner's Information, it should be stored in the vehicle for convenient referencing, and remain with the vehicle when sold.

When it comes to service, remember that your authorized dealer knows your vehicle best, has factory-trained technicians and genuine MOPAR® parts, and cares about your satisfaction.

HOW TO USE THIS MANUAL

Essential Information

Consult the Table of Contents to determine which section contains the information you desire.

Since the specification of your vehicle depends on the items of equipment ordered, certain descriptions and illustrations may differ from your vehicle's equipment.

The detailed index at the back of this Owner's Manual contains a complete listing of all subjects.

Symbols

Some vehicle components have colored labels whose symbols indicate precautions to be observed when using this component. Refer to "Warning Lights and Messages" in "Getting To Know Your Instrument Panel" for further information on the symbols used in your vehicle.

ROLLOVER WARNING

Utility vehicles have a significantly higher rollover rate than other types of vehicles. This vehicle has a higher ground clearance and a higher center of gravity than many passenger vehicles. It is capable of performing better in a wide variety of off-road applications. Driven in an unsafe manner, all vehicles can go out of control. Because of the higher center of gravity, if this vehicle is out of control it may roll over while some other vehicles may not.

Do not attempt sharp turns, abrupt maneuvers, or other unsafe driving actions that can cause loss of vehicle control. Failure to operate this vehicle safely may result in a collision, rollover of the vehicle, and severe or fatal injury. Drive carefully.

80bfe0f0

Rollover Warning Label

Failure to use the driver and passenger seat belts provided is a major cause of severe or fatal injury. In fact, the U.S. government notes that the universal use of existing seat belts could cut the highway death toll by 10,000 or more each year and could reduce disabling injuries by two million annually. In a rollover crash, an unbelted person is significantly more likely to die than a person wearing a seat belt. Always buckle up.

WARNINGS AND CAUTIONS

This Owner's Manual contains **WARNINGS** against operating procedures that could result in a collision, bodily injury and/or death. It also contains **CAUTIONS** against procedures that could result in damage to your vehicle. If you do not read this entire Owner's Manual, you may miss important information. Observe all Warnings and Cautions.

VEHICLE MODIFICATIONS/ALTERATIONS

WARNING!

Any modifications or alterations to this vehicle could seriously affect its roadworthiness and safety and may lead to a collision resulting in serious injury or death.

GRAPHICAL TABLE OF CONTENTS

CONTENTS

- FRONT VIEW 8
- REAR VIEW 9
- INSTRUMENT PANEL 10
- INTERIOR 11

FRONT VIEW

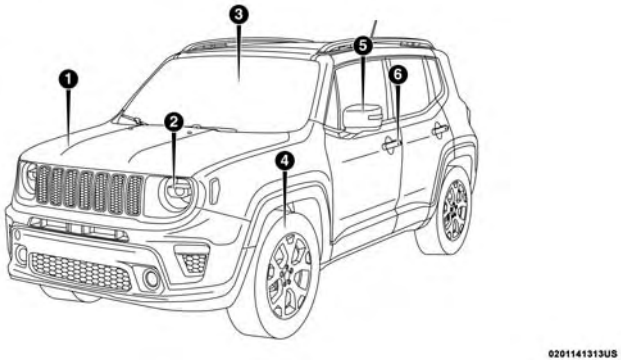

Front View

1 — Engine Compartment
2 — Headlight
3 — Windshield
4 — Wheel / Tire
5 — Exterior Mirror
6 — Door

REAR VIEW

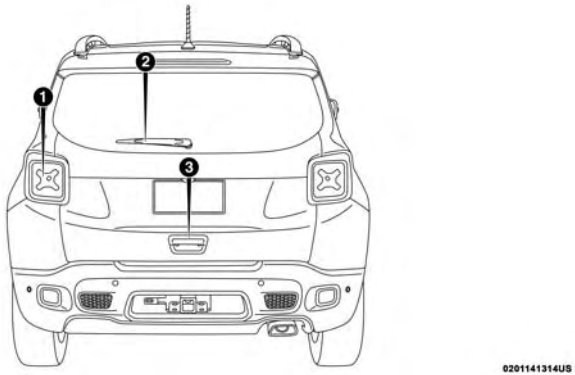

Rear View

1 — Rear Light
2 — Rear Windshield Wiper
3 — Liftgate Handle

INSTRUMENT PANEL

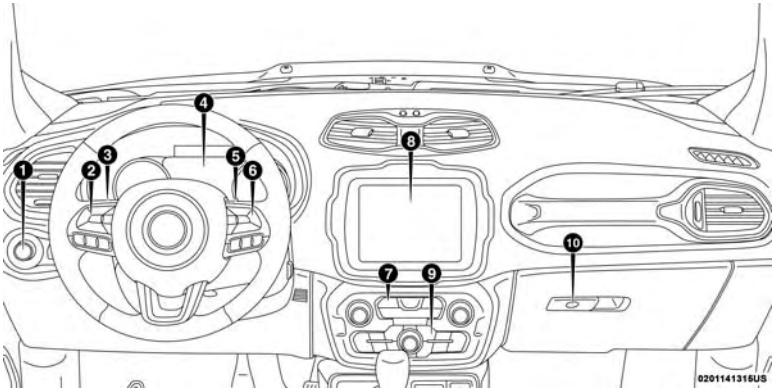

Instrument Panel

1 — Headlight Switch
2 — Instrument Cluster Display Controls
3 — Multifunction Lever (Behind Steering Wheel)
4 — Instrument Cluster
5 — Windshield Wiper Lever (Behind Steering Wheel)
6 — Speed Controls
7 — Switch Panel
8 — Uconnect System
9 — Climate Controls
10 — Glove Compartment

INTERIOR

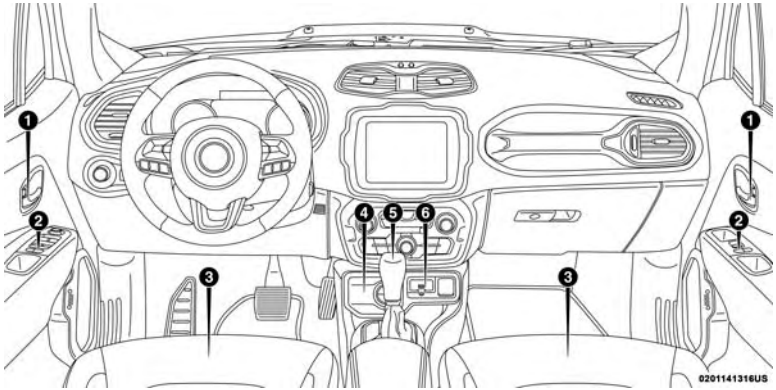

Interior Features

1 — Door Handles
2 — Door Locks / Window Switches
3 — Seats
4 — Selec-Terrain Switch
5 — Gear Selector
6 — AUX Jack

GETTING TO KNOW YOUR VEHICLE

CONTENTS

■ KEYS 17

□ Key Fob With Remote Control 17

■ IGNITION SWITCH 23

□ Models With Keyless Enter-N-Go — Passive Entry 23

■ REMOTE STARTING SYSTEM — IF EQUIPPED . . .24

□ How To Use Remote Start. 25

□ Remote Start Cancel Message — If Equipped 26

□ To Enter Remote Start Mode 26

□ To Exit Remote Start Mode Without Driving The Vehicle 26

□ To Exit Remote Start Mode And Drive The Vehicle 27

□ Remote Start Comfort Systems — If Equipped . . .27

□ Remote Start Windshield Wiper De–Icer And Rear Defrost Activation — If Equipped 27

□ General Information 27

■ SENTRY KEY 28

□ Key Programming 28

□ Replacement Keys 28

□ General Information 29

■ VEHICLE SECURITY ALARM — IF EQUIPPED . . .29

□ To Arm The System 30

□ To Disarm The System 30

□ Disabling 31

■ DOORS 31

□ Manual Door Locks 31

□ Power Door Locks 32

- Keyless Enter-N-Go — Passive Entry — If Equipped 33
- Automatic Unlock On Exit Feature — If Equipped 38
- Dead Lock Device — If Equipped 38
- Child Locks 39

■ SEATS 40
- Manual Front Seats 41
- Manual Rear Seat Adjustment 42
- Power Adjustment (Front) — If Equipped 44
- Heated Seats — If Equipped 46
- Unfolding The Rear Armrest 40/20/40 47

■ HEAD RESTRAINTS 48
- Front Head Restraints 48
- Rear Head Restraints 49

■ STEERING WHEEL 50
- Tilt/Telescoping Steering Column 50
- Heated Steering Wheel — If Equipped 50

■ MIRRORS 51
- Inside Day/Night Mirror 51
- Auto Dimming Mirror — If Equipped 52
- Outside Mirrors 52
- Folding Mirror 54
- Heated Mirrors — If Equipped 54
- Illuminated Vanity Mirrors — If Equipped 55

■ EXTERIOR LIGHTS 55
- Headlights 55
- Daytime Running Lights (DRL) — If Equipped . .56
- High Beams 56
- Flash-To-Pass 56
- Automatic Headlights — If Equipped 57
- Automatic High Beam Headlamp Control — If Equipped 57
- Parking Lights 58
- Headlight Delay 58

- Front Fog Lights — If Equipped 58
- Turn Signals 59

■ INTERIOR LIGHTS 59
- Courtesy Lights 59
- Cargo Area Lights 64

■ WIPERS AND WASHERS 64
- Front Wiper Operation 64
- Rain Sensing Wipers — If Equipped 65
- Rear Wiper Operation 67
- Windshield Wiper De-Icer — If Equipped 68

■ CLIMATE CONTROLS 69
- Air Outlet And Diffuser Locations — Passenger Compartment 70
- Manual Climate Controls Overview 71
- Automatic Climate Control Overview 75
- Operating Tips 83

■ WINDOWS 85
- Power Window Controls 85
- Auto-Down Feature 86
- Auto-Up Feature With Auto-Reverse Protection — If Equipped 87
- Reset Auto-Up 87
- Wind Buffeting 88

■ POWER MY SKY SUN ROOF — IF EQUIPPED . . .88
- Power My Sky Operation 88
- Emergency Open/Close 90
- Wind Buffeting 91

■ POWER GLASS SUNROOF WITH POWER SHADE — IF EQUIPPED 92
- Opening 93
- Closing 93
- Wind Buffeting 93
- Power Sun Shade 93
- Auto Reverse Feature 94
- Sunroof Maintenance 94

■ HOOD 95
□ To Open The Hood 95
□ To Close The Hood 96
■ LIFTGATE 97
□ Opening 97
□ Closing 98
□ Cargo Area Features. 99
■ INTERNAL EQUIPMENT 105
□ Glove Compartment. 105
□ Sun Visors 106
□ Power Outlets 108
□ Power Inverter — If Equipped 109
□ Cigar Lighter — If Equipped. 110
□ Ashtray — If Equipped. 111
□ Front Armrest 112
□ Cupholders 113
□ Handle Grip 114
■ ROOF LUGGAGE RACK — IF EQUIPPED 114

KEYS

Your vehicle uses a keyless ignition system. The ignition system consists of a key fob with Remote Keyless Entry (RKE) and a START/STOP push button ignition system. The Remote Keyless Entry system consists of a key fob and Keyless Enter-N-Go feature if equipped.

NOTE: The key fob may not be found if it is located next to a mobile phone, laptop or other electronic device; these devices may block the key fob's wireless signal.

Key Fob With Remote Control

The key fob with Remote Control contains a Remote Keyless Entry feature. The Remote Keyless Entry system allows you to lock or unlock the doors and liftgate or activate the Panic Alarm from distances up to approximately 66 ft (20 m) using a handheld key fob. The key fob does not need to be pointed at the vehicle to activate the system.

Key Fobs

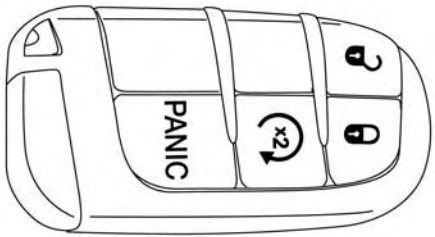

Keyless Ignition Key Fob

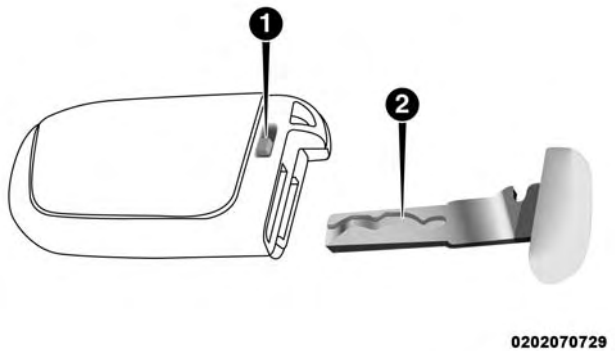

Key Fob Emergency Key Release

1 — Emergency Key Release Button
2 — Emergency Key

In case the ignition switch does not change with the push of a button, the key fob may have a low or fully depleted battery. A low key fob battery can be verified by referring to the instrument cluster, which will display directions to follow.

To Unlock The Doors And Liftgate

Push and release the unlock button on the key fob once to unlock the driver's door or twice within five seconds to unlock all doors and the liftgate.

All doors can be programmed to unlock on the first push of the unlock button. Refer to "Uconnect Settings" in "Multimedia" for further information.

NOTE: If the vehicle is unlocked by a key fob, and no door is opened within 60 seconds, the vehicle will re-lock and if equipped, the security alarm will arm.

The turn signal lights will flash to acknowledge the unlock signal. The illuminated entry system will be activated.

1st Push Of Key Fob Unlock Button

This feature lets you program the system to unlock either the driver's door or all doors on the first push of the unlock button on the key fob. To change the current setting, refer to "Uconnect Settings" in "Multimedia" for further information.

NOTE: If the vehicle is equipped with Passive Entry, refer to "Keyless Enter-N-Go — Passive Entry" located in "Doors" in "Getting To Know Your Vehicle" for further information.

To Lock The Doors And Liftgate

Push and release the lock button on the key fob to lock all doors and liftgate.

The turn signal lights will flash and the horn will chirp to acknowledge the signal. Refer to "Uconnect Settings" located in "Multimedia" for further programmable information.

If the vehicle is equipped with Passive Entry, refer to "Keyless Enter-N-Go — Passive Entry" located in "Doors" in "Getting To Know Your Vehicle" for further information.

Vehicles Equipped With Keyless Enter-N-Go — Passive Entry

If one or more doors are open, or the liftgate is open, the doors will lock. The doors will unlock again automatically if the key is left inside the passenger compartment, otherwise the doors will stay locked.

Replacing The Battery In The Key With Remote Control

The recommended replacement battery is one CR2032 battery.

NOTE:

- Perchlorate Material — special handling may apply. See www.dtsc.ca.gov/hazardouswaste/perchlorate for further information.
- Do not touch the battery terminals that are on the back housing or the printed circuit board.

1. Remove the emergency key by sliding the mechanical latch on the back of the key fob sideways with your thumb and pull the emergency key out with your other hand.

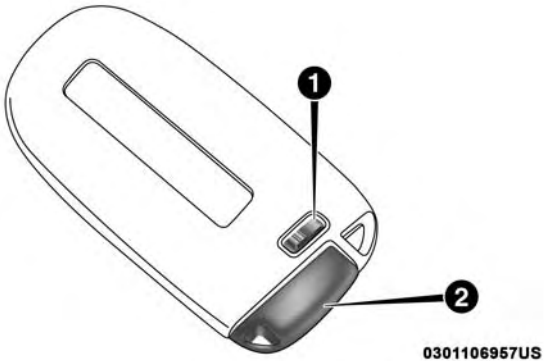

Emergency Key Removal

1 — Emergency Key Release Button
2 — Emergency Key

2. Separate the key fob halves using the tip of the emergency key, a #2 flat blade screwdriver, or a coin and gently pry the two halves of the key fob apart. Make sure not to damage the seal during removal.

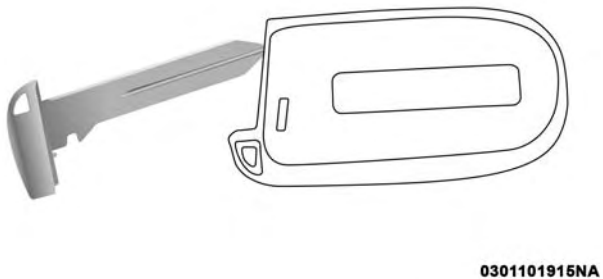

Emergency Key Removal

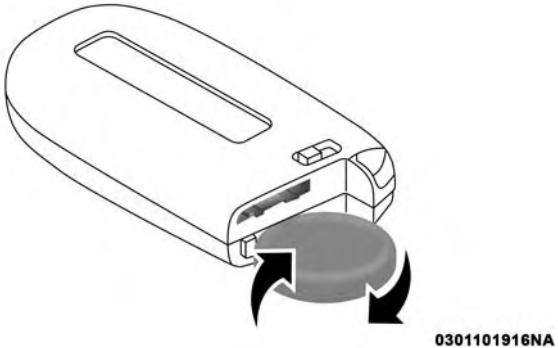

Separating Case With A Coin

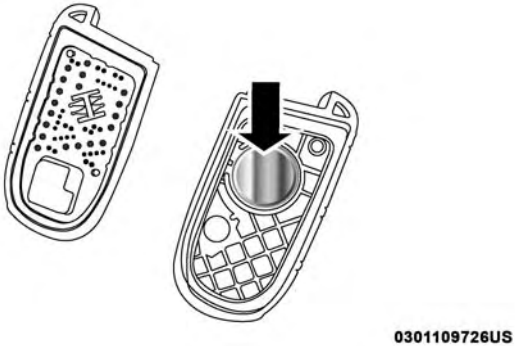

Key Fob Battery Replacement

3. Remove the battery by turning the back cover over (battery facing downward) and tapping it lightly on a solid surface such as a table or similar and replace the battery. When replacing the battery, match the + sign on the battery to the + sign on the inside of the battery clip, located on the back cover. Avoid touching the new battery with your fingers. Skin oils may cause battery deterioration. If you touch a battery, clean it with rubbing alcohol.

4. To assemble the key fob case, snap the two halves together.

Programming Additional Key Fobs

Programming the key fob may be performed by an authorized dealer.

Request For Additional Key Fobs

NOTE: Only key fobs that are programmed to the vehicle electronics can be used to start and operate the vehicle. Once a key fob is programmed to a vehicle, it cannot be programmed to any other vehicle.

WARNING!

- **Always remove the key fobs from the vehicle and lock all doors when leaving the vehicle unattended.**
- **Always remember to place the ignition in the OFF mode.**

Duplication of key fobs may be performed at an authorized dealer. This procedure consists of programming a blank key fob to the vehicle electronics. A blank key fob is one that has never been programmed.

NOTE:

- When having the Sentry Key Immobilizer System serviced, bring all vehicle keys with you to an authorized dealer.
- Keys must be ordered to the correct key cut to match the vehicle locks.

General Information

The following regulatory statement applies to all radio frequency (RF) devices equipped in this vehicle:

This device complies with Part 15 of the FCC Rules and with Industry Canada license-exempt RSS standard(s). Operation is subject to the following two conditions:

1. This device may not cause harmful interference, and
2. This device must accept any interference received, including interference that may cause undesired operation.

NOTE: Changes or modifications not expressly approved by the party responsible for compliance could void the user's authority to operate the equipment.

IGNITION SWITCH

Models With Keyless Enter-N-Go — Passive Entry

This feature allows the driver to operate the ignition switch with the push of a button as long as the key fob is in the passenger compartment.

The push button ignition has three operating positions. The three positions are OFF, ON, and RUN.

NOTE: If the ignition switch does not change with the push of a button, the key fob may have a low or dead battery. In this situation, a back up method can be used to operate the ignition switch. Put the nose side (side opposite of the emergency key) of the key fob against the ENGINE START/STOP button and push to operate the ignition switch.

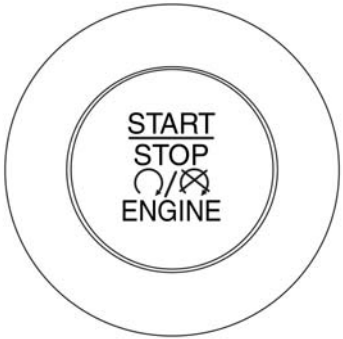

0302088265US

START/STOP Ignition Button

The push button ignition can be placed in the following positions:

OFF

- The engine is stopped.
- No electrical devices are available.

ON

- The vehicle is not running.
- Some electrical devices are available

RUN

- Driving position.
- All the electrical devices are available.

NOTE: The vehicle will not start if the key fob is located inside the cargo area and the liftgate is opened.

WARNING!

- **When leaving the vehicle, always remove the key fob from the vehicle and lock your vehicle.**
- **Never leave children alone in a vehicle, or with access to an unlocked vehicle.**
- **Allowing children to be in a vehicle unattended is dangerous for a number of reasons. A child or others could be seriously or fatally injured. Children should be warned not to touch the parking brake, brake pedal or the gear selector.**
- **Do not leave the key fob in or near the vehicle, or in a location accessible to children, and do not leave the ignition in the ON or RUN mode. A child could operate power windows, other controls, or move the vehicle.**

(Continued)

WARNING! *(Continued)*

- **Do not leave children or animals inside parked vehicles in hot weather. Interior heat build-up may cause serious injury or death.**

CAUTION!

An unlocked vehicle is an invitation for thieves. Always remove key fob from the vehicle and lock all doors when leaving the vehicle unattended.

NOTE: For further information, refer to "Starting The Engine," in "Starting And Operating".

REMOTE STARTING SYSTEM — IF EQUIPPED

This system uses the key fob to start the engine conveniently from outside the vehicle while still maintaining security. The system has a range of approximately 328ft (100m).

NOTE:

- The vehicle must be equipped with an automatic transmission to be equipped with Remote Start.
- Obstructions between the vehicle and key fob may reduce this range.

How To Use Remote Start

- Push Remote Start button on the key fob twice within five seconds. Pushing the Remote Start button a third time shuts the engine off.
- To drive the vehicle, push unlock button, and place the ignition in the ON/RUN position.
- With remote start, the engine will only run for 15 minutes (timeout) unless the ignition key is placed in the ON/RUN position.
- The vehicle must be started with the key after two consecutive timeouts.

All of the following conditions must be met before the engine will remote start:

- Gear Selector in PARK
- Doors closed
- Hood closed
- Liftgate closed
- Hazard switch off
- Brake switch inactive (brake pedal not pushed)
- Battery at an acceptable charge level
- PANIC button not pushed
- System not disabled from previous remote start event
- Vehicle alarm system indicator flashing
- Ignition in STOP/OFF position
- Fuel level meets minimum requirement

WARNING!

- **Do not start or run an engine in a closed garage or confined area. Exhaust gas contains Carbon Monoxide (CO) which is odorless and colorless. Carbon Monoxide is poisonous and can cause serious injury or death when inhaled.**
- **Keep key fobs away from children. Operation of the Remote Start System, windows, door locks or other controls could cause serious injury or death.**

Remote Start Cancel Message — If Equipped

The following messages will display in the instrument cluster if the vehicle fails to remote start or exits remote start prematurely:

- Remote Start Cancelled — Door Open
- Remote Start Cancelled — Hood Open
- Remote Start Cancelled — Fuel Low
- Remote Start Cancelled — Liftgate Open
- Remote Start Cancelled — Too Cold
- Remote Start Cancelled — Time Expired
- Remote Start Disabled — Start Vehicle To Reset

The message will stay active until the ignition is placed in the ON/RUN position.

To Enter Remote Start Mode

Push and release the Remote Start button on the key fob twice within five seconds. The vehicle doors will lock, the turn signals will flash twice, and the horn will chirp. Then the engine will start, and the vehicle will remain in the Remote Start mode for a 15-minute cycle.

NOTE:

- If an engine fault is present or fuel level is low, the vehicle will start and then shut down in 10 seconds.
- The park lamps will turn on and remain on during Remote Start mode.
- For security, power window operation is disabled when the vehicle is in the Remote Start mode.
- The engine can be started two consecutive times (two 15-minute cycles) with the key fob. However, the ignition must be placed in the ON/RUN position before you can repeat the start sequence for a third cycle.

To Exit Remote Start Mode Without Driving The Vehicle

Push and release the remote start button one time or allow the engine to run for the entire 15-minute cycle.

NOTE: To avoid unintentional shut downs, the system will disable the one time push of the remote start button for two seconds after receiving a valid remote start request.

To Exit Remote Start Mode And Drive The Vehicle

Before the end of 15-minute cycle, push and release the unlock button on the key fob to unlock the doors, or unlock the vehicle using Keyless Enter-N-Go — Passive Entry via the door handles, and disarm the vehicle security alarm (if equipped). Then, prior to the end of the 15-minute cycle, push and release the START/STOP button.

NOTE: For vehicles equipped with the Keyless Enter-N-Go — Passive Entry feature, the message "Remote Start Active — Push Start Button" will display in the instrument cluster display until you push the ignition START button.

Remote Start Comfort Systems — If Equipped

When Remote Start is activated, the heated steering wheel and driver heated seat features will automatically activate when ambient temperature is less than 40° F (4.4° C). These features will stay on through the duration of Remote Start.

Refer to "Uconnect Settings" in "Multimedia" for further information.

Remote Start Windshield Wiper De–Icer And Rear Defrost Activation — If Equipped

When remote start is active and the outside ambient temperature is less than 40°F (4.4°C), the Windshield Wiper De-Icer and the Rear Defrost will be enabled. Exiting remote start will resume previous operation, except if the Windshield Wiper De-Icer is active. The Windshield Wiper De-Icer timer and operation will continue.

Refer to "Uconnect Settings" in "Multimedia" for further information.

General Information

The following regulatory statement applies to all radio frequency (RF) devices equipped in this vehicle:

This device complies with Part 15 of the FCC Rules and with Industry Canada license-exempt RSS standard(s). Operation is subject to the following two conditions:

1. This device may not cause harmful interference, and
2. This device must accept any interference received, including interference that may cause undesired operation.

NOTE: Changes or modifications not expressly approved by the party responsible for compliance could void the user's authority to operate the equipment.

SENTRY KEY

The Sentry Key Immobilizer system prevents unauthorized vehicle operation by disabling the engine. The system does not need to be armed or activated. Operation is automatic, regardless of whether the vehicle is locked or unlocked.

The system uses a key fob, keyless push button ignition and a RF receiver to prevent unauthorized vehicle operation. Therefore, only key fobs that are programmed to the vehicle can be used to start and operate the vehicle. The system will not allow the engine to crank if an invalid key fob is used to start and operate the vehicle. The system will shut the engine off in two seconds if an invalid key fob is used to start the engine.

After turning the ignition switch to the ON/RUN position, the vehicle security light will turn on for three seconds for a bulb check. If the light remains on after the bulb check, it indicates that there is a problem with the electronics. In addition, if the light begins to flash after the bulb check, it indicates that someone used an invalid key fob to start the engine. Either of these conditions will result in the engine being shut off after two seconds.

If the vehicle security light turns on during normal vehicle operation (vehicle running for longer than ten seconds), it indicates that there is a fault in the electronics. Should this occur, have the vehicle serviced as soon as possible by an authorized dealer.

CAUTION!

The Sentry Key Immobilizer system is not compatible with some aftermarket remote starting systems. Use of these systems may result in vehicle starting problems and loss of security protection.

All of the key fobs provided with your new vehicle have been programmed to the vehicle electronics.

Key Programming

Key fob programming is performed at an authorized dealer.

Replacement Keys

NOTE: Only key fobs that are programmed to the vehicle electronics can be used to start and operate the vehicle. Once a key fob is programmed to a vehicle, it cannot be programmed to any other vehicle.

CAUTION!

- **Always remove the key fobs from the vehicle and lock all doors when leaving the vehicle unattended.**
- **For vehicles equipped with Keyless Enter-N-Go — Ignition, always remember to place the ignition in the OFF position.**

NOTE: Duplication of key fobs may be performed at an authorized dealer. This procedure consists of programming a blank key fob to the vehicle electronics. A blank key fob is one that has never been programmed.

When having the Sentry Key Immobilizer System serviced, bring all vehicle keys with you to an authorized dealer.

General Information

The following regulatory statement applies to all radio frequency (RF) devices equipped in this vehicle:

This device complies with Part 15 of the FCC Rules and with Industry Canada license-exempt RSS standard(s). Operation is subject to the following two conditions:

1. This device may not cause harmful interference, and
2. This device must accept any interference received, including interference that may cause undesired operation.

NOTE: Changes or modifications not expressly approved by the party responsible for compliance could void the user's authority to operate the equipment.

VEHICLE SECURITY ALARM — IF EQUIPPED

The vehicle security alarm monitors the vehicle doors, hood, liftgate, and the Keyless Enter-N-Go — Ignition for unauthorized operation. While the vehicle security alarm is armed, interior switches for door locks and liftgate release are disabled. If something triggers the alarm, the vehicle security alarm will provide the following audible and visible signals:

- The horn will pulse.
- The turn signals will flash.
- The vehicle security light in the instrument cluster will flash.

To Arm The System

Follow these steps to arm the vehicle security alarm:

1. Make sure the vehicle's ignition is placed in the "OFF" mode.
2. Perform one of the following methods to lock the vehicle:
   - Push the lock button on the interior power door lock switch with the driver and/or passenger door open.
   - Push the lock button on the exterior Passive Entry Door Handle with a valid key fob available in the same exterior zone (refer to "Doors" in "Getting To Know Your Vehicle" for further information).
   - Push the lock button on the key fob.
3. If any doors are open, close them.

To Disarm The System

The vehicle security alarm can be disarmed using any of the following methods:

- Push the unlock button on the key fob.
- Grasp the passive entry door handle to unlock the door, refer to "Doors" in "Getting To Know Your Vehicle" for further information.
- Cycle the ignition out of the off mode to disarm the system.

NOTE:

- The driver's door key cylinder and the liftgate button on the key fob cannot arm or disarm the vehicle security alarm.
- The vehicle security alarm remains armed during liftgate entry. If someone enters the vehicle through the liftgate and opens any door, the alarm will sound.
- When the vehicle security alarm is armed, the interior power door lock switches will not unlock the doors.

The vehicle security alarm is designed to protect your vehicle. However, you can create conditions where the system will give you a false alarm. If one of the previously described arming sequences has occurred, the vehicle security alarm will arm, regardless of whether you are in the vehicle or not. If you remain in the vehicle and open a door, the alarm will sound. If this occurs, disarm the vehicle security alarm.

If the vehicle security alarm is armed and the battery becomes disconnected, the vehicle security alarm will remain armed when the battery is reconnected; the exterior lights will flash, and the horn will sound. If this occurs, disarm the vehicle security alarm.

Disabling

To completely disable the alarm (e.g. in the case of long inactivity of the car), lock the doors by turning the vehicle key in the exterior door lock cylinder.

NOTE: If the batteries in the key fob discharge in the event of a failure to the system or to switch off the alarm, place the ignition in the ON/RUN position.

DOORS

Manual Door Locks

To lock each door, rotate the door lock button on each door trim panel forward. To unlock the doors, pull the inside door handle to the first detent or rotate the door lock button until the lock symbol is no longer visible.

If the lock symbol is visible when the door is shut, the door will lock. Therefore, make sure the key fob is not inside the vehicle before closing the door.

All doors and the tailgate can be programmed to unlock on the use of one of the front door interior handles. Refer to "Uconnect Settings" in "Multimedia" for further information on programming locking and unlocking preferences.

Locking/Unlocking Doors From Outside

With the doors closed, insert the key blade into the driver exterior door lock cylinder and turn to the right to lock the driver's door.

To unlock the driver's door, insert the key blade into the driver exterior door lock cylinder and turn to the left to unlock the driver's door.

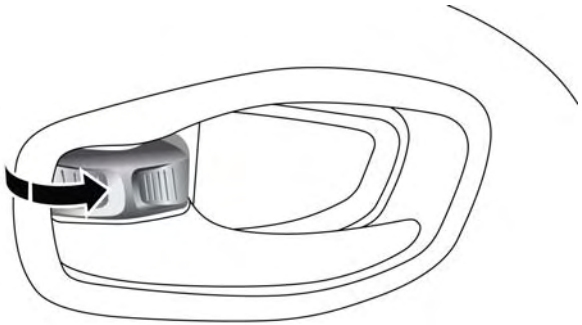

Manual Door Lock

NOTE: The manual lock knob unlocks each individual door separately.

WARNING!

- **For personal security and safety in the event of a collision, lock the vehicle doors before you drive as well as when you park and leave the vehicle.**
- **When leaving the vehicle, always remove the key fob from the vehicle and lock your vehicle. Always make sure the ignition is in "OFF" mode, remove the key fob from the vehicle and lock the vehicle. Unsupervised use of vehicle equipment may cause severe personal injuries or death.**
- **Never leave children alone in a vehicle, or with access to an unlocked vehicle. Allowing children to be in a vehicle unattended is dangerous for a number of reasons. A child or others could be seriously or fatally injured. Children should be warned not to touch the parking brake, brake pedal or the gear selector.**
- **Do not leave the key fob in or near the vehicle, or in a location accessible to children, and do not leave the ignition in the ON or RUN mode. A child could operate power windows, other controls, or move the vehicle.**

Power Door Locks

A power door lock switch is located on each of the front door trim panels. Use this switch to lock or unlock the doors, liftgate and fuel door.

NOTE: The key fob may not be able to be detected by the vehicle keyless-go system if it is located next to a mobile phone, laptop or other electronic device; these devices may block the key fob's wireless signal and prevent the keyless-go system from starting the vehicle.

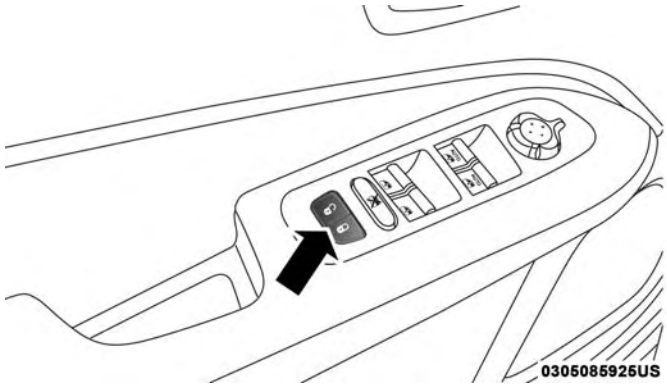

Power Door Lock Switch

The doors can also be locked and unlocked with the Keyless Enter-N-Go — Passive Entry system if equipped. Refer to "Keyless Enter-N-Go — Passive Entry" located in "Doors" of "Getting To Know Your Vehicle" for further information.

Keyless Enter-N-Go — Passive Entry — If Equipped

The Passive Entry system is an enhancement to the vehicle's Remote Keyless Entry system and a feature of Keyless Enter-N-Go. This feature allows you to lock and unlock the vehicle's door(s) without having to push the key fob lock or unlock buttons.

NOTE:

- Passive Entry can be enabled or disabled. Refer to "Uconnect Settings" in "Multimedia" for further information.
- If wearing gloves on your hands, or if it has been raining/snowing on the Passive Entry door handle, the unlock sensitivity can be affected, resulting in a slower response time.
- If the vehicle is unlocked by the Passive Entry Door Handle, and no door is opened within 60 seconds, the vehicle will re-lock and if equipped, the security alarm will arm.
- The key fob may not be able to be detected by the vehicle keyless-go system if it is located next to a mobile phone, laptop or other electronic device; these devices may block the key fob's wireless signal and prevent the keyless-go system from starting the vehicle.

To Unlock From The Driver's Side

With a valid Passive Entry key fob within 5 ft (1.5 m) of the driver's door handle, grab the front driver door handle to unlock the driver's door automatically.

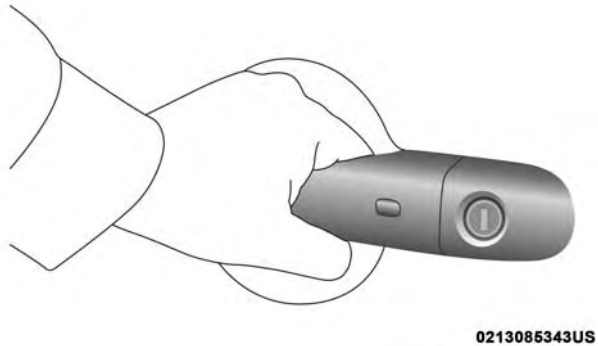

Grab The Door Handle To Unlock

NOTE: If "Unlock All Doors 1st Press" is programmed, all doors will unlock when you grab hold of the front driver's door handle. To select between "Unlock Driver Door 1st Press" and "Unlock All Doors 1st Press," refer to "Uconnect Settings" in "Multimedia" for further information.

To Unlock From The Passenger Side

With a valid Passive Entry key fob within 5 ft (1.5 m) of the passenger door handle, grab the front passenger door handle to unlock all four doors and the liftgate automatically.

NOTE: All doors will unlock when the front passenger door handle is grabbed regardless of the driver's door unlock preference setting ("Unlock Driver Door 1st Press" or "Unlock All Doors 1st Press").

To Lock The Vehicle's Doors And Liftgate

With one of the vehicle's Passive Entry key fobs within 5 ft (1.5 m) of the driver or passenger front door handles, push the door handle lock button to lock all four doors.

Do NOT grab the door handle when pushing the door handle lock button. This could unlock the door(s).

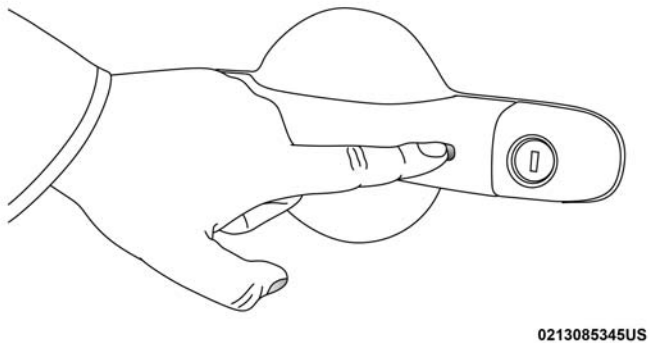

Push The Door Handle Button To Lock

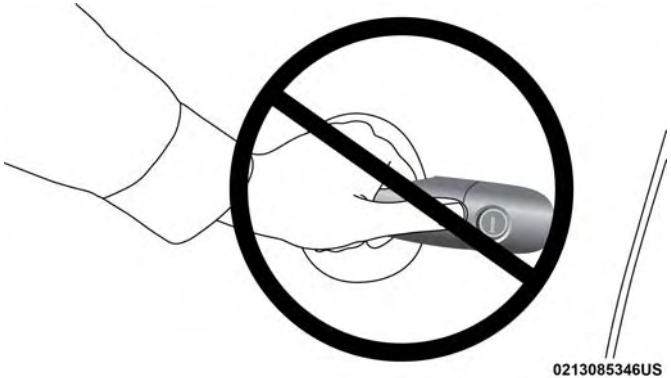

DO NOT Grab The Door Handle When Locking

NOTE: The Passive Entry system will not operate if the key fob battery is dead.

The vehicle doors can also be locked by using the lock button located on the vehicle's interior door panel.

Preventing Inadvertent Locking Of Passive Entry Key Fob In Vehicle (FOBIK-Safe)

To minimize the possibility of unintentionally locking a Passive Entry key fob inside your vehicle, the Passive Entry system is equipped with an automatic door unlock feature. FOBIK-Safe only executes in vehicles with Passive Entry. There are three situations that trigger a FOBIK-Safe search in any Passive Entry vehicle:

1. A lock request is made by a valid Passive Entry key fob while a door is open.
2. A lock request is made by the Passive Entry door handle while a door is open.
3. A lock request is made by the door panel switch while the door is open.

When any of these situations occur, after all open doors are shut, the FOBIK-Safe search will be executed. If it finds a Passive Entry key fob inside the car, and it does not find any Passive Entry key fobs outside the car, then the car will unlock and alert the customer.

NOTE: The vehicle will only unlock the doors when a valid Passive Entry key fob is detected inside the vehicle, and no valid Passive Entry key fob is detected outside the vehicle. The vehicle will not unlock the doors when any of the following conditions are met:

- The doors are manually locked using the door lock knobs.
- There is a valid Passive Entry key fob outside the vehicle and within 5 ft (1.5 m) of either Passive Entry door handle.

To Unlock/Enter The Liftgate

The liftgate Passive Entry unlock feature is built into the electronic liftgate release. With a valid Passive Entry key fob within 5 ft (1.5 m) of the liftgate, push the Electronic Liftgate release to open with one fluid motion.

To Lock The Liftgate

With a valid Passive Entry key fob within 5ft (1.5 m) of the liftgate, push the Passive Entry lock button located to the right of electronic liftgate release.

NOTE:

- The liftgate Passive Entry lock button will lock the liftgate and the doors. The liftgate unlock feature is built into the Electronic Liftgate release.
- If “Unlock All Doors 1st Press” is programmed in the instrument cluster display, if equipped, only the liftgate will unlock when you push the Electronic Release. If ″Unlock Driver Door 1st Press″ is programmed in Uconnect, the liftgate will unlock when you push the electronic unlock/lock button on the liftgate. For further information, refer to “Uconnect Settings” in “Multimedia.”

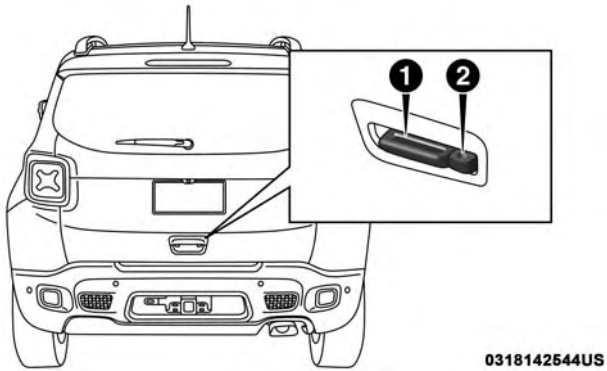

Liftgate Release/Passive Entry

1 — Liftgate Handle
2 — Liftgate Passive Entry Location

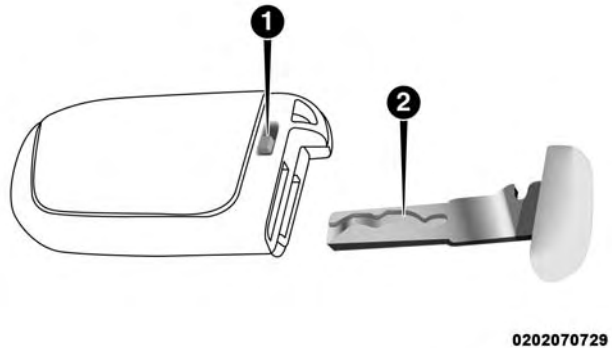

Emergency Key Release

1 — Emergency Key Release Button
2 — Emergency Key

Emergency Unlocking Driver Door

If the key fob battery is low or dead, the emergency key can be used to unlock the driver side door lock cylinder.

To release the emergency key, proceed as follows:

1. Slide the emergency key release button to the side.
2. Remove the emergency key from the key fob with Remote Control housing.

NOTE: The Emergency Key can be inserted into the door lock cylinder from either direction.

WARNING!

- **Never leave children alone in a vehicle, or with access to an unlocked vehicle. Allowing children to be in a vehicle unattended is dangerous for a number of reasons. A child or others could be severely injured or killed. Children should be warned not to touch the parking brake, brake pedal, or the gear selector. Do not leave the key fob in or near the vehicle, or in a location accessible to children, and do not leave the ignition in the ON or RUN mode. A child could start the vehicle, operate power windows, other controls, or move the vehicle.**
- **Do not leave children or animals inside parked vehicles in hot weather. Interior heat buildup may cause them to be severely injured or killed**

General Information

The following regulatory statement applies to all radio frequency (RF) devices equipped in this vehicle:

This device complies with Part 15 of the FCC Rules and with Industry Canada license-exempt RSS standard(s). Operation is subject to the following two conditions:

1. This device may not cause harmful interference, and
2. This device must accept any interference received, including interference that may cause undesired operation.

NOTE: Changes or modifications not expressly approved by the party responsible for compliance could void the user's authority to operate the equipment.

Automatic Unlock On Exit Feature — If Equipped

If Auto Unlock is enabled, this feature will unlock all the doors when any door is opened if the vehicle is stopped and in PARK.

Refer to "Uconnect Settings" in "Multimedia" for further information.

Dead Lock Device — If Equipped

The Dead Lock Device is a safety device that prevents the use of the internal door handles of the vehicle and the power door lock switch.

This device prevents the doors from opening within the passenger compartment.

Arming The Dead Lock Device

- The device works on all doors and requires two presses of the lock button on the key fob. For vehicles equipped with Passive Entry, the device will also work by pushing the lock button on the driver's or passenger's side exterior door handle.
- The arming of the device is indicated by three flashes of the direction indicators.
- The device does not operate if one or more doors are not properly closed.

Disarming The Device

- The device will automatically disarm by pushing the unlock button on the key fob. For vehicles equipped with Passive Entry, the device will also disarm by using the driver's or passenger's side exterior door handle to unlock and open the door.
- Placing the ignition in the ON or RUN position.

Child Locks

To provide a safer environment for small children riding in the rear seats, the rear doors are equipped with a Child-Protection Door Lock system.

To use the system, open each rear door, use a flat blade screwdriver (or ignition key) and rotate the dial to the lock or unlock position. When the system on a door is engaged, that door can only be opened by using the outside door handle even if the inside door lock is in the unlocked position.

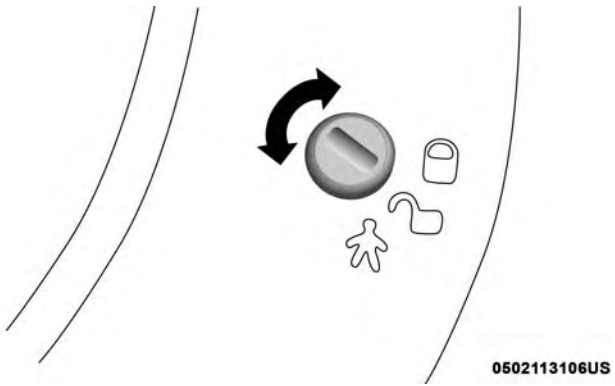

Child-Protection Door Lock Location

NOTE:

- When the child lock system is engaged, the door can only be opened by using the outside door handle even though the inside door lock is in the unlocked position.
- After disengaging the Child-Protection Door Lock system, always test the door from the inside to make certain it is in the desired position.
- After engaging the Child-Protection Door Lock system, always test the door from the inside to make certain it is in the desired position.
- For emergency exit with the system engaged, rotate the lock/unlock dial to the unlocked position, roll down the window, and open the door with the outside door handle.

WARNING!

Avoid trapping anyone in a vehicle in a collision. Remember that the rear doors can only be opened from the outside when the Child-Protection locks are engaged (locked).

SEATS

Seats are a part of the Occupant Restraint System of the vehicle.

WARNING!

- **It is dangerous to ride in a cargo area, inside or outside of a vehicle. In a collision, people riding in these areas are more likely to be seriously injured or killed.**
- **Do not allow people to ride in any area of your vehicle that is not equipped with seats and seat belts. In a collision, people riding in these areas are more likely to be seriously injured or killed.**
- **Be sure everyone in your vehicle is in a seat and using a seat belt properly.**

Manual Front Seats

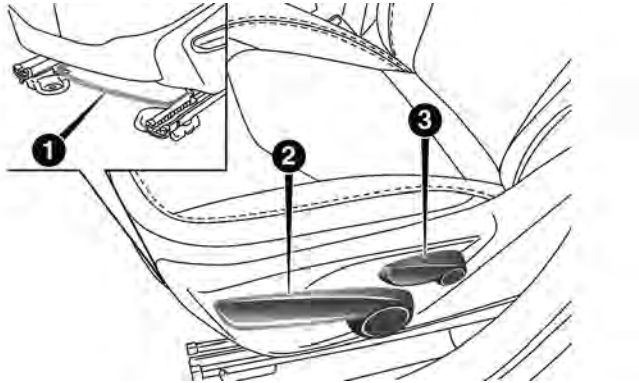

Manual Seat Adjustment Levers

1 — Forward/Rearward Adjustment Bar
2 — Seat Height Adjustment Lever
3 — Recline Lever

WARNING!

- **Adjusting a seat while the vehicle is moving is dangerous. The sudden movement of the seat could cause you to lose control. The seat belt might not be adjusted properly and you could be injured. Adjust the seat only while the vehicle is parked.**
- **Do not ride with the seatback reclined so that the shoulder belt is no longer resting against your chest. In a collision you could slide under the seat belt and be seriously or even fatally injured. Use the recliner only when the vehicle is parked.**

Manual Front Seats Forward/Rearward Adjustment

On models equipped with manual seats, the adjusting bar is located at the front of the seats, near the floor. While sitting in the seat, lift up on the bar and move the seat forward or rearward. Release the bar once you have reached the desired position. Then, using body pressure, move forward and rearward on the seat to be sure that the seat adjusters have latched.

Height Adjustment

The driver's seat height can be raised or lowered by using a lever, located on the outboard side of the seat. Pull upward on the lever to raise the seat height or push downward on the lever to lower the seat height.

Manual Recline Adjustment

To adjust the seatback, lift the lever located on the outboard side of the seat, lean back to the desired position and release the lever. To return the seatback, lift the lever, lean forward and release the lever.

Manual Rear Seat Adjustment

WARNING!

Do not pile luggage or cargo higher than the top of the seatback. This could impair visibility or become a dangerous projectile in a sudden stop or collision.

Split Rear Seats

The split rear seat has the ability to fold flat which increases the storage of the rear cargo area.

NOTE:

- Prior to folding the rear seat down, it may be necessary to position the front seat to its mid-track position. Be sure that the front seats are fully upright and positioned forward, this will allow the rear seat to fold down easily.
- Prior to folding the rear seat, you must secure the rear armrest in the upright position.
- You may experience deformation in the seat cushion from the seat belt buckles if the seats are left folded for an extended period of time. This is normal and by simply opening the seats to the open position, over time the seat cushion will return to its normal shape.

WARNING!

- **It is extremely dangerous to ride in a cargo area, inside or outside of a vehicle. In a collision, people riding in these areas are more likely to be seriously injured or killed.**
- **Do not allow people to ride in any area of your vehicle that is not equipped with seats and seat belts.**
- **Be sure everyone in your vehicle is in a seat and using a seat belt properly.**

Cargo Area Enlargement

Folding both sides of the rear seat provides additional storage in the rear cargo area.

Proceed as follows:

1. Fully lower the rear seat head restraints.
2. Move the safety belts to the outboard side of the seat.
3. Pull the seatback release lever to fold both sides of the rear seatbacks completely forward.

Partial Enlargement Of The Cargo Area

Enlargement of the left side of the cargo area allows you to carry a single passenger on the right side of the rear seat, while the enlargement of the right side allows you to carry two passengers.

Proceed as follows:

1. Remove the rear shelf (if equipped). Refer to "Removable Rear Shelf" in "Cargo Area Features" for details.
2. Fully lower the rear seat head restraints.
3. Move the safety belts to the outboard side of the seat and rest them on the seat belt guide.
4. Pull the seatback release lever to fold the left or right rear seatback completely forward.

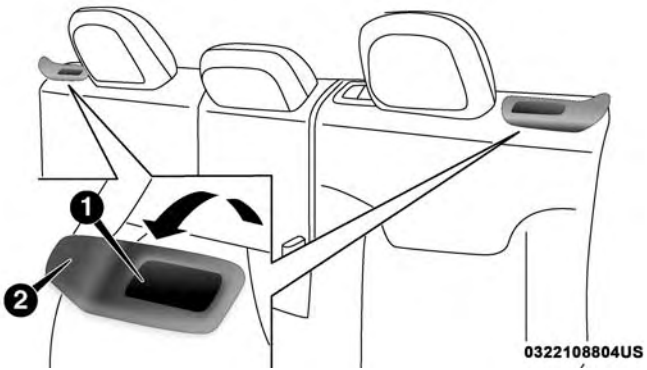

Rear Seat Release

1 — Seatback Release Lever
2 — Seat Belt Guide

Seatback Repositioning

NOTE: If interference from the cargo area prevents the seatback from fully locking, you will have difficulty returning the seat to its proper position.

1. Move the safety belts to the seat belt guides on the top edge of the seat to ensure the seatbacks properly latch.

2. Lift the seatbacks, pushing them back until they lock on both the latches. Verify the red notches are no longer visible on the release lever. If the red notches are visible, the seatback is not secure.

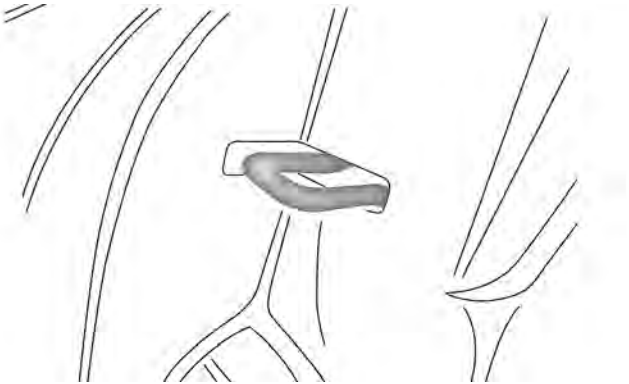

Rear Seat Latch

Power Adjustment (Front) — If Equipped

The power seat controls are located on the outboard side of the seat, close to the floor.

Use the switch to move the seat up/down, forward/rearward, tilt (if equipped) and to set the angle of the seatback.

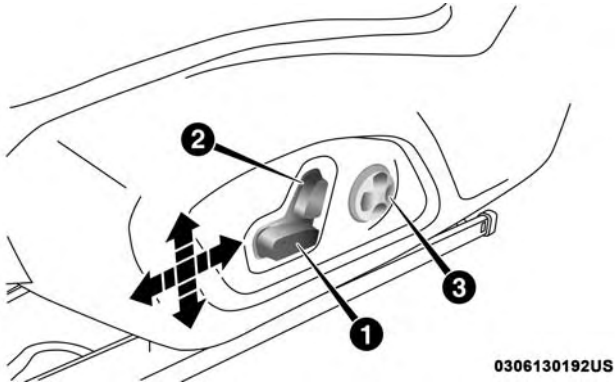

Power Seat Switches

1 — Power Seat Switch
2 — Power Recline Switch
3 — Power Lumbar Switch

Adjusting The Seat Forward Or Rearward

The seat can be adjusted both forward and rearward. Push the seat switch forward or rearward. The seat will move in the direction of the switch. Release the switch when the desired position has been reached.

Adjusting The Seat Up Or Down

The height of the seats can be adjusted up or down. Pull upward or push downward on the seat switch; the seat will move in the direction of the switch. Release the switch when the desired position has been reached.

Tilting The Seat Up Or Down — If Equipped

The angle of the seat cushion can be adjusted up or down. Pull upward or push downward on the front of the seat switch. The front of the seat cushion will move in the direction of the switch. Release the switch when the desired position has been reached.

Reclining The Seatback

The angle of the seatback can be adjusted forward or rearward. Push the seatback switch forward or rearward, the seat will move in the direction of the switch. Release the switch when the desired position is reached.

WARNING!

- **Adjusting a seat while driving may be dangerous. Moving a seat while driving could result in loss of control which could cause a collision and serious injury or death.**

(Continued)

WARNING! *(Continued)*

- **Seats should be adjusted before fastening the seat belts and while the vehicle is parked. Serious injury or death could result from a poorly adjusted seat belt.**
- **Do not ride with the seatback reclined so that the shoulder belt is no longer resting against your chest. In a collision you could slide under the seat belt, which could result in serious injury or death.**

CAUTION!

Do not place any article under a power seat or impede its ability to move as it may cause damage to the seat controls. Seat travel may become limited if movement is stopped by an obstruction in the seat's path.

Power Lumbar Adjustment— If Equipped

Push the switch forward or rearward to increase or decrease the lumbar support. Push the switch upward or downward to raise or lower the lumbar support.

NOTE: Power seat adjustments are only allowed when the ignition device is turned to ON, and for about 30 minutes after it is turned to OFF.

Heated Seats — If Equipped

The heated seat buttons are located in your vehicle's touchscreen.

You can choose between two heating levels:

- Press the heated seat button once to turn the HI setting on.
- Press the heated seat button a second time to turn the LO setting on.
- Press the heated seat button a third time to turn the heating elements off.

If the HI-level setting is selected, the system will automatically switch to LO-level after approximately 145 minutes of continuous operation. At that time, the display will change from HI to LO, indicating the change. The LO-level setting will turn off automatically after approximately 60 minutes.

NOTE: The engine must be running for the heated seats to operate.

Auto Comfort Systems — If Equipped

In vehicles equipped with Auto On Comfort, when turning on the vehicle the driver's heated seat will automatically turn on when temperatures are below 40° F (4.4° C).

Auto Comfort Systems can be enabled or disabled. Refer to "Uconnect Settings" in "Multimedia" for further information.

WARNING!

- **Persons who are unable to feel pain to the skin because of advanced age, chronic illness, diabetes, spinal cord injury, medication, alcohol use, exhaustion or other physical condition must exercise care when using the seat heater. It may cause burns even at low temperatures, especially if used for long periods of time.**
- **Do not place anything on the seat or seatback that insulates against heat, such as a blanket or cushion. This may cause the seat heater to overheat. Sitting in a seat that has been overheated could cause serious burns due to the increased surface temperature of the seat.**

Unfolding The Rear Armrest 40/20/40

Tilt the head restraint forward and pull the rear armrest tab to release it from the seat and pull forward.

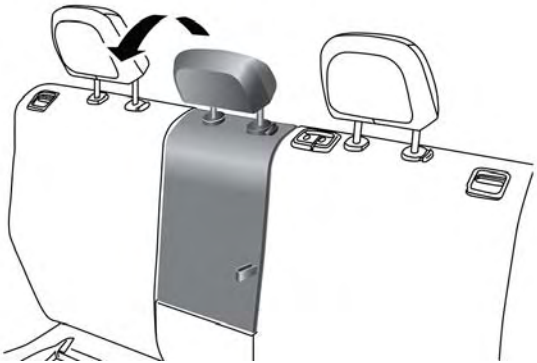

Rear Seat Center Armrest — If Equipped

The center part of the rear seat can also be used as rear armrest with cupholders.

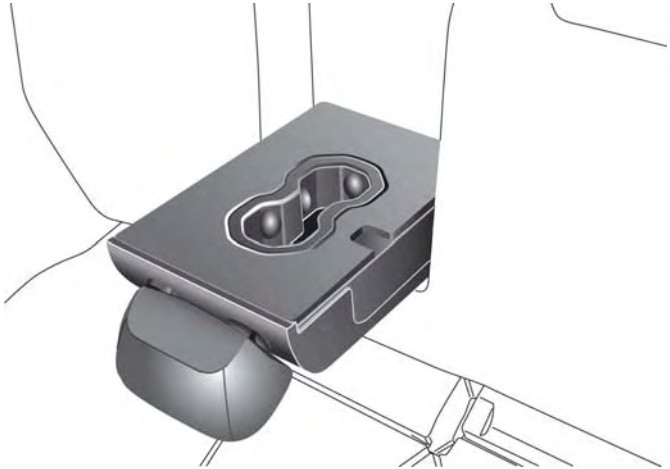

Rear Armrest

WARNING!

Be certain that the seatback is securely locked into position. If the seatback is not securely locked into position the seat will not provide the proper stability for child seats and/or passengers. An improperly latched seat could cause serious injury.

HEAD RESTRAINTS

Head restraints are designed to reduce the risk of injury by restricting head movement in the event of a rear impact. Head restraints should be adjusted so that the top of the head restraint is located above the top of your ear.

WARNING!

- **All occupants, including the driver, should not operate a vehicle or sit in a vehicle's seat until the head restraints are placed in their proper positions in order to minimize the risk of neck injury in the event of a crash.**
- **Head restraints should never be adjusted while the vehicle is in motion. Driving a vehicle with the head restraints improperly adjusted or removed could cause serious injury or death in the event of a collision.**

Front Head Restraints

Your vehicle is equipped with front driver and passenger head restraints.

To raise the head restraint, pull upward on the head restraint. To lower the head restraint, push the adjustment button, located at the base of the head restraint, and push downward on the head restraint.

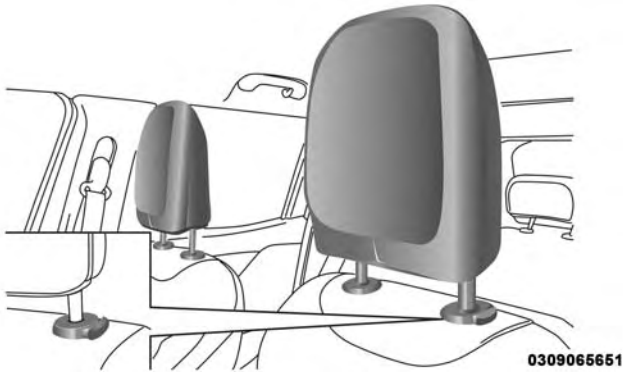

Head Restraint Adjustment Button

NOTE: The head restraints should only be removed by qualified technicians, for service purposes only. If either of the head restraints require removal, see an authorized dealer.

WARNING!

- **All occupants, including the driver, should not operate a vehicle or sit in a vehicle's seat until the head restraints are placed in their proper positions in order to minimize the risk of neck injury in the event of a crash.**
- **Head restraints should never be adjusted while the vehicle is in motion. Driving a vehicle with the head restraints improperly adjusted or removed could cause serious injury or death in the event of a collision.**

Rear Head Restraints

Your vehicle is equipped with two outboard head restraints and one center head restraint for its rear passengers. The rear head restraints can be raised or lowered. When the center seat is being occupied, the head restraint should be in the raised position. When there are no occupants in the center seat, the head restraint can be lowered for maximum visibility for the driver.

To raise the head restraint, pull upward on the head restraint.

To lower the head restraint, push the adjustment button, located at the base of the head restraint, and push downward on the head restraint.

Adjustment Button

NOTE: The head restraints should only be removed by qualified technicians, for service purposes only. If either of the head restraints require removal, see an authorized dealer.

STEERING WHEEL

Tilt/Telescoping Steering Column

This feature allows you to tilt the steering column upward or downward. It also allows you to lengthen or shorten the steering column. The tilt/telescoping lever is located below the steering wheel at the end of the steering column.

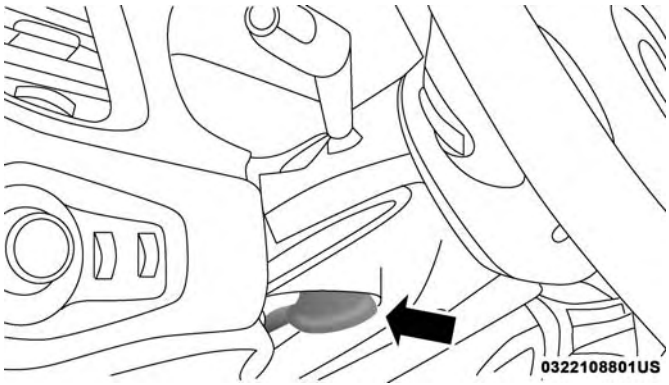

Tilt/Telescoping Lever

To unlock the steering column, push the tilt/telescoping lever downward (toward the floor). To tilt the steering column, move the steering wheel upward or downward as desired. To lengthen or shorten the steering column, pull the steering wheel outward or push it inward as desired.

To lock the steering column in position, pull the tilt/telescoping lever upward until fully engaged.

WARNING!

Do not adjust the steering column while driving. Adjusting the steering column while driving or driving with the steering column unlocked, could cause the driver to lose control of the vehicle. Failure to follow this warning may result in serious injury or death.

Heated Steering Wheel — If Equipped

The steering wheel contains a heating element that helps warm your hands in cold weather. The heated steering wheel has only one temperature setting. Once the heated steering wheel switch has been turned on, it will stay on for an average of 80 minutes or more before automatically shutting off. This time will vary based on environmental temperatures. The heated steering wheel can shut off early or may not turn on when the steering wheel is already warm. The heated steering wheel control button is located in your vehicle's touchscreen.

Auto Comfort Systems — If Equipped

In vehicles equipped with Auto On Comfort, when turning on the vehicle the heated steering wheel will automatically turn on when temperatures are below 40° F (4.4° C).

Auto Comfort Systems can be enabled or disabled. Refer to "Uconnect Settings" in "Multimedia" for further information.

WARNING!

- **Persons who are unable to feel pain to the skin because of advanced age, chronic illness, diabetes, spinal cord injury, medication, alcohol use, exhaustion, or other physical conditions must exercise care when using the steering wheel heater. It may cause burns even at low temperatures, especially if used for long periods.**
- **Do not place anything on the steering wheel that insulates against heat, such as a blanket or steering wheel covers of any type and material. This may cause the steering wheel heater to overheat.**

MIRRORS

Inside Day/Night Mirror

The mirror can be adjusted up, down, left, and right. The mirror should be adjusted to center on the view through the rear window. Headlight glare from vehicles behind you can be reduced by moving the lever under the mirror to the night position (toward the rear of the vehicle). The mirror should be adjusted while the lever under the mirror is set in the day position (toward the windshield).

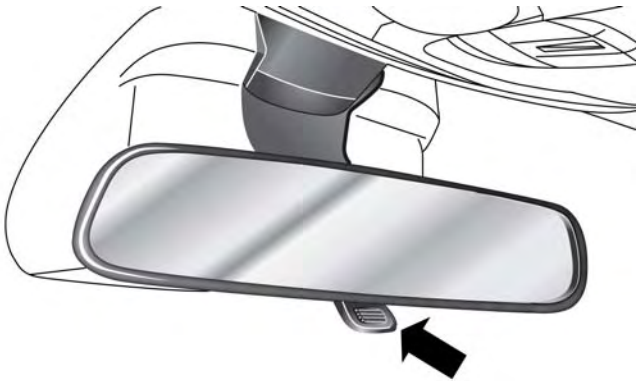

Mirror Adjustment

NOTE: The mirror will automatically release in the event of heavy contact with a passenger.

Auto Dimming Mirror — If Equipped

This mirror automatically adjusts for headlight glare from vehicles behind you. You can turn the feature on or off by pushing the button at the base of the mirror. A light to the left of the button will illuminate to indicate when the dimming feature is activated. The sensor to the right of the button does not illuminate.

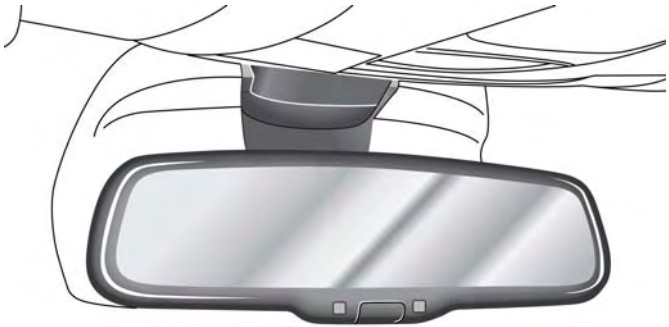

Dimming Mirror

NOTE: This feature is disabled when the vehicle is moving in REVERSE.

Outside Mirrors

Power Adjustment Mirrors — If Equipped

The power mirror switch is located on the driver's door panel.

To adjust the mirror, rotate the mirror selection switch to the left or to the right and then push the mirror adjustment switch in the four directions indicated by arrows.

NOTE:

- To adjust the power mirrors, the ignition must be in the RUN position.
- The power mirror switches will remain active for up to three minutes after the ignition is cycled to the OFF position. Opening either front door will cancel this feature.
- Once the mirror is adjusted, rotate the control to the neutral position to avoid accidental movements.

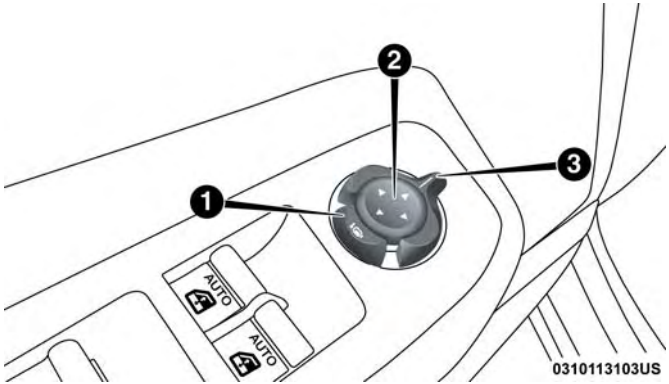

Power Mirror Switch

1 — Power Folding Mirror Switch
2 — Mirror Adjustment Switch
3 — Mirror Selector Switch

Manual Adjustment Mirrors — If Equipped

To adjust the exterior mirrors, push the corners of the mirrors till desired alignment is obtained.

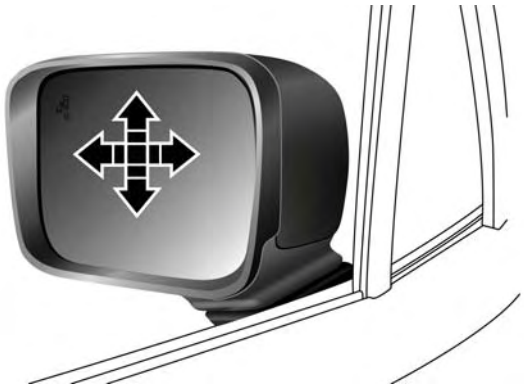

Manual Adjustment Mirror

Folding Mirror

The exterior mirrors are hinged to allow the mirror to pivot forward or rearward to help avoid damage. The mirror has three detent positions: full forward, normal and full rearward.

Folding Exterior Mirror

Power Folding/Unfolding Mirrors — If Equipped

Push the mirror fold/unfold switch briefly to fold or unfold the exterior mirrors.

To fold or unfold the exterior mirrors, the ignition must be in the RUN position.

NOTE: The fold/unfold mirrors switch will remain active for up to three minutes after the ignition is cycled to the OFF position. Opening either front door will cancel this feature.

Heated Mirrors — If Equipped

These mirrors are heated to melt frost or ice. This feature can be activated whenever you turn on the Rear Window Defroster.

Illuminated Vanity Mirrors — If Equipped

An illuminated vanity mirror is located on each sun visor. To use the mirror, rotate the sun visor down and swing the mirror cover upward. The lights will turn on automatically. Closing the mirror cover will turn the light off.

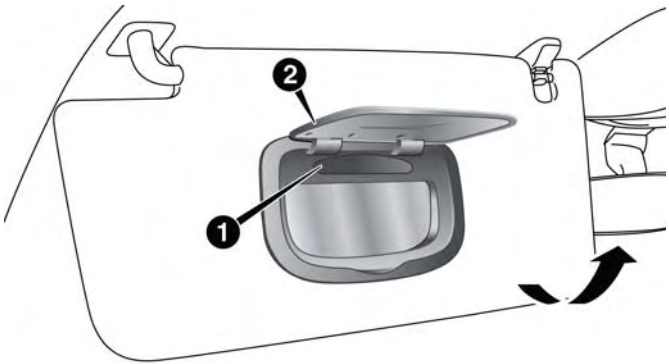

Vanity Mirror

1 — Mirror Light
2 — Mirror Cover

EXTERIOR LIGHTS

Headlights

The headlight switch is located on the left side of the instrument panel. The headlight switch controls the operation of the headlights, side marker lights, daytime running lights, fog lights and the dimming of the instrument cluster and interior lighting.

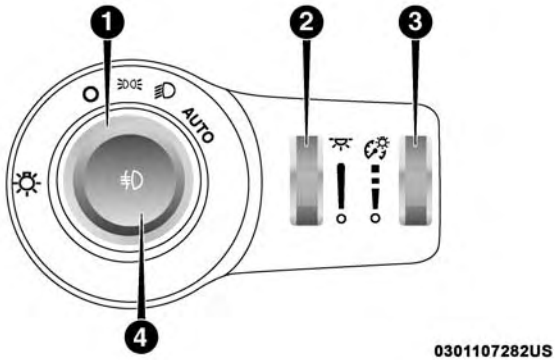

Headlight Switch

1 — Rotate Headlight Switch
2 — Ambient Light Dimmer
3 — Instrument Panel Dimmer
4 — Push Fog Light Switch

Turning on the headlights will illuminate the instrument cluster and the controls located on the instrument panel.

Daytime Running Lights (DRL) — If Equipped

The Daytime Running Lights (DRLs) will turn on when the engine is started and remain on unless the headlights are turned on or the engine is shut off.

The DRLs will be disabled during turn signal operation and resume operation when the turn signal operation has ended.

High Beams

To turn on the high beam headlights, push the turn signal lever forward (toward the front of the vehicle) and an indicator will illuminate in the cluster. To turn off the high beams, pull the turn signal lever rearward (toward the rear of the vehicle).

High Beam And Turn Signal Controls

NOTE: The headlights must be on for the high beams to activate.

Flash-To-Pass

You can signal another vehicle with your headlights by lightly pulling the multifunction lever toward you. This will cause the headlights to turn on at high beam and remain on until the lever is released.

Automatic Headlights — If Equipped

This system automatically turns the headlights on or off according to ambient light levels. To turn the system on, rotate the headlight switch clockwise to the last detent (AUTO position) for automatic headlight operation. When the system is on, the headlight time delay feature is also on. This means the headlights will stay on for up to 90 seconds after you place the ignition into the OFF position. To turn the automatic system off, move the headlight switch out of the AUTO position.

Refer to "Headlight Delay" in this section for more information.

NOTE: The ignition must be in the RUN or START position before the headlights will come on in the automatic mode.

Light Sensor

The light sensor is equipped with an infrared LED, located on the windshield. It detects changes in light intensity outside the vehicle, based on the sensitivity of light set by using the menu on the display or on the Uconnect system.

The higher the sensitivity, the lesser the amount of external light required for controlling the lighting.

Automatic High Beam Headlamp Control — If Equipped

The Automatic High Beam Headlamp Control system provides increased forward lighting at night by automating high beam control through the use of a digital camera mounted on the inside rearview mirror. This camera detects vehicle specific light and automatically switches from high beams to low beams until the approaching vehicle is out of view.

NOTE:

- The multifunction lever must be in the high beam position in order to activate the Automatic High Beams.
- The Automatic High Beam Headlamp Control can be turned on or off using the Uconnect System. Refer to "Uconnect Settings" in "Multimedia" for further information.
- Broken, muddy, or obstructed headlights and taillights of vehicles in the field of view will cause headlights to remain on longer (closer to the vehicle). Also, dirt, film, and other obstructions on the windshield or camera lens will cause the system to function improperly.

When set to AUTO, the system automatically turns the headlights on or off based on ambient light levels.

Parking Lights

From the O (off) position, rotate the headlight switch to the first detent (parking position) to turn on the parking lights. The parking light indicator in the instrument cluster will illuminate.

Headlight Delay

This feature provides the safety of headlight illumination for up to 90 seconds when leaving your vehicle in an unlit area.

The time delay of the headlights is programmable between 0, 30, 60 and 90 seconds. Refer to "Uconnect Settings" in "Multimedia" for further information.

Headlight Delay Activation

To activate the delay feature, place the ignition in the OFF position while the headlights are still on. Then, turn off the headlights within two minutes. The delay interval begins when the headlight switch is turned off from the "Low beam" position.

If the headlight switch is in AUTO position and headlights were on before the ignition is OFF, the delay interval begins automatically.

Headlight Delay Deactivation

The feature is disabled by turning on the headlights, the parking lights or by placing the ignition in the RUN position.

If you shut off the lights before the ignition is turned on, they will turn off in the normal manner.

NOTE: The lights must be turned off within two minutes of placing the ignition in the OFF position to activate this feature.

Front Fog Lights — If Equipped

The front fog light switch is built into the headlight switch.

To activate the front fog lights, turn on the parking lights or the low beam headlights and push the fog light button on the headlight switch. To turn off the front fog lights, push the fog light button on the headlight switch a second time or turn off the headlight switch.

An indicator light in the instrument cluster illuminates when the fog lights are turned on.

NOTE: The fog lights will operate with the low beam headlights or parking lights on. Selecting the high beam headlights will turn off the fog lights.

Cornering Lights

The cornering lights are a feature to improve visibility at night while turning the vehicle. When activated, a light incorporated in the front fog light will illuminate on the side of the vehicle the steering wheel is rotated or the turn signal indicator is on. It can be activated through the Uconnect System.

Refer to “Uconnect Settings” in “Multimedia” for further information.

Turn Signals

Move the multifunction lever up or down and the arrows on each side of the instrument cluster flash to show proper operation of the front and rear turn signal lights.

NOTE: When the Daytime Running Lights are on and a turn signal is activated, the Daytime Running Lamp will turn off on the side of the vehicle in which the turn signal is flashing. The Daytime Running Lamp will turn back on when the turn signal is turned off.

INTERIOR LIGHTS

Courtesy Lights

Interior Lights Dimmer Switch

Rotate the ambient dimmer control upward or downward to increase or decrease the brightness of the ambient light located in the overhead console, door handle lights, lower instrument panel lights, door map pocket lights, and cubby bin lights.

With the parking lights or headlights on, rotate the instrument panel dimmer control upward or downward to increase or decrease the brightness of the instrument panel. The instrument panel dimmer has two position at the top of the thumb wheel. The first detent position puts the interior lighting into daytime mode and at the very top detent position will illuminate all the interior lights. At the bottom detent position of the of the instrument panel dimmer, the internal backlights to their lowest dimmable setting and disable the interior lights.

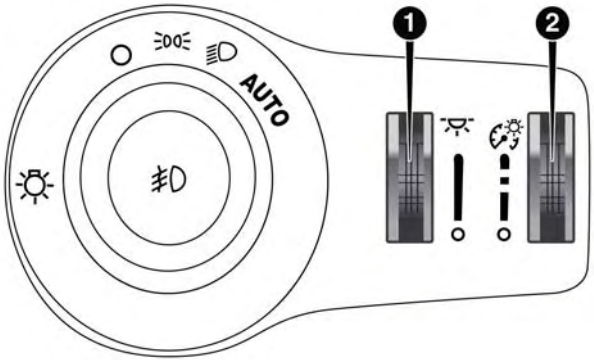

Headlight Switch

1 — Ambient Light Control
2 — Instrument Panel Dimmer

Front Lights

The courtesy lights are mounted between the sun visors above the rear view mirror. The light switches are used to turn the lights on or off.

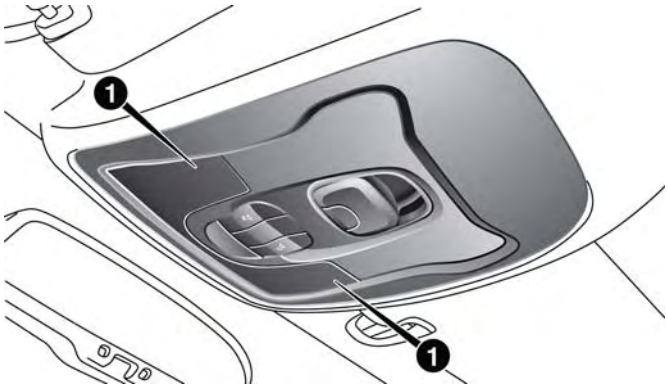

Courtesy Lights

1 — Driver's Courtesy Lights

Courtesy Light Switches

1— Left Switch
2— Right Switch

To operate the courtesy lights, push either the driver or passenger light switch.

NOTE:

- Before exiting the vehicle, make sure that the interior lights are turned off. This will prevent the battery from discharging once the doors are closed.
- If a light is left on, it will automatically be turned off after approximately 15 minutes after the ignition is in the OFF position.

Rear Lights

Push the button on the rear dome light once to turn the light on, the light will remain on at all times. Push the button a second time to turn the light off, the lights will remain off at all times.

Rear Dome Light

Vehicles With Retractable Roof

For vehicles equipped with a retractable roof, there are two interior lights located above the grab handles of the rear doors.

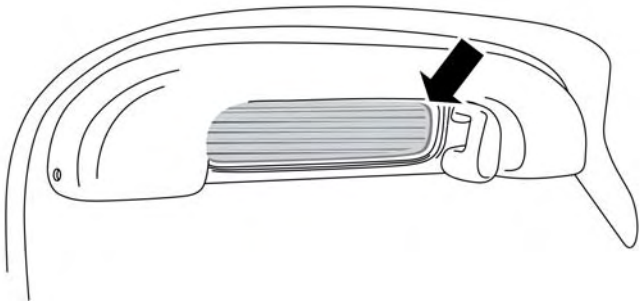

Rear Interior Light

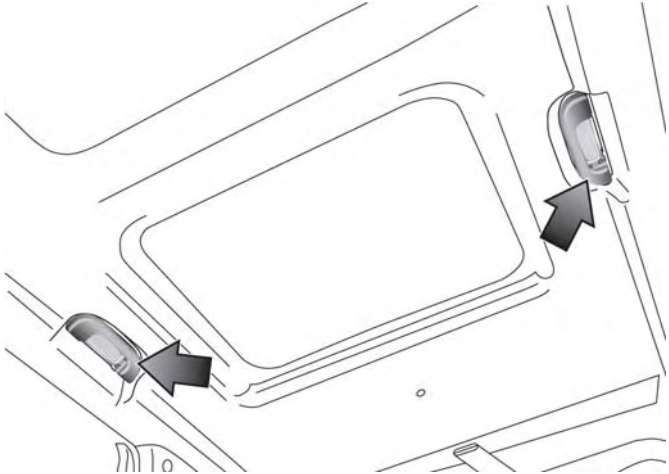

Interior Light Locations

The lights come on by opening any of the doors.

Dome Light Timing

The Dome Light will automatically illuminate when the doors are unlocked, the doors are opened or after the doors are closed.

Timing Entering The Vehicle

The dome lights illuminate in the following ways:

- When the doors are unlocked, the dome light will illuminate for approximately 27 seconds.
- When one of the doors is opened, the dome light will illuminate for approximately three minutes.
- When the doors are closed, the dome light will automatically shut off after approximately 27 seconds.

The timing stops once the ignition is placed in the RUN or ON position.

The dome light will turn off under any of the following conditions:

- The dome light is disabled when the ignition is placed in the RUN or ON position.
- The dome lights will turn off automatically when the doors are locked.
- The dome lights will automatically turn off after approximately fifteen minutes of inactivity to preserve the battery.

Timing Exiting The Vehicle

The dome light will illuminate under the following conditions when the ignition is placed to the OFF position and the key is removed:

- The dome light will illuminate for 27 seconds after the ignition is placed in the OFF position.
- The opening of one of the doors (approximately three minutes).
- After closing a door (approximately 27 seconds).

The dome light timing is disabled when the doors are locked.

Cargo Area Lights

One interior light is located in the cargo area on the driver's side trim panel.

This light automatically turns on/off when the liftgate is opened and closed, regardless of the position of the ignition.

WIPERS AND WASHERS

The windshield wiper/washer controls are located on the lever on the right side of the steering column. The front wipers are operated by rotating a switch, located on the end of the lever.

Windshield Wiper Stalk

CAUTION!

Always remove any buildup of snow that prevents the windshield wiper blades from returning to the "park" position. If the windshield wiper switch is turned off, and the blades cannot return to the "park" position, damage to the wiper motor may occur.

Front Wiper Operation

Rotate the windshield wiper knob to one of the two detent positions for intermittent settings, the third detent for low wiper operation and the fourth for high wiper operation.

Windshield Washer Operation

To use the washer, pull the lever toward you and hold while spray is desired. If the lever is pulled while in the intermittent setting, the wipers will turn on and operate for several wipe cycles after the lever is released, and then resume the intermittent interval previously selected.

If the lever is pulled while the wipers are in the off position, the wipers will operate for several wipe cycles, then turn off.

WARNING!

Sudden loss of visibility through the windshield could lead to a collision. You might not see other vehicles or other obstacles. To avoid sudden icing of the windshield during freezing weather, warm the windshield with the defroster before and during windshield washer use.

Mist

Use this feature when weather conditions make occasional usage of the wipers necessary. Push the lever upward to the MIST position and release for a single wiping cycle.

NOTE: The Mist feature does not activate the washer pump; therefore, no washer fluid will be sprayed on the windshield. The wash function must be used in order to spray the windshield with washer fluid.

Rain Sensing Wipers — If Equipped

This feature senses moisture on the windshield and automatically activates the wipers for the driver. The feature is especially useful for road splash or overspray from the windshield washers of the vehicle ahead. Rotate the end of the multifunction lever to one of the two detent positions for intermittent settings, to activate this feature.

NOTE: If the end of the multifunction lever rotates from off to the first intermittent setting or from the first intermittent setting to the second intermittent setting, the wipers will perform a round up to clean the windshield.

This function can be activated or deactivated by the Uconnect Settings through the radio. Refer to "Uconnect Settings" in the "Multimedia" for further information.

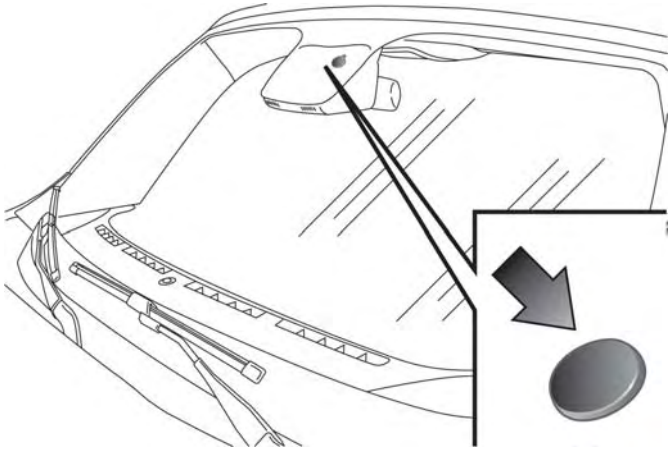

Rain Sensor

The sensitivity of the system can be adjusted with the multifunction lever. Wiper delay position one is the least sensitive, and wiper delay position two is the most sensitive. Place the wiper switch in the off position when not using the system.

Rain Sensing Wipers – Inhibition

When the user switches the ignition from OFF to RUN or START with the lever already in the intermittent position, no wipe cycle is performed for safety reasons. This temporary inhibition avoids accidental activations of the wiping (e.g during the hand washing of the windscreen, blocking the blades in ice/snow conditions). The user can activate the Rain Sensing Wipers in three ways:

- Moving the level in off position and then in Intermittent positions.
- One MIST command actuation.
- The vehicle speed exceeds 3 mph (5 km/h) and the rain sensor detects the presence of rain.

NOTE: On vehicles equipped with automatic transmission, the Rain Sensing Wipers will become inactive even if the lever is in one of the intermittent positions if the vehicle is placed in NEUTRAL and the vehicle speed is less than 3 mph (5 km/h). This prevents damage to the windshield wipers during an automatic car wash.

NOTE:

- The Rain Sensing feature will not operate when the wiper switch is in the low or high-speed position.
- The Rain Sensing feature may not function properly when ice, or dried salt water is present on the windshield.
- Use of Rain-X or products containing wax or silicone may reduce Rain Sensing performance.
- The Rain Sensing feature can be turned on and off using the Uconnect System, refer to "Uconnect Settings" in "Multimedia" for further information.

Rear Wiper Operation

The rear wiper/washer controls are located on the lever on the right side of the steering column. The rear wiper/washer is operated by rotating a switch, located at the middle of the lever.

NOTE: If the front wiper is moving and the vehicle is shifted in REVERSE, the rear wiper will perform one round up to clean the rear window.

Rotate the center portion of the lever upward to the first detent for intermittent operation and to the second detent for continuous rear wiper operation. If the front wiper is set to Automatic Mode (on the wiper stalk as well as "Enabled" through Uconnect settings), placing the rear wiper in an intermittent position will cause the front and rear wipers to sync up. Turning the front wipers off will cause the rear wipers to also stop.

To use the washer, push the lever forward and hold while spray is desired. If the lever is pushed while in the intermittent setting, the wiper will turn on and operate for several wipe cycles after the end of the lever is released, and then resume the intermittent interval previously selected.

If the lever is pushed while the wiper is in the off position, the wiper will operate for several wipe cycles, then turn off.

NOTE: As a protective measure, the pump will stop if the switch is held for more than 30 seconds. Once the lever is released, the pump will resume normal operation.

Rear Window Defroster

The rear window defroster button is located with the Climate Controls on the instrument panel. Push this button to turn on the rear window defroster. An indicator in the button will illuminate when the rear window defroster is on. The rear window defroster automatically turns off after approximately 20 minutes. To manually shut the defroster off, push the button a second time.

Auto Comfort Systems — If Equipped

In vehicles equipped with Auto On Comfort, when turning on the vehicle the driver's heated seat will automatically turn on when temperatures are below 40° F (4.4° C).

Auto Comfort Systems can be enabled or disabled. Refer to "Uconnect Settings" in "Multimedia" for further information.

CAUTION!

Failure to follow these cautions can cause damage to the heating elements:

- **Use care when washing the inside of the rear window. Do not use abrasive window cleaners on the interior surface of the window. Use a soft cloth and a mild washing solution, wiping parallel to the heating elements. Labels can be peeled off after soaking with warm water.**
- **Do not use scrapers, sharp instruments, or abrasive window cleaners on the interior surface of the window.**
- **Keep all objects a safe distance from the window.**

Windshield Wiper De-Icer — If Equipped

Your vehicle may be equipped with a Windshield Wiper De-Icer feature that may be activated under the following conditions:

- **Activation By Front Defrost** — The Windshield Wiper De-Icer will be activated automatically in the case of a cold weather manual start with full front defrost, and the ambient temperature is below 40° F (4.4° C).

- **Activation By Rear Defrost** — The Windshield Wiper De-Icer will be activated automatically when the rear defrost is turned on and the ambient temperature is below 40° F (4.4° C).
- **Activation By Remote Start Operation** — When Remote Start is active and the outside ambient temperature is less than 40° F (4.4° C), the Windshield Wiper De-Icer will be enabled. Upon exiting remote start mode the Windshield Wiper De-Icer will remain on. Remote Start Operation can be enabled or disabled. Refer to "Uconnect Settings" in "Multimedia" for further information.

Auto-On Rear Window Defroster/Windshield Wiper De-Icer — If Equipped

When turning the vehicle ON, the Rear Window Defroster and Windshield Wiper De-Icer will automatically turn on when the outside ambient temperature is less than 40° F (4.4° C).

The Rear Window Defroster and Windshield Wiper De-Icer automatically turn off after approximately 20 minutes. To manually shut the defroster/windshield off, push the button a second time.

Auto On can be enabled or disabled. Refer to "Uconnect Settings" in "Multimedia" for further information.

CLIMATE CONTROLS

The Climate Control System allows you to regulate the temperature, air flow, and direction of air circulating throughout the vehicle. The controls are located on the touchscreen (if equipped) and on the instrument panel below the radio.

Air Outlet And Diffuser Locations — Passenger Compartment

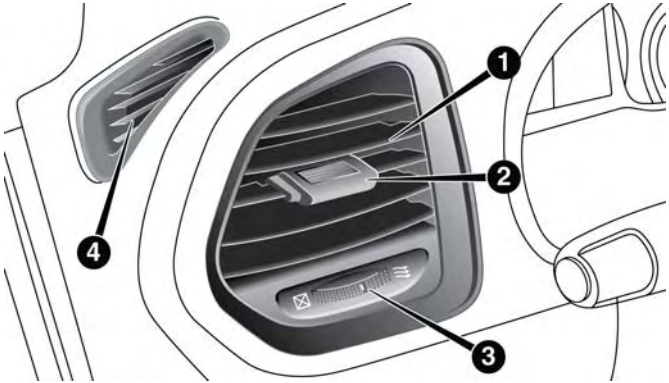

Left Side Air Outlets

1 — Adjustable Air Outlet
2 — Air Vane Adjustment
3 — Air Flow Outlet Adjustment
4 — Fixed Air Outlet

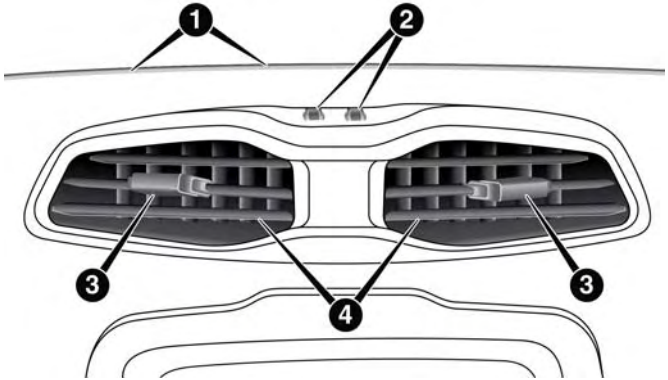

Center Air Outlets

1 — Fixed Air Outlet
2 — Air Flow Outlet Adjustment
3 — Air Vane Adjustment
4 — Adjustable Air Outlet

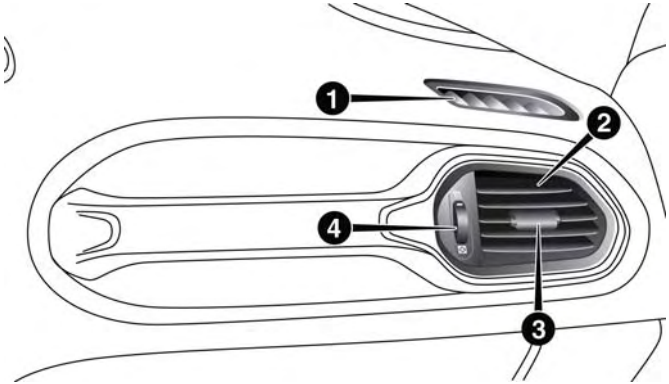

Right Side Air Outlets

1 — Fixed Air Outlet
2 — Adjustable Air Outlet
3 — Air Vane Adjustment
4 — Air Flow Outlet Adjustment

Manual Climate Controls Overview

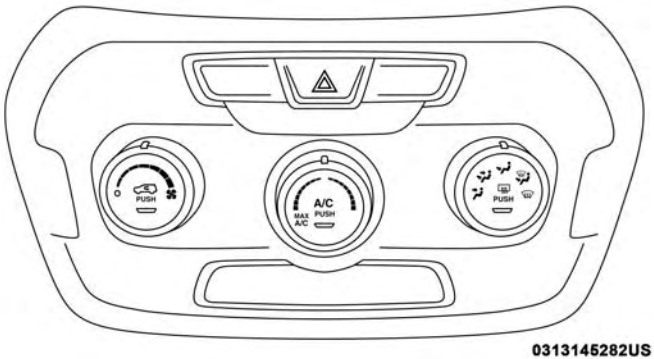

Manual Climate Controls

Manual Climate Control Descriptions

Icon	Description
MAX A/C	**MAX A/C Button** MAX A/C sets the system for maximum cooling performance. Push the button to turn on the MAX A/C setting. In MAX A/C, the blower speed and mode position can be adjusted to desired user settings.
A/C	**A/C Button** Push the button to engage the Air Conditioning. A light will illuminate when the Air Conditioning system is engaged.
	Recirculation Button Press and release this button on the touchscreen, or push the button on the faceplate, to change the system between recirculation mode and outside air mode. Recirculation can be used when outside conditions, such as smoke, odors, dust, or humidity are present. Recirculation can be used in all modes except for Defrost. Recirculation may be unavailable if conditions exist that could create fogging on the inside of the windshield. The A/C can be deselected manually without disturbing the mode control selection. Continuous use of the Recirculation mode may make the inside air stuffy and window fogging may occur. Extended use of this mode is not recommended.
FRONT	**Front Defrost Button** The Front Defrost button changes the current airflow setting to Defrost mode. The indicator illuminates when this feature is on. Air comes from the windshield and side window demist outlets. When the defrost button is selected, the blower level may increase. Use Defrost mode with maximum temperature settings for best windshield and side window defrosting and defogging. When toggling the front defrost mode button, the climate system will return to previous setting.

Icon	Description
REAR	**Rear Defrost Button** Push and release the Rear Defrost Control button to turn on the rear window defroster and the heated outside mirrors (if equipped). An indicator will illuminate when the rear window defroster is on.
	Temperature Control Push these buttons to regulate the temperature of the air inside the passenger compartment. Pushing the blue arrow indicates cooler temperatures, while pushing the red button indicates warmer temperatures.
	Blower Control Rotate the control to regulate the amount of air forced through the ventilation system in any mode. The blower speed increases as you move the control clockwise from the “0” (OFF) position.
Mode MODE	**Mode Button** Air is directed through the floor, defrost, and side window demister outlets. This setting works best in cold or snowy conditions that require extra heat to the windshield. This setting is good for maintaining comfort while reducing moisture on the windshield.
OFF	**Climate Control OFF Button** This button turns the Climate Control System off.

Rear Window Defrosting

Push and release the rear window defrost button to turn the function on/off.

Activation of this function is indicated by the rear defrost indicator light on the instrument panel turning on.

If equipped, push the rear defrost button to activate the defrosting of door mirrors and heated rear window.

CAUTION!

To avoid causing damage to the rear window defroster heating filaments do not affix stickers or other objects to the inside of the rear glass.

Air Recirculation

Push and release the Air Recirculation button so that the LED is on, to enter recirculation mode. It is recommended to turn the internal air recirculation on while standing in traffic or in tunnels to prevent the introduction of polluted air.

Do not use the function for a long period of time, particularly if there are many passengers in the vehicle, to prevent the windows from misting up.

NOTE: Internal air recirculation makes it possible to reach the required heating or cooling conditions quickly depending on the mode selected. Do not use the internal air recirculation function on rainy/cold days as it would considerably increase the possibility of the windows misting.

System Maintenance

In Winter, the Climate Control system must be turned on at least once a month for approximately ten minutes.

Have the system inspected at an authorized dealer before the summer.

NOTE: This AC system uses R1234yf Refrigerant.

Automatic Climate Control Overview

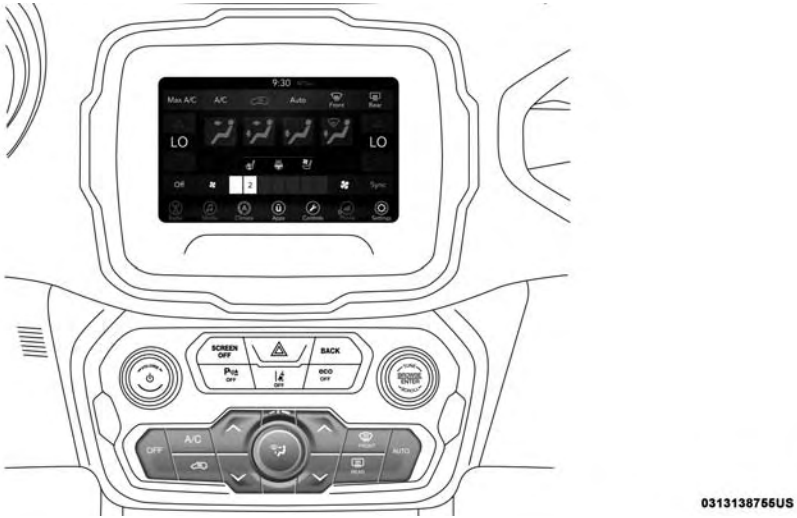

Uconnect 4 with 7-inch Display Automatic Climate Controls

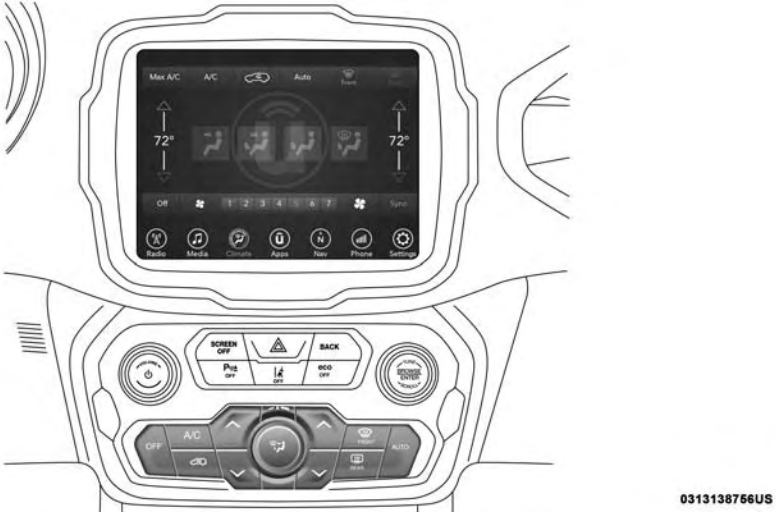

Uconnect 4C/4C NAV with 8.4-inch Display Automatic Climate Controls

Automatic Climate Control Descriptions

Icon	Description
MAX A/C	**MAX A/C Button** MAX A/C sets the system for maximum cooling performance. Push the button to turn on the MAX A/C setting. In MAX A/C, the blower speed and mode position can be adjusted to desired user settings. **NOTE:** The MAX A/C button is only on the touchscreen.
A/C	**A/C Button** Push the A/C Control Button to change the current setting. The indicator illuminates when the A/C is ON. Pushing the AUTO control button will cause the A/C operation to change to AUTO mode and the A/C indicator will turn off.
	Recirculation Button Press and release this button on the touchscreen, or push the button on the faceplate, to change the system between recirculation mode and outside air mode. Recirculation can be used when outside conditions, such as smoke, odors, dust, or high humidity are present. Recirculation can be used in all modes. Recirculation may be unavailable (button on the touchscreen greyed out) if conditions exist that could create fogging on the inside of the windshield. The A/C can be deselected manually without disturbing the mode control selection. Continuous use of the Recirculation mode may make the inside air stuffy and window fogging may occur. Extended use of this mode is not recommended.

Icon	Description
AUTO	**AUTO Button** Pushing this button will automatically control the interior cabin temperature by adjusting airflow distribution and amount. Performing this function will cause the automatic climate controls to change between manual mode and automatic modes. Refer to "Automatic Operation" within this section for more information.
FRONT	**Front Defrost Button** The Front Defrost button changes the current airflow setting to Defrost mode. The indicator illuminates when this feature is on. Air comes from the windshield and side window demist outlets. When the defrost button is selected, the blower level may increase. Use Defrost mode with maximum temperature settings for best windshield and side window defrosting and defogging. When toggling the front defrost mode button, the climate system will return to previous setting.
REAR	**Rear Defrost Button** Push the Rear Defrost button to turn on the rear window defroster and the heated outside mirrors (if equipped). An indicator will illuminate when the rear window defroster is on.
Faceplate Knob MODE **Touchscreen Buttons**	**Blower Control** Blower Control is used to regulate the amount of air forced through the climate system. There are seven blower speeds available. The speeds can be selected using either the blower control knob on the faceplate or the buttons on the touchscreen. • **Faceplate:** The blower speed increases as you turn the blower control knob clockwise from the lowest blower setting. The blower speed decreases as you turn the blower control knob counterclockwise.

Icon	Description
▲ ▼	• **Touchscreen:** Use the small blower icon to reduce the blower setting and the large blower icon to increase the blower setting. Blower speed can also be selected by pressing the blower bar area between the icons.
△ ▽	**Driver and Passenger Temperature Control** Push these buttons to regulate the temperature of the driver and passenger settings independently. Pushing the blue arrow indicates cooler temperatures, while pushing the red button indicates warmer temperatures.
SYNC	**SYNC Button** Press the SYNC button on the touchscreen to toggle the SYNC feature on/off. The SYNC indicator is illuminated when this feature is enabled. SYNC is used to synchronize the passenger temperature setting with the driver temperature setting. Changing the passenger's temperature setting while in SYNC will automatically exit this feature. **NOTE:** The SYNC button is only on the touchscreen.
Mode Button MODE	**Mode Button** Air is directed through the floor, defrost, and side window demister outlets. This setting works best in cold or snowy conditions that require extra heat to the windshield. This setting is good for maintaining comfort while reducing moisture on the windshield.

Icon	Description
Panel Mode	**Panel Mode** Air comes from the outlets in the instrument panel. Each of these outlets can be individually adjusted to direct the flow of air. The air vanes of the center outlets and outboard outlets can be moved up and down or side to side to regulate airflow direction. There is a shut off wheel located below the air vanes to shut off or adjust the amount of airflow from these outlets.
Bi-Level Mode	**Bi-Level Mode** Air comes from the instrument panel outlets and floor outlets. A slight amount of air is directed through the defrost and side window demister outlets. **NOTE:** Bi-Level mode is designed under comfort conditions to provide cooler air out of the panel outlets and warmer air from the floor outlets.
Floor Mode	**Floor Mode** Air comes from the floor outlets. A slight amount of air is directed through the defrost and side window demister outlets.
Mix Mode	**Mix Mode** Air is directed through the floor, defrost, and side window demister outlets. This setting works best in cold or snowy conditions that require extra heat to the windshield. This setting is good for maintaining comfort while reducing moisture on the windshield.

Icon	Description
OFF	**Climate Control OFF Button** This button turns the Climate Control System off.

Climate Control System Compressor

Push the A/C Control button to activate/deactivate the compressor (activation is indicated by the LED on the button turning on).

The system remembers that the compressor has been turned off, even after the engine has stopped.

Pushing the A/C button will stop AUTO MODE (AUTO LED will turn off). To restore automatic control of compressor, push the AUTO button again.

NOTE: With the compressor off, air cannot be introduced to the passenger compartment with a temperature lower than the outside temperature. Under certain environmental conditions, windows could fog rapidly since the air is not dehumidified.

Rapid Window Demisting (MAX-Defrost Function)

Push the MAX-defrost button to activate (LED on) the windshield and side window demisting function.

The Climate Control system carries out the following operations:

- Turns on the air conditioning compressor when environmental conditions are suitable.
- Turns air recirculation off.
- Sets blower fan to the maximum speed.
- Directs air flow to windshield and front side window diffusers.

When the Recirculation Control or AUTO buttons are pushed, the Climate Control system will deactivate the Front Defrost (MAX-DEF) function.

Selecting the footwell/windshield or only windshield distribution activates the Climate Control system compressor and the air recirculation is set to outside air intake.

This logic guarantees optimum visibility at the windows. Max-defrost is also available in manual mode.

Rear Window Defrosting

Push and release the rear window defrost button to turn the function on/off.

Activation of this function is indicated by the rear defrost indicator light on the instrument panel turning on. If equipped, push the rear defrost button to activate the defrosting of door mirrors and heated rear window.

CAUTION!

To avoid causing damage to the rear window defroster heating filaments do not affix stickers or other objects to the inside of the rear glass.

Turning Off The Climate Control System

Push the ON/OFF button.

With the Climate Control system off:

- Air recirculation is on, isolating the passenger compartment from the outside.
- The A/C compressor is off.
- The blower is off.
- The heated rear window can be activated/deactivated.

NOTE: The Climate Control unit stores the temperatures set before the system was turned off and restores them when one of the following knobs/buttons is pushed:

- A/C
- Recirculation
- Max Defrost
- Blower Increase
- AUTO

To restart the Climate Control system in fully automatic mode, push the AUTO button.

System Maintenance

In Winter, the Climate Control system must be turned on at least once a month for approximately ten minutes.

Have the system inspected at an authorized dealership before the summer.

NOTE: This AC system uses R1234yf Refrigerant.

Automatic Temperature Control (ATC)

Automatic Operation

1. Push the AUTO button on the front ATC panel. The system regulates the amount of airflow.

2. Adjust the temperature you would like the system to maintain, by adjusting the driver, and passenger temperatures. Once the desired temperature is displayed, the system will achieve and automatically maintain that comfort level.
3. When the system is set up for your comfort level, it is not necessary to change the settings. You will experience the greatest efficiency by simply allowing the system to function automatically.

NOTE:

- It is not necessary to move the temperature settings. The system automatically adjusts the temperature, mode, and fan speed to provide comfort as quickly as possible.

To provide you with maximum comfort in the automatic mode, during cold start-ups, the blower fan will remain on low until the engine warms up. The fan will engage immediately if the Defrost mode is selected, or by changing the front blower knob setting.

Operating Tips

NOTE: Refer to the chart at the end of this section for suggested control settings for various weather conditions.

Summer Operation

The engine cooling system must be protected with a high-quality antifreeze coolant to provide proper corrosion protection and to protect against engine overheating. OAT coolant (conforming to MS.90032) is recommended.

Winter Operation

To ensure the best possible heater and defroster performance, make sure the engine cooling system is functioning properly and the proper amount, type, and concentration of coolant is used. Use of the Air Recirculation mode during Winter months is not recommended, because it may cause window fogging.

Vacation/Storage

Before you store your vehicle, or keep it out of service (i.e., vacation) for two weeks or more, run the air conditioning system at idle for about five minutes, in fresh air with the blower setting on high. This will ensure adequate system lubrication to minimize the possibility of compressor damage when the system is started again.

Window Fogging

Vehicle windows tend to fog on the inside in mild, rainy, and/or humid weather. To clear the windows, select Defrost or Mix mode and increase the front blower speed. Do not use the Recirculation mode without A/C for long periods, as fogging may occur.

CAUTION!

Failure to follow these cautions can cause damage to the heating elements:

- **Use care when washing the inside of the rear window. Do not use abrasive window cleaners on the interior surface of the window. Use a soft cloth and a mild washing solution, wiping parallel to the heating elements. Labels can be peeled off after soaking with warm water.**
- **Do not use scrapers, sharp instruments, or abrasive window cleaners on the interior surface of the window.**
- **Keep all objects a safe distance from the window.**

Outside Air Intake

Make sure the air intake, located directly in front of the windshield, is free of obstructions, such as leaves. Leaves collected in the air intake may reduce airflow, and if they enter the plenum, they could plug the water drains. In Winter months, make sure the air intake is clear of ice, slush, and snow.

Cabin Air Filter

The climate control system filters out dust and pollen from the air. Contact an authorized dealer to service your cabin air filter, and to have it replaced when needed.

Operating Tips Chart

WEATHER	CONTROL SETTINGS
Hot weather and vehicle interior is very hot	Set the mode control to , on, and blower on high. Roll down the windows for a minute to flush out the hot air. Once comfort is achieved adjust controls for comfort.
Warm weather	Turn on and set the mode control to the position.
Cool Sunny	Operate in position.
Cool & Humid conditions	Set the mode control to and turn on to keep windows clear.
Cold Weather	Set the mode control to the position. If windshield fogging starts to occur, move the control towards the position.

8000cb71

WINDOWS

Power Window Controls

The power window switch is located on the driver's door panel. The driver's power window switch controls the operation of all the windows.

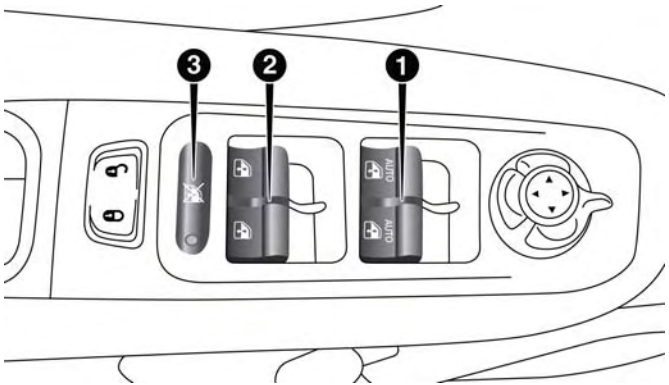

Power Window Switches

1 — Opening/Closing Left/Right Front Window
2 — Opening/Closing Left/Right Rear Window
3 — Window Lockout Switch (Rear Doors)

There are single window controls on each passenger door trim panel, which operate the passenger door windows. The window controls will operate only when the ignition is in the ON or RUN position.

NOTE:

- If the Remote Start functionality is active, it is not possible to move any windows.
- The power window switches will remain active for up to three minutes after the ignition is cycled to the OFF position. Opening either front door will cancel this feature.

Push the Window Lockout switch to disable rear passenger window controls. When this feature is active, the LED light will illuminate and only the driver can operate the rear passenger windows. To undo this feature, push the switch again and the LED will turn off.

WARNING!

Never leave children unattended in a vehicle, and do not let children play with power windows. Do not leave the key fob in or near the vehicle, or in a location accessible to children, and do not leave the ignition of a vehicle equipped with Keyless Enter-N-Go in the ACC or ON/RUN mode. Occupants, particularly unattended children, can become entrapped by the windows while operating the power window switches. Such entrapment may result in serious injury or death.

Auto-Down Feature

The driver door power window switch and the front and rear passenger doors window switches have an Auto-Down feature.

Push the window switch down for half a second and release. The window will go down automatically.

To stop the window from going all the way down during the Auto-Down operation, pull up or push down on the switch briefly.

To open the window part way (manually), push the window switch down briefly and release.

Auto-Up Feature With Auto-Reverse Protection — If Equipped

The driver door power window switch and the front passenger door window switch have an Auto-Up feature.

Pull the window switch up, for about half a second, and release and the window will go up automatically.

To stop the window from going all the way up during the Auto-Up operation, pull up or push down on the switch briefly.

To close the window part way (manually), pull the window switch up briefly and release it.

NOTE:

- If the window runs into any obstacle during auto-closure, it will reverse direction and then go back down. Remove the obstacle and use the window switch again to close the window.
- Any impact due to rough road conditions may trigger the auto-reverse function unexpectedly during auto-closure. If this happens, pull the switch and hold to close the window manually.

WARNING!

There is no auto-reverse protection when the window is almost closed. To avoid personal injury be sure to clear your arms, hands, fingers and all objects from the window path before closing.

Reset Auto-Up

Should the Auto-Up feature stop working, the window probably needs to be reset. To reset Auto-Up:

1. Pull the window switch up to close the window completely and continue to hold the switch up for an additional two seconds after the window is closed.
2. Push the window switch down firmly to open the window completely and continue to hold the switch down for an additional two seconds after the window is fully open.

Wind Buffeting

Wind buffeting can be described as the perception of pressure on the ears or a helicopter-type sound in the ears. Your vehicle may exhibit wind buffeting with the windows down, or the sunroof (if equipped) in certain open or partially open positions. This is a normal occurrence and can be minimized. If the buffeting occurs with the rear windows open, open the front and rear windows together to minimize the buffeting. If the buffeting occurs with the sunroof open, adjust the sunroof opening to minimize the buffeting or open any window.

POWER MY SKY SUN ROOF — IF EQUIPPED

Power My Sky Operation

Open/Close The Front Panel

The power My Sky switches are located on the overhead console. The switches are used to open and close the front panel.

Front Panel Operation Switch

Operation Switch

1 — Front Panel Open/Close Switch
2 — Front Panel Vent Switch

To automatically retract the front panel to the open position, push the open/close button and release. From the fully open position, pull the open/close switch and release. The front panel will close completely.

To stop the movement of the front panel during automatic closing or opening, briefly push the open/close switch.

Venting The Front Panel

To vent the front panel push and release the vent switch.

During the vent operation any push on the open/close switch will stop the closing of the panel.

NOTE:

- If the My Sky is in open position, the vent switch must be held until the panel vents.
- The power roof controls will operate only when the ignition is in the ON or RUN position.
- If the Remote Start functionality is active, it will not be possible to move the roof.

Auto-Reverse Feature

The front panel of the retractable roof is equipped with a auto-reverse safety system that is able to detect the presence of an obstacle during the opening and closing motion of the panel.

When this event occurs, the front panel stops and reverses immediately.

NOTE: With both panels removed the retractable roof cannot be opened or closed.

Sunroof Reinitialization

The following procedure must be followed to reinitialize the sunroof and calibrate obstacle detection:

1. Place the ignition in the RUN position.
2. Push and hold the front panel close switch until the sunroof panel is fully closed, then release the switch.
3. Open the driver side front door.
4. Turn the ignition OFF.
5. After 10 seconds, place the ignition back in the RUN position.
6. Push and hold the front panel close switch again. The reinitialization process will begin within 10 seconds. Do not release the switch.
7. The sunroof will stop and an audible “click” will be heard.
8. Release the front panel close switch, then push and hold it again within 5 seconds. Do not release the switch.
9. As the front panel close switch is held, the sunroof panel will cycle to the fully open position and then back to the fully closed position again.
10. Once all sunroof motion has stopped, release the front panel close switch. Sunroof reinitialization and obstacle calibration is now complete.

NOTE: If the switch is released prior to the sunroof completing the above procedure, the entire process must be repeated.

Emergency Open/Close

If the Power My Sky switch fails, the retractable roof can be operated manually as follows:

1. Remove the protective cap located on the inner lining.
2. Remove the Allen Key or My Sky Key that is supplied in the tool bag in the cargo area.
3. Insert the Allen Key or My Sky Key into the key hole and turn it clockwise to open the roof or counterclockwise to close.

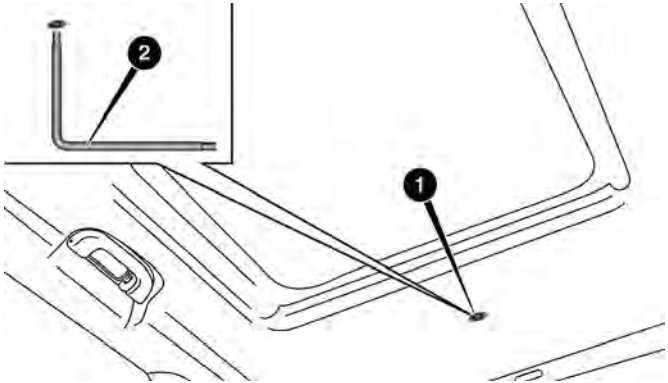

Emergency Key And Key Hole

1 — Key Hole
2 — Allen Key

CAUTION!

- **When refitting panels, be careful to avoid fingers, scarves, ties and items of clothing from getting caught under the panels themselves.**
- **Do not open the roof in the presence of snow or ice. There is risk of damage.**

Wind Buffeting

Wind buffeting can be described as the perception of pressure on the ears or a helicopter-type sound in the ears. Your vehicle may exhibit wind buffeting with the windows down, or the sunroof (if equipped) in certain open or partially open positions. This is a normal occurrence and can be minimized. If the buffeting occurs with the rear windows open, then open the front and rear windows together to minimize the buffeting. If the buffeting occurs with the sunroof open, adjust the sunroof opening to minimize the buffeting or open any window.

POWER GLASS SUNROOF WITH POWER SHADE — IF EQUIPPED

The power sunroof switches are located between the sun visors on the overhead console.

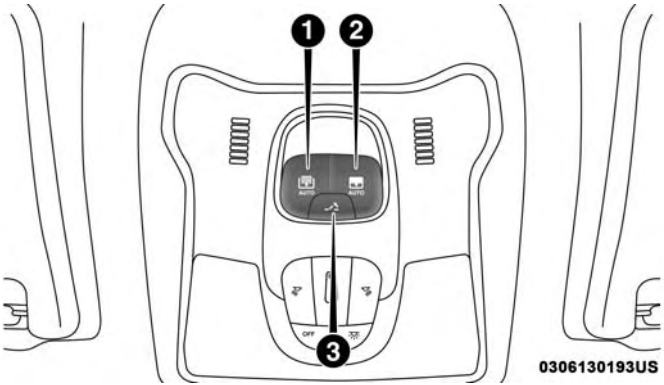

Power Sunroof Switches

1 — Power Sunshade Open/Close
2 — Power Sunroof Open/Close
3 — Venting Sunroof

WARNING!

- **Never leave children unattended in a vehicle, or with access to an unlocked vehicle. Never leave the key fob in or near the vehicle, or in a location accessible to children. Do not leave the ignition of a vehicle equipped with Keyless Enter-N-Go in the ON/RUN mode. Occupants, particularly unattended children, can become entrapped by the power sunroof while operating the power sunroof switch. Such entrapment may result in serious injury or death.**
- **In a collision, there is a greater risk of being thrown from a vehicle with an open sunroof. You could also be seriously injured or killed. Always fasten your seat belt properly and make sure all passengers are also properly secured.**
- **Do not allow small children to operate the sunroof. Never allow your fingers, other body parts, or any object, to project through the sunroof opening. Injury may result.**

Opening

Opening Sunroof

To retract the sunroof to the open position, push the Open/Close switch and the sunroof will fully open. The sunroof can be stopped in any position by pushing/pulling the switch a second time while is opening.

Venting Sunroof

To vent the sunroof push the Vent switch.

NOTE: The vent switch has the automatic function only at the opening of the sunroof. During the closing of the sunroof, the switch must be held until closed.

Closing

Closing Sunroof

To close the sunroof completely, pull the Open/Close switch and the sunroof will fully close. The sunroof can be stopped in any position by pushing/pulling the switch a second time while it is closing.

Wind Buffeting

Wind buffeting can be described as the perception of pressure on the ears or a helicopter-type sound in the ears. Your vehicle may exhibit wind buffeting with the windows down, or the sunroof (if equipped) in certain open or partially open positions. This is a normal occurrence and can be minimized. If the buffeting occurs with the rear windows open, then open the front and rear windows together to minimize the buffeting. If the buffeting occurs with the sunroof open, adjust the sunroof opening to minimize the buffeting or open any window.

Power Sun Shade

Opening Power Shade — Automatic Mode

Push the shade switch for about one-half second and the shade will automatically open. During the automatic open operation, any movement of the shade switch will stop the shade.

Opening Power Shade — Manual Mode

To open the shade part way (manually), push the shade switch briefly and release.

Closing Power Shade — Automatic Mode

Pull the shade switch for about one-half second and the shade will automatically close. During the automatic close operation, any movement of the shade switch will stop the shade.

Closing Power Shade — Manual Mode

To close the shade part way (manually), pull the shade switch briefly and release.

NOTE:

- The sunroof and the shade controls will operate only when the ignition is in the ON or RUN position.
- If the Remote Start functionality is active, it is not possible to move the sunroof.

Auto Reverse Feature

This feature will detect an obstruction in the opening of the sunroof during the Automatic Close operation. If an obstruction in the path of the sunroof is detected, the sunroof will automatically retract. Remove the obstruction if this occurs.

WARNING!

- **Do not let children play with the sunroof. Never leave children unattended in a vehicle, or with access to an unlocked vehicle. Do not leave the key fob in or near the vehicle, and do not leave the ignition of a vehicle equipped with Keyless Enter-N-Go in the ACC or ON/RUN mode. Occupants, particularly unattended children, can become entrapped by the power sunroof while operating the power sunroof switch. Such entrapment may result in serious injury or death.**
- **In a collision, there is a greater risk of being thrown from a vehicle with an open sunroof. You could also be severely injured or killed. Always fasten your seat belt properly and make sure all passengers are properly secured.**
- **Do not allow small children to operate the sunroof. Never allow your fingers, other body parts, or any object to project through the sunroof opening. Injury may result.**

Sunroof Maintenance

Use only a non-abrasive cleaner and a soft cloth to clean the glass panel.

HOOD

To Open The Hood

Two latches must be released to open the hood.

1. Pull the hood release lever located under the driver's side of the instrument panel.
2. Move to the outside of the vehicle and push the safety latch release lever toward the passenger side of the vehicle. The hood release lever is located behind the center front edge of the hood.

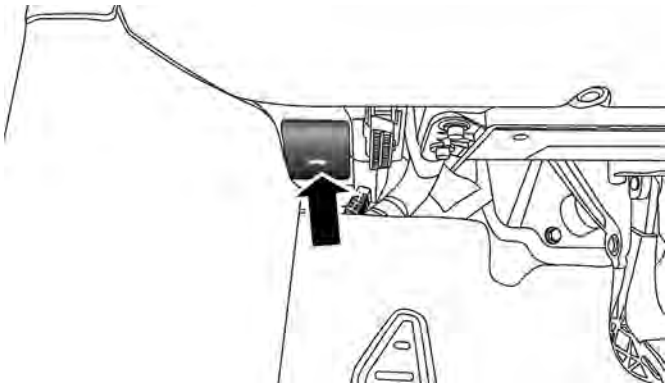

Hood Release Lever

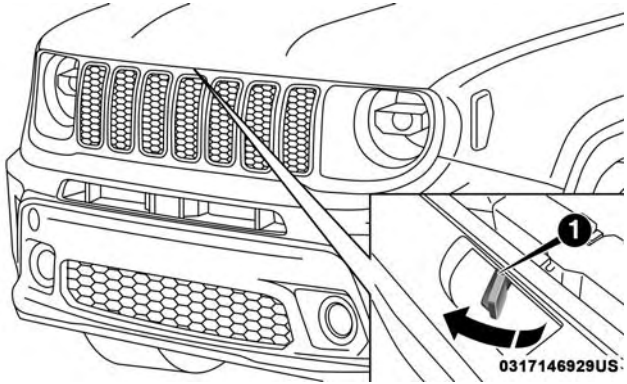

Safety Latch

1 — Safety Latch Location

Remove the support rod from the locking tab and insert it into the seat located on the underside of the hood. Be sure the rod is locked into position.

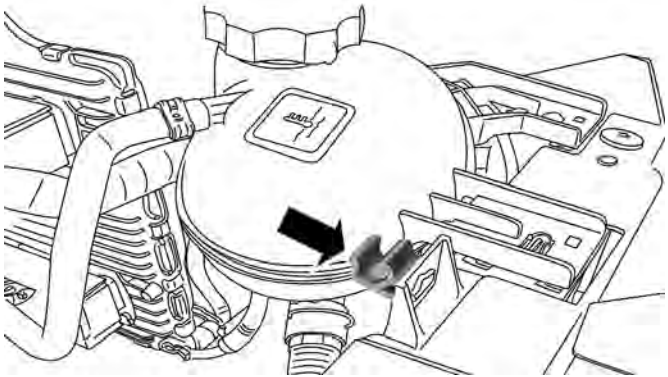

Locking Tab

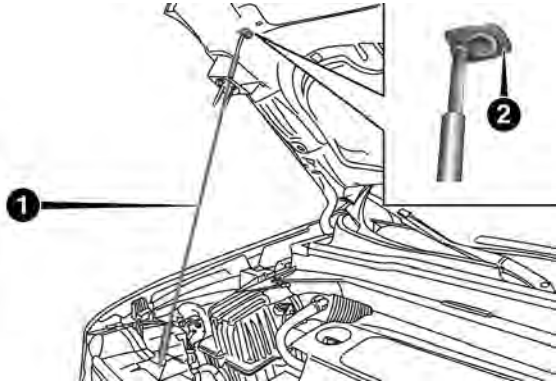

Support Rod And Seat

1 — Support Rod
2 — Support Rod Seat

To Close The Hood

Hold up the hood with one hand, and with the other hand, remove the support rod from its seat and reinsert it into the locking tab.

Lower the hood to approximately 12 inches (30 cm) from the engine compartment and drop. Make sure that the hood is completely closed.

WARNING!

Be sure the hood is fully latched before driving your vehicle. If the hood is not fully latched, it could open when the vehicle is in motion and block your vision. Failure to follow this warning could result in serious injury or death.

CAUTION!

To prevent possible damage, do not slam the hood to close it. Lower hood to approximately 12 inches (30 cm) and drop the hood to close. Make sure hood is fully closed for both latches. Never drive vehicle unless hood is fully closed, with both latches engaged.

LIFTGATE

Opening

To unlock the liftgate, use the key fob or activate the power door lock switches located on the driver door handle.

To open the liftgate, squeeze the electronic liftgate release and pull the liftgate open with one fluid motion.

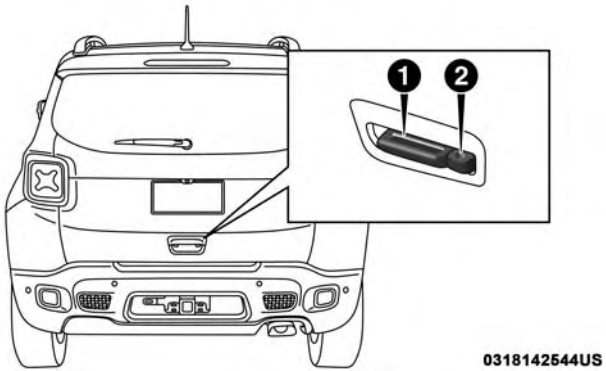

Liftgate Handle Location

1 — Liftgate Handle
2 — Liftgate Passive Entry Location

The Liftgate Passive Entry unlock feature is built into the Electronic Liftgate release. With a valid Passive Entry key fob within 5 ft (1.5 m) of the Liftgate, push the Electronic Liftgate release to open with one fluid motion.

Emergency Opening

Proceed as follows:

1. Remove the rear shelf (if equipped).
2. Fold the rear seats forward.
3. Using the supplied screwdriver (located under cargo floor in tool kit), remove the yellow tab.

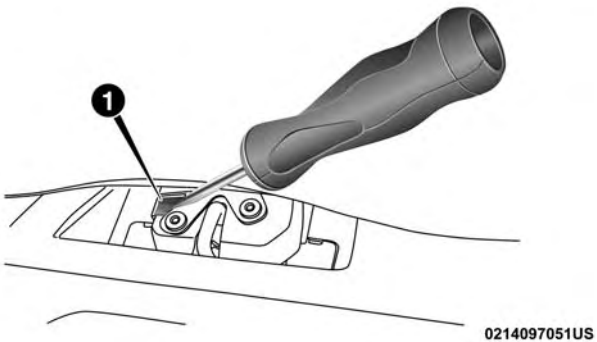

Emergency Opening Tab Location

1 — Yellow Tab

4. Insert the screwdriver into the release tab slot to trigger the release tab of the liftgate.

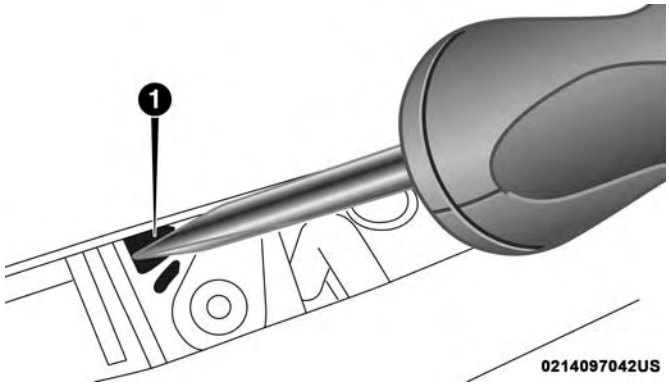

Emergency Release Tab Slot Location

1 — Release Tab Slot

Closing

Grasp the liftgate pull handle and initiate lowering the liftgate. Release the handle when the liftgate reaches self closing position.

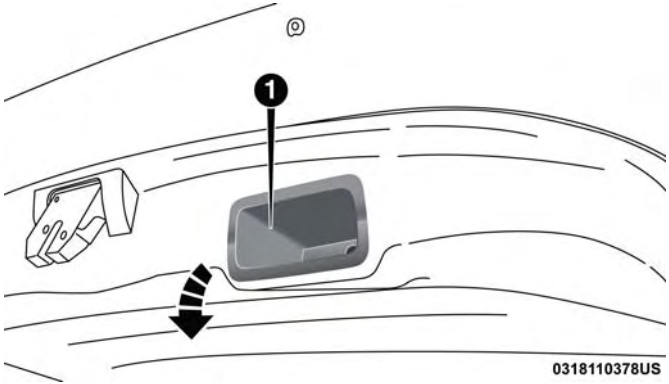

Closing Liftgate

1 — Liftgate Pull Handle

NOTE: Before closing the liftgate, make sure to be in possession of the key because the liftgate may be locked.

To Lock The Liftgate

With a valid Passive Entry key fob within 5 ft (1.5 m) of the liftgate, pushing the Keyless Enter-N-Go — Passive Entry lock button located to the right of the outside handle release will lock the vehicle.

NOTE: The liftgate unlock feature is built into the electronic liftgate release.

Cargo Area Features

Removable Rear Shelf — If Equipped

To remove rear shelf, proceed as follows:

1. Disconnect the two links that support the shelf at the eyelets.

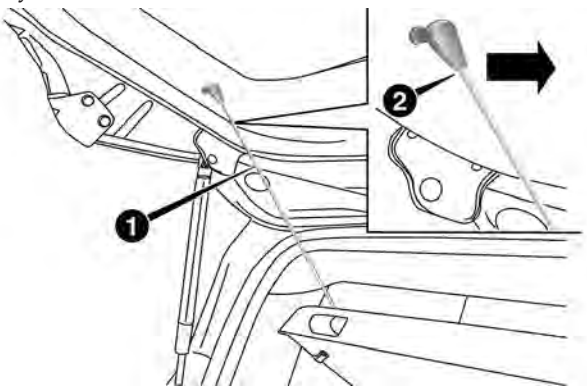

Rear Shelf Support Links

1 — Links
2 — Eyelets

2. Lift the rear part of the overhead luggage shelf.
3. Clear the pins placed outside of the shelf, and then remove the rear shelf pulling it upwards.
4. The rear shelf can be stored in the cargo area, or behind the front seatbacks.

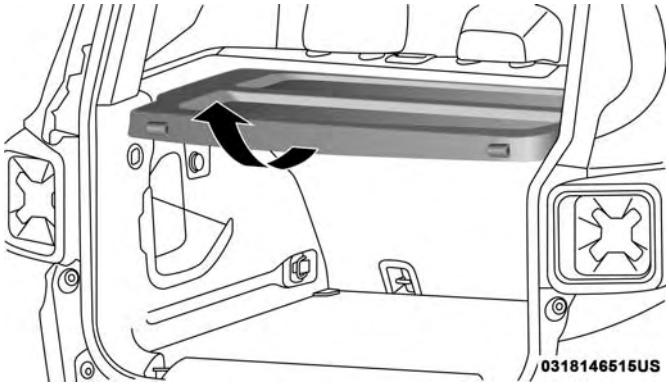

Adjusting The Rear Shelf

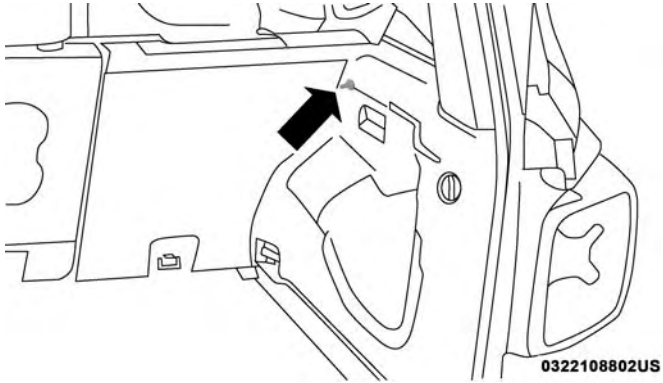

Rear Shelf Pin

Cargo Load Floor

The vehicle is equipped with a load floor that can be adjusted as needed.

Position 1 (Lowered Position):

This position allows you to make the load floor flat for ease of loading/unloading objects from the cargo area. This position also makes it possible to use the space below as another compartment for storing fragile or smaller objects.

Position 2 (Elevated Position):

When the rear seatbacks and front passenger seat is folded flat, it will allow for loading objects of long dimensions. It is recommended to use this position only during the actual transporting of the objects, then bring the load floor in position 1.

Table Tilt Load

In addition to the two positions described above, the load floor can also be placed in a tilted position, slanted toward the rear seatbacks as to ease the access to the underlying zone of the luggage compartment (e.g. to pick up the spare tire or the Tire Service Kit).

Place the load floor in a way that it rests at the supports 1 and 2 on the sides of the cargo area.

The load floor provides securing of any cargo inside this position, so that the cargo will slide in the case of sudden braking.

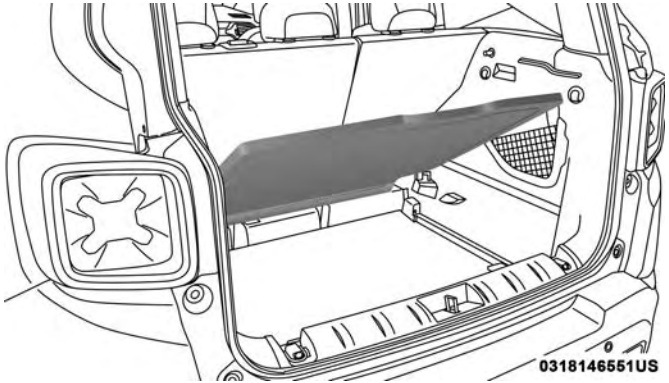

Load Floor

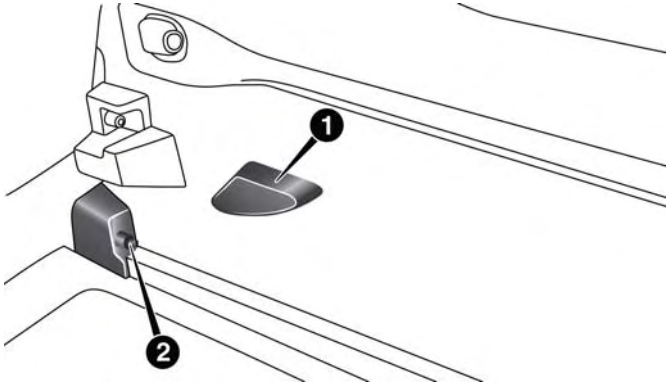

Table Tilt Load Supports

1 — Loading Floor Support One
2 — Loading Floor Support Two

Access To The Loading Floor

To access the double load compartment, proceed as follows:

1. Lift up on the Load Floor Handle.

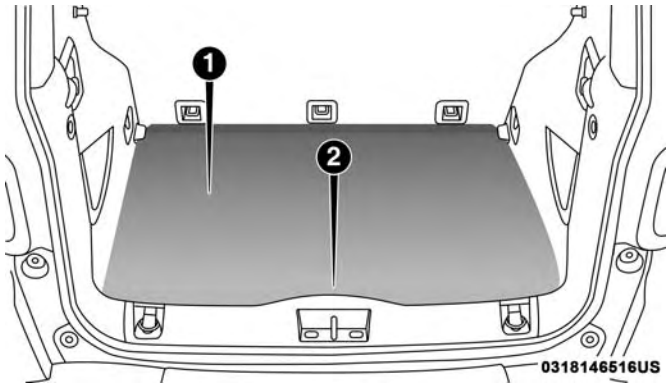

Load Floor Handle

1 — Cargo Load Floor
2 — Cargo Load Floor Handle

2. Place the desired objects inside the compartment.
3. Reposition the load floor.

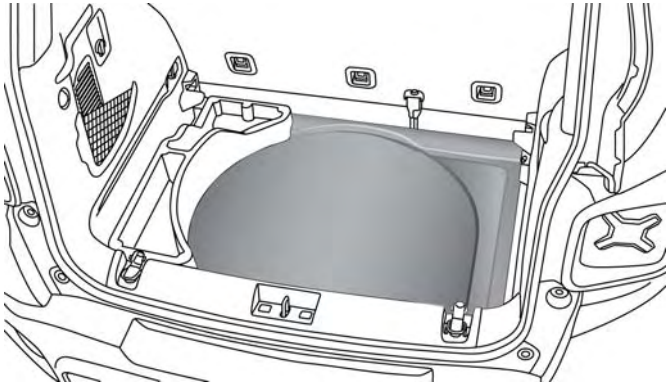

Cargo Area Storage

CAUTION!

The load floor must be arranged in a central position with respect to cargo area.

Displacement Load Floor

To position the load from the lower to the upper position, proceed as follows:

1. Grasp the load floor handle and lift up the load floor.
2. Correctly place the load floor on the side panel guides and on the rear cross member.

Access To Tire Service Kit Or Spare Tire

To access the Tire Service Kit or spare tire and container carrier, proceed as follows:

1. Grasp the load floor handle and remove the floor.
2. Pull the tab and lift up on the carpet.

Anchoring Of The Load

The cargo tie-downs, located on the cargo area floor, should be used to safely secure loads when the vehicle is moving.

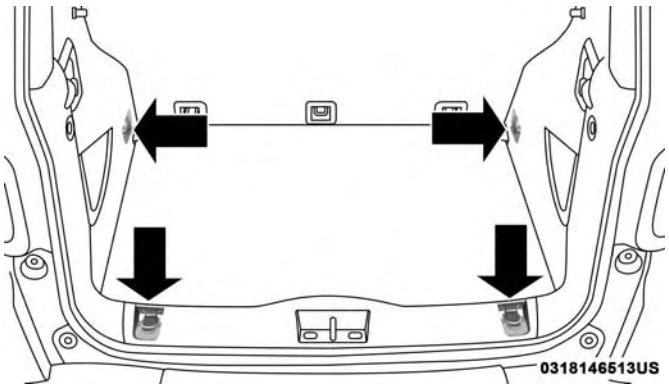

Tie-Downs

The side panels may be equipped with three grocery hooks (one on the left side and two on the right side) for securing loads that are not excessively heavy.

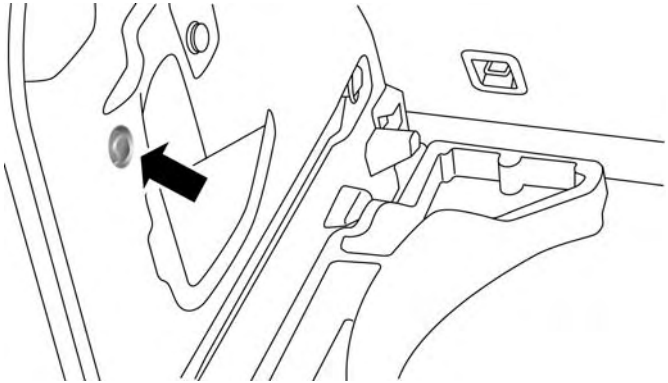

Grocery Hook

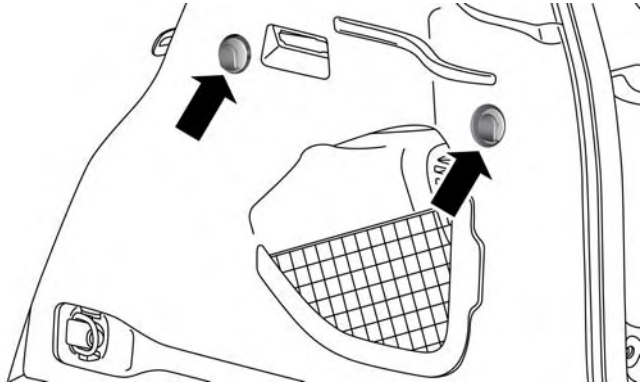

Grocery Hooks

Cargo Box — If Equipped

The cargo area contains a preformed cargo box that can be used for the storage of objects that allows you to obtain a uniform level when loading.

Cargo Box

NOTE: The cargo box is sized for a maximum capacity of distributed weight equal to 242 lbs (110 kg).

INTERNAL EQUIPMENT

Glove Compartment

The glove compartment is located on the passenger's side of the instrument panel.

To open the glove compartment proceed as follows:

1. Unlock the compartment using the vehicle emergency key.
2. Pull the handle to open the compartment.

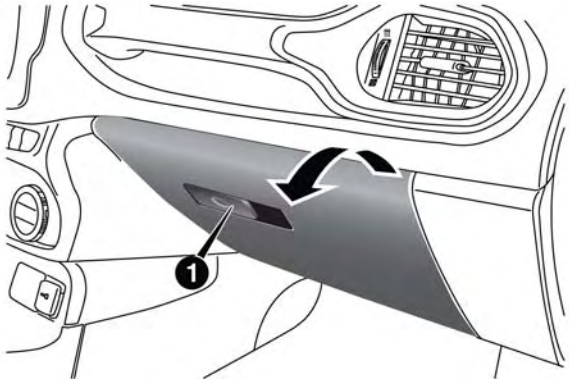

Opening The Glove Compartment

1 — Glove Compartment Handle

Once the glove compartment is open, a light will turn on to illuminate the compartment.

NOTE:

- Do not insert objects in the glove compartment that will not allow the compartment to fully close.
- The glove compartment should be completely closed while the vehicle is in motion.

Sun Visors

Sun visors are located on both sides of the rearview mirror. The visors can be lowered or moved to the side to help block sunlight from entering the windshield or door glass.

To move the sun visor against the driver or passenger door glass, remove the sun visor from the hook and turn it toward the side window.

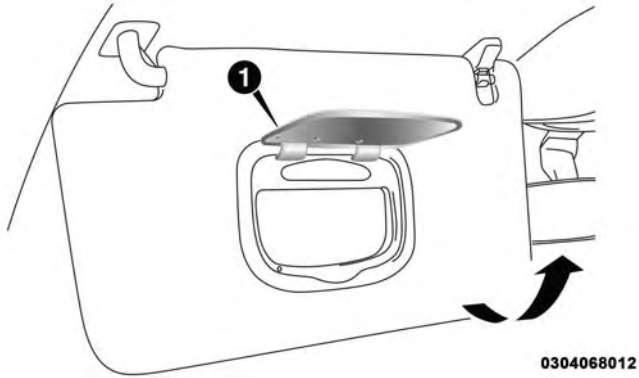

Sun Visor Mirror

1 — Sun Visor Mirror Cover

The visors also have illuminated vanity mirrors to allow use in low light conditions.

Lift upward on the mirror cover to access the mirror.

Extendible Sun Visor

To extend the sun visor, proceed as follows:

1. Place the sun visor against the door glass by detaching it from the hook and turning it toward the side window.
2. Slide the visor along the rod to provide coverage more to the rear.

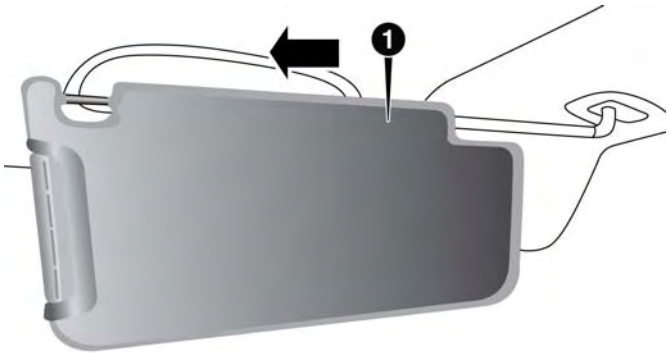

Sliding Sun Visor

1 — Sun Visor

3. Slide out the sun visor extender for even more side coverage toward the rear.

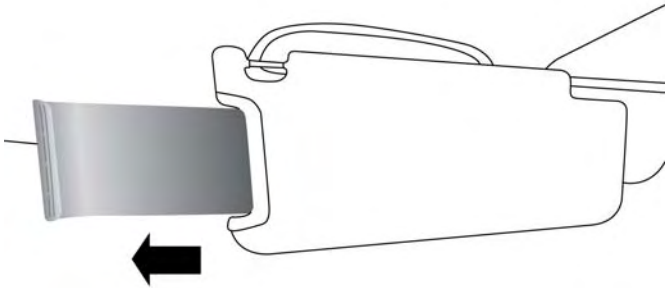

Using The Extender

Power Outlets

The front power outlet is located under the center stack of the instrument panel. It only operates with the ignition in the RUN position.

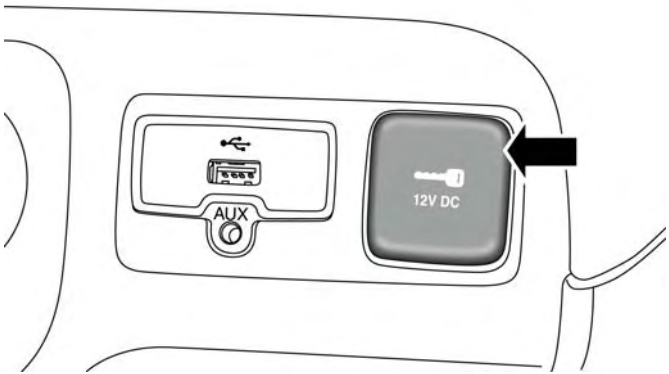

12 Volt Power Outlet

Models equipped with the optional "smoker kit," will have a cigar lighter instead of the power outlet. Refer to "Cigar Lighter" in "Internal Equipment" for further information.

WARNING!

To avoid serious injury or death:

- **Only devices designed for use in this type of outlet should be inserted into any 12 Volt outlet.**
- **Do not touch with wet hands.**
- **Close the lid when not in use and while driving the vehicle.**
- **If this outlet is mishandled, it may cause an electric shock and failure.**

CAUTION!

Do not connect devices with power higher than 180 Watts (15 Amps) to the socket. Do not damage the socket by using unsuitable adaptors. If the 180 Watt (15 Amp) power rating is exceeded the fuse protecting the system will need to be replaced.

CAUTION!

- **Many accessories that can be plugged in draw power from the vehicle's battery, even when not in use (i.e., cellular phones, etc.). Eventually, if plugged in long enough, the vehicle's battery will discharge sufficiently to degrade battery life and/or prevent the engine from starting.**
- **Accessories that draw higher power (i.e., coolers, vacuum cleaners, lights, etc.) will degrade the battery even more quickly. Only use these intermittently and with greater caution.**
- **After the use of high power draw accessories, or long periods of the vehicle not being started (with accessories still plugged in), the vehicle must be driven a sufficient length of time to allow the generator to recharge the vehicle's battery.**

Power Inverter — If Equipped

There is a 115 Volt, 150 Watt Power Inverter outlet located on the back of the center console to convert DC current to AC current. The Power Inverter can power cellular phones, electronics and other low power devices requiring up to 150 Watts. Certain high-end video game consoles will exceed this power limit, as will most power tools.

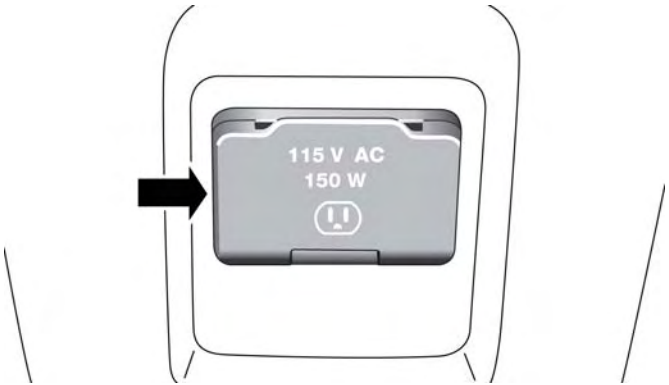

115 Volt Power Inverter

The Power Inverter will automatically turn on and off when the device is plugged in or removed.

In order for the Power Inverter to work, the engine must be running and there must be no faults detected with the alternator.

The Power Inverter is designed with built-in overload protection. If the power rating of 150 Watts is exceeded, the Power Inverter will automatically shut down. Once the electrical device has been removed from the Power Inverter it will automatically reset. To avoid overloading the circuit, check the power ratings on electrical devices prior to using the Power Inverter.

WARNING!

To avoid serious injury or death:
- **Do not insert any objects into the receptacles.**
- **Do not touch with wet hands.**
- **Close the lid when not in use.**
- **If this outlet is mishandled, it may cause an electric shock and failure.**

Cigar Lighter — If Equipped

NOTE: Cigar lighters can be purchased at an authorized dealer through Mopar parts.

The cigar lighter is located under the center stack of the Instrument Panel. Push lighter inward to heat.

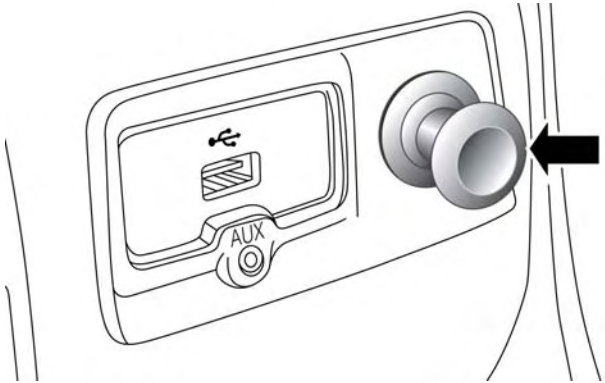

Cigar Lighter

After a few seconds, the lighter automatically returns to its initial position and is ready to be used.

WARNING!

When the cigar lighter is in use it becomes very hot. To avoid serious injury, handle the cigar lighter with care. Always check that the cigar lighter has turned off.

CAUTION!

Do not connect devices with power higher than 180 Watts (15 Amps) to the socket. Do not damage the socket by using unsuitable adaptors. If the 180 Watt (15 Amp) power rating is exceeded the fuse protecting the system will need to be replaced.

Ashtray — If Equipped

NOTE: Ashtrays can be purchased at an authorized dealer through Mopar parts.

The ashtray is a plastic container that can be placed into one of the cup holders.

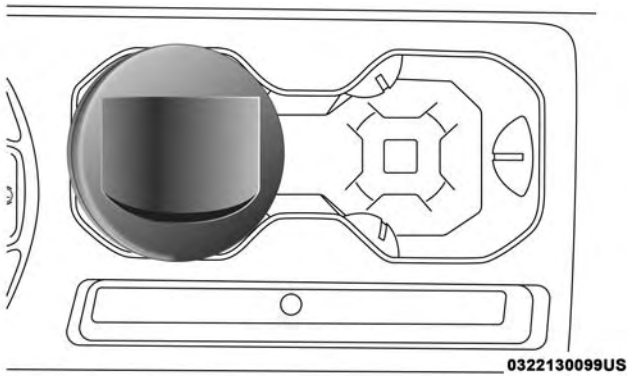

Ashtray Location

Front Armrest

The front armrest is located between the front seats.

The armrest can be adjusted by moving it forward or rearward.

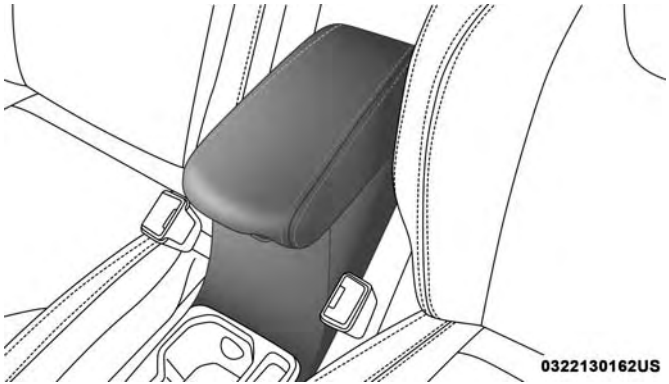

Front Armrest

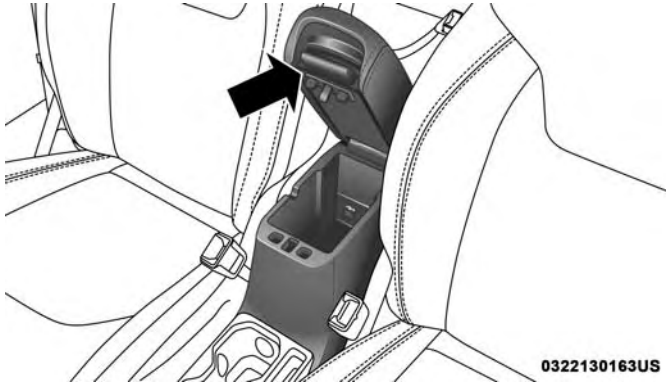

Storage Compartment

Push the storage handle and lift up the armrest to access the storage compartment.

WARNING!

Do not operate this vehicle with a console compartment lid in the open position. Driving with the console compartment lid open may result in injury in a collision.

Cupholders

There are two cupholders for the front seat passengers, located in the center console.

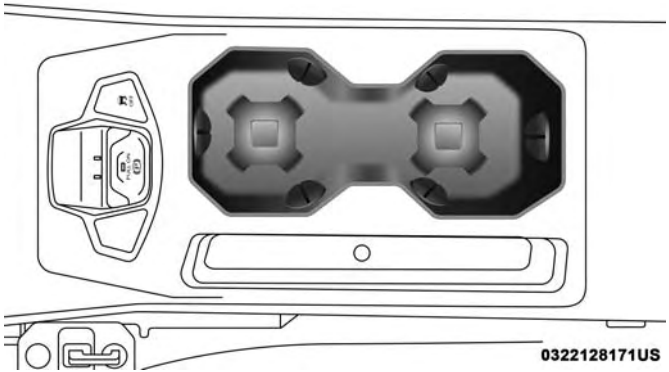

Front Cupholders

There are two cupholders located in the rear armrest if equipped.

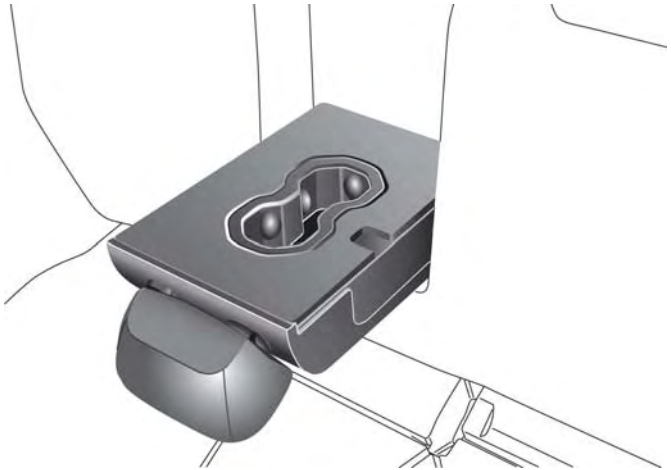

Rear Cupholders

Handle Grip

The handle grip is located on the passenger side of the instrument panel. The handle can be used to enter or exit the vehicle or when traveling on rough terrain.

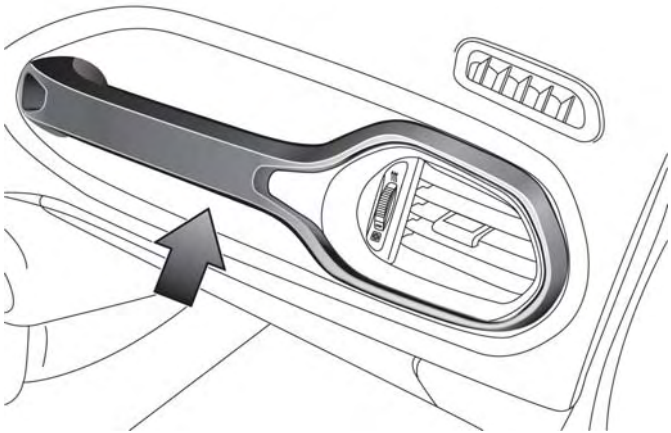

Handle Grip

ROOF LUGGAGE RACK — IF EQUIPPED

Your vehicle may be equipped with a Roof Luggage Rack for transporting accessories.

Crossbars should always be used whenever cargo is placed on the Roof Luggage Rack. Check the straps frequently to be sure that the load remains securely attached.

NOTE: Crossbars can be purchased at a authorized dealer through Mopar parts. External racks do not increase the total load carrying capacity of the vehicle. Be sure that the total occupant and luggage load inside the vehicle, plus the load on the Roof Luggage Rack, do not exceed the maximum vehicle load capacity.

The load carried on the roof, when equipped with a luggage rack, must not exceed 150 lbs (68 kg), and it should be uniformly distributed over the cargo area.

Do not use the retractable roof when using the crossbars.

WARNING!

Cargo must be securely tied down before driving your vehicle. Improperly secured loads can fly off the vehicle, particularly at high speeds, resulting in personal injury or property damage. Follow the roof rack cautions when carrying cargo on your roof rack.

CAUTION!

- **To avoid damage to the roof rack and vehicle, do not exceed the maximum roof rack load capacity. Always distribute heavy loads as evenly as possible and secure the load appropriately.**
- **Long loads, which extend over the windshield, should be secured to both the front and rear of the vehicle.**
- **Place a blanket or other protection between the surface of the roof and the load.**

(Continued)

CAUTION! ***(Continued)***

- **Travel at reduced speeds and turn corners carefully when carrying large or heavy loads on the roof rack. Wind forces, due to natural causes or nearby truck traffic, can add sudden upward loads. It is recommended to not carry large flat loads, such as wood panels or surfboards, which may result in damage to the cargo or your vehicle.**
- **Load should always be secured to cross bars first, with tie down loops used as additional securing points if needed. Tie loops are intended as supplementary tie down points only. Do not use ratcheting mechanisms with the tie loops. Check the straps frequently to be sure that the load remains securely attached.**

GETTING TO KNOW YOUR INSTRUMENT PANEL

CONTENTS

- INSTRUMENT CLUSTER. 118
  - Instrument Cluster Descriptions. 119
- INSTRUMENT CLUSTER DISPLAY 120
  - Instrument Cluster Display Location And Controls 121
  - Oil Change Reset 122
  - Instrument Cluster Display Menu Items 123
- TRIP COMPUTER. 128
- WARNING/INDICATOR LIGHTS AND MESSAGES 129
  - Red Warning Lights 130
  - Yellow Warning Lights 134
  - Yellow Indicator Lights. 138
  - White Indicator Lights 140
  - Blue Indicator Lights 141
  - Green Indicator Lights 141
  - Gray Indicator Lights 142
- ONBOARD DIAGNOSTIC SYSTEM (OBD II) 142
  - Onboard Diagnostic System (OBD II) Cybersecurity 142
- EMISSIONS INSPECTION AND MAINTENANCE PROGRAMS 143

INSTRUMENT CLUSTER

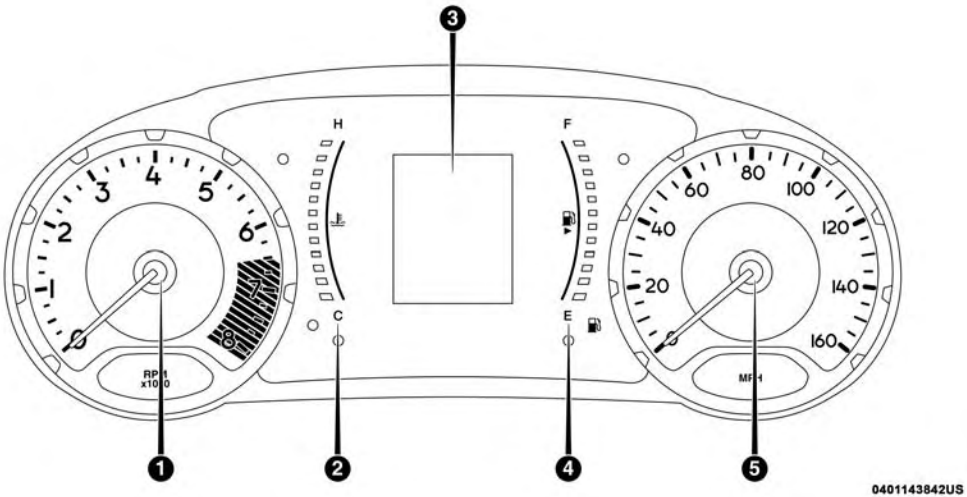

Base Instrument Cluster

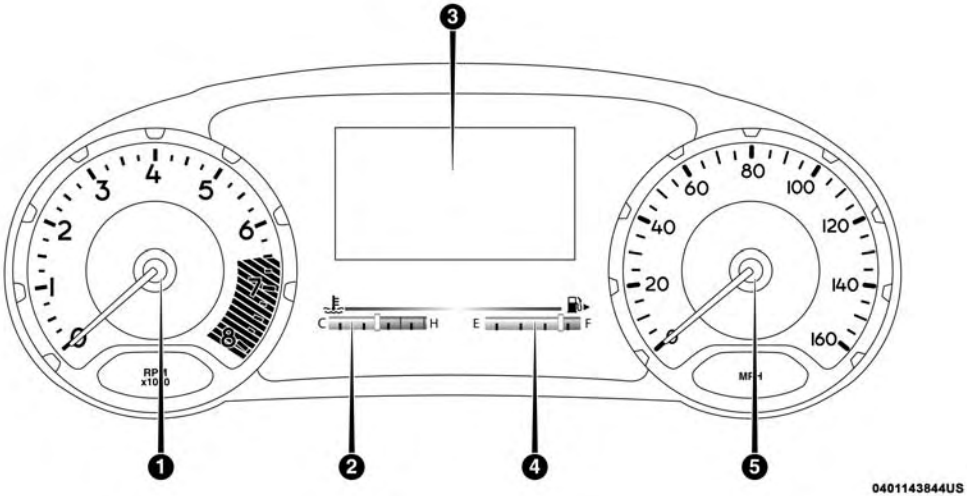

Premium Instrument Cluster

Instrument Cluster Descriptions

1. Tachometer
   - Indicates the engine speed in revolutions per minute (RPM x 1000).
2. Temperature Gauge
   - The temperature gauge shows engine coolant temperature. Any reading within the normal range indicates that the engine cooling system is operating satisfactorily.
   - The gauge will likely indicate a higher temperature when driving in hot weather or up mountain grades. It should not be allowed to exceed the upper limits of the normal operating range.

WARNING!

A hot engine cooling system is dangerous. You or others could be badly burned by steam or boiling coolant. You may want to call an authorized dealer for service if your vehicle overheats.

CAUTION!

Driving with a hot engine cooling system could damage your vehicle. If the temperature gauge reads "H" pull over and stop the vehicle. Idle the vehicle with the air conditioner turned off until the pointer drops back into the normal range. If the pointer remains on the "H", turn the engine off immediately and call an authorized dealer for service.

3. Instrument Cluster Display
   - The instrument cluster display features a driver-interactive display. Refer to "Instrument Cluster Display" in "Getting To Know Your Instrument Panel" for further information.
4. Fuel Gauge
   - The fuel gauge shows the level of fuel in the fuel tank when the ignition is in the ON/RUN position.
   - The fuel pump symbol points to the side of the vehicle where the fuel door is located.
5. Speedometer
   - Indicates vehicle speed.

INSTRUMENT CLUSTER DISPLAY

Your vehicle may be equipped with an instrument cluster display, which offers useful information to the driver. With the ignition in the STOP/OFF position, opening/closing of a door will activate the display for viewing, and display the total miles, or kilometers, in the odometer. Your instrument cluster display is designed to display important information about your vehicle's systems and features. Using a driver interactive display located on the instrument panel, your instrument cluster display can show you how systems are working and give you warnings when they aren't. The steering wheel mounted controls allow you to scroll through and enter the main menus and submenus. You can access the specific information you want and make selections and adjustments.

Instrument Cluster Display Location And Controls

The instrument cluster display features a driver-interactive display that is located in the instrument cluster.

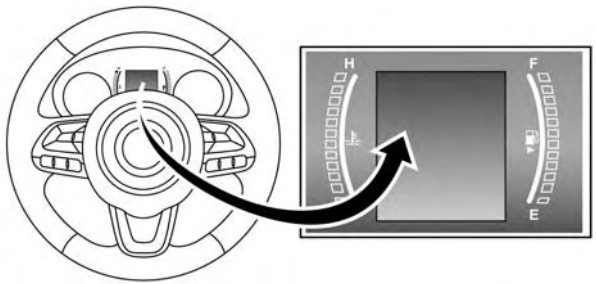

0402108862US

Instrument Cluster Display Location

The instrument cluster display menu items consist of the following:

- Speedometer
- Vehicle Info
- Driver Assist
- Fuel Economy
- Trip
- Stop/Start — If Equipped
- Audio
- Messages
- Screen Setup
- Settings

Setting the system allows the driver to select information by pushing the following buttons mounted on the steering wheel:

0410096381US

Instrument Cluster Display Control Buttons

- *UP Arrow Button*

△ Push and release the **up** arrow button to scroll upward through the main menu and submenus.

- *DOWN Arrow Button*

▽ Push and release the **down** arrow button to scroll downward through the main menu and submenus.

- *RIGHT Arrow Button*

▷ Push and release the **right** arrow button to access the information screens or submenu screens of a main menu item.

- *BACK/LEFT Arrow Button*

◁ Push and release the **left** arrow button to access the information screens or submenu screens of a main menu item.

- *OK Button*

The **OK** button may be used to confirm selection or held to reset specific screens.

Oil Change Reset

Oil Change Due

Your vehicle is equipped with an engine oil change indicator system. The "Oil Change Due" message will display in the instrument cluster display for five seconds after a single chime has sounded to indicate the next scheduled oil change interval. The engine oil change indicator system is duty cycle based, which means the engine oil change interval may fluctuate, dependent upon your personal driving style.

Unless reset, this message will continue to display each time you turn the ignition is cycled to the ON or RUN position. To reset the oil change indicator system (after performing the scheduled maintenance), refer to the following procedure:

1. Without pushing the brake pedal, push the ENGINE START/STOP button and cycle the ignition to the ON/RUN position (do not start the engine).
2. Fully push the accelerator pedal, slowly, three times within 10 seconds.
3. Without pushing the brake pedal, push the ENGINE START/STOP button once to return the ignition to the OFF/LOCK position.

NOTE: If the indicator message illuminates when you start the vehicle, the oil change indicator system did not reset. See an authorized dealer to have the oil life reset.

Instrument Cluster Display Menu Items

NOTE: The instrument cluster display menu items display in the center of the instrument cluster. Menu items may vary depending on your vehicle features.

Speedometer

Push and release the **up** or **down** arrow button until the speedometer is displayed in the instrument cluster display. Push and release the **OK** button to toggle units (mph or km/h) of the speedometer.

Vehicle Info

Push and release the up or down arrow button until "Vehicle Info" is highlighted in the instrument cluster display. Push and release the right arrow button and Coolant Temp will be displayed. Push the right or left arrow button to scroll through the following information displays:

- Tire Pressure — View the information relating to the TPMS system (If Equipped).
- Coolant Temperature — View the engine coolant temperature.
- Trans Temperature — View the trans oil temperature.
- Oil Temperature — View the oil temperature.
- Battery Voltage — View the voltage value (state of charge) of the battery.
- Service — If Equipped — View the service status message(s).

Driver Assist — If Equipped

Push and release the **up** or **down** arrow button until the Driver Assist menu title is displayed is highlighted in the instrument cluster display.

LaneSense — If Equipped

The instrument cluster display displays the current LaneSense system settings. The information displayed depends on LaneSense system status and the conditions that need to be met.

Fuel Economy

This menu item allows you to view the fuel economy of the vehicle. The following will display:

- Range (Miles or km)

- Current Consumption (mpg or L/100km or km/l)
- Average Consumption (mpg or L/100km or km/l)

Reset procedure shown at the bottom of the display.

Trip Info

Push and release the **up** or **down** arrow button until the Trip menu title is displayed in the instrument cluster display. Toggle the **left** or **right** arrow button to select Trip A or Trip B. The Trip information will display the following:

- Distance – Shows the total distance (mi or km) traveled for Trip A or Trip B since the last reset.
- Average Fuel Economy – Shows the average fuel economy (MPG or L/100 km or km/L) of Trip A or Trip B since the last reset.
- Elapsed Time – Shows the total elapsed time of travel since Trip A or Trip B has been reset.

Hold the **OK** button to reset feature information.

Stop/Start – If Equipped

Push and release the **up** or **down** arrow button until the Stop/Start menu title is displayed in the instrument cluster display.

This menu shows messages related to Stop/Start. Only one message can be viewed at a time until the condition is cleared. When the Start/Stop is engaged (and the engine is off), the associated hardware telltale is turned on. Whenever a user pushes the Stop/Start button on the central stack, a pop up message of the Stop/Start status will appear on the instrument cluster display.

Audio

Push and release the **up** or **down** arrow button until the Audio menu title is displayed in the instrument cluster display.

Stored Messages

Push and release the **up** or **down** arrow button until the Messages Menu Icon is highlighted in the instrument cluster display. This feature shows the number of stored warning messages. Pushing the **left** or **right** arrow button will allow you to scroll through the stored messages.

Screen Setup

This menu item allows you to change the position of the information on the display.

Display Gears (Vehicles With Reconfigurable Multi-Functional Display And Automatic Transmission)

By selecting this item, you can select the display mode, the particulars relating to the automatic transmission, and choose between the following options:

- *"Single digit"*

The right side of the display will show the letter concerning the automatic transmission gear selector (P,R,N or D) position. After approximately two seconds, the letter will be displayed in a central position.

- *"Full PRND"*

(Default): The letters PRND will display on the right side, the position assumed by the gear selector will be highlighted in the display. During the operation in sequential mode ("AutoStick"), in place of the letter D, the gear will be will be displayed.

In The Upper-Left/Top Right

The information relating to the following can be displayed:

- External temperature
- Ignition Button — If Equipped
- Compass — If Equipped
- Date (Month/Day)
- Time (Hours/Minutes)

In the central area of the display, you can view all of the information listed above as well as the following:

- Compass — If Equipped
- Speed Display — If Equipped
- Date (Day/Month/Year)
- Time
- Compass — If Equipped
- Ignition Button — If Equipped
- External Temp — If equipped
- Menu Item
- Distance Traveled A (Trip A)
- Distance Traveled B (Trip B)

Restore Default Settings

Selecting this item, and you can reset and restore the default settings.

Settings

This menu item allows you to change the settings for the following:

- Display
- Units
- Clock and Date
- Security
- Safety and Assistance
- Lights
- Doors and Locks

NOTE: Some items may be displayed and managed through the Uconnect system.

Vehicles Equipped With Multifunctional Display Reconfigurable: The following menu/submenu items are available in the cluster display.

"Vehicle Shut Off (If Equipped)"

By selecting the item "Vehicle Shut Off", you can turn off the engine from the instrument cluster. This feature is available in the event of an ignition switch failure, and will display instructions for turning off the engine via the instrument cluster display controls.

"Display"

By selecting the "Display," you can access the following setting:

- **Language**: allows you to select the language in which to display the information/warnings.

"Units Of Measure"

By selecting the item "Units of Measure," you can select the unit of measure to use for displaying various magnitudes.

Possible options are:

- US
- Metric
- Custom

"Clock & Date"

By selecting the item, "Clock & Date" you can adjust the clock.

Possible options are:

- Set Time: adjust hours/minutes
- Set Format: adjust the time format "12h" (12 hours) or " 24h" (24 hours)
- Set Date: adjust day/month/year

"Security"

By selecting the item "Security," you can make the following adjustments:

- ***Speed Warning:***

Set the vehicle speed limit, which the driver is notified through a visual and acoustic signaling (display of a message and a symbol on the display).

When the speed warning is set, the icon should remain visualized for the same duration time of the pop up. If the driver exceeded the set speed, the icon should remain for however long the vehicle is over the set speed.

Driver may also turn the Speed Warning "OFF" should you choose not to use this feature.

- ***Seat Belt Reminder:***

This function is only viewable when the Seat Belt Reminder (SBR) system is active.

- ***Hill Start Assist:***

Activation/Deactivation of the Hill Start Assist system.

- ***Passenger Air Bag — If Equipped***

Front passenger air bag may be enabled or disabled.

"Lights"

By selecting the item "Lights," you can make the following adjustments:

- Headlight Off Delay: set the delay for headlight shutoff after engine shutoff
- Headlight Sensitivity: adjust the sensitivity of headlight brightness
- Daytime Running Lights: activate/deactivate the daytime running lights
- Cornering lights: activate/deactivate the cornering lights (If Equipped)
- Interior Ambient lights: adjust the level of interior ambient lights
- Greeting Lights: activate / deactivate greeting lights

"Doors & Locks"

By selecting the item "Doors & Locks," you can make the following adjustments:

- Auto Door Lock: activate/deactivate the automatic locking of the doors with the vehicle moving
- Auto Unlock On Exit: automatic unlocking of the doors when exiting the vehicle

- Flash Light with Lock: activate the direction indicators when closing the doors
- Sound Horn With Lock: activate/deactivate the horn when pushing the LOCK button on the key fob. The options are "Off," "First Press," and "Second Press"
- Horn With Remote Start: activate/deactivate the horn at the Remote Starting of the engine with the key fob
- Remote Door Unlock: allows you to open the driver door only on the first push of the UNLOCK button on the key fob
- Passive Entry (If Equipped) : activate the automatic locking of the doors

"Compass"

By selecting the item "Compass" you can make the following adjustments:

- Compass Calibration
- Compass Variance

TRIP COMPUTER

The Trip computer is used to display information on car operation when the key is turned to the RUN position.

This function allows you to define two separate trips called "Trip A" and "Trip B" where the car's "complete trips" are monitored in an independent manner.

Both trips can be reset (reset - start of a new trip). To perform a reset, push and hold the **OK** button on the steering wheel controls.

"Trip A" and "Trip B" are used to display the figures relating to:

- Distance Travelled
- Average Consumption
- Travel Time (driving time)

Quantities Displayed

Distance Travelled

- Indicates the distance travelled by the start of the new trip.

Average Consumption

- Represents the average fuel consumption since the start of the new trip.

Travel Time

- Elapsed time since the start of the new trip.

OK Button

Short Push Of The Button: display of various parameters.

Long Push Of The Button: reset quantities and begin a new trip.

New trip

Starts after reset:

- "Manual" by pushing the **OK** button.
- "Automatic" when the "distance" reaches the value of 62140 (99999.9 km) or when the "time travel" reaches the value of 999.59 (999 hours and 59 minutes).
- After each disconnection and reconnection of the battery.

WARNING/INDICATOR LIGHTS AND MESSAGES

The warning/indicator light switches on in the instrument panel together with a dedicated message and/or acoustic signal when applicable. These indications are indicative and precautionary and as such must not be considered as exhaustive and/or alternative to the information contained in the Owner Manual, which you are advised to read carefully in all cases. Always refer to the information in this chapter in the event of a failure indication.

All active telltales will display first, if applicable. The system check menu may appear different based upon equipment options and current vehicle status. Some telltales are optional and may not appear.

The following warning lamps and indicators will alert you to a vehicle condition that may become serious. Some lamps will illuminate when you start your vehicle to make sure they work. If any lamps remain on after starting your vehicle, refer to the respective system warning lamp for further information.

Red Warning Lights

— Air Bag Warning Light

This light will turn on for four to eight seconds as a bulb check when the ignition is placed in the ON/RUN or MAR/ON/RUN position. If the light is either not on during startup, stays on, or turns on while driving, have the system inspected at an authorized dealer as soon as possible. This light will illuminate with a single chime when a fault with the Air Bag Warning Light has been detected, it will stay on until the fault is cleared. If the light comes on intermittently or remains on while driving, have an authorized dealer service the vehicle immediately.

BRAKE — Brake Warning Light (English) — Brake Warning Light (Metric)

This light monitors various brake functions, including brake fluid level and parking brake application. If the brake light turns on it may indicate that the parking brake is applied, that the brake fluid level is low, or that there is a problem with the anti-lock brake system reservoir.

If the light remains on when the parking brake has been disengaged, and the fluid level is at the full mark on the master cylinder reservoir, it indicates a possible brake hydraulic system malfunction or that a problem with the Brake Booster has been detected by the Anti-Lock Brake System (ABS) / Electronic Stability Control (ESC) system. In this case, the light will remain on until the condition has been corrected. If the problem is related to the brake booster, the ABS pump will run when applying the brake, and a brake pedal pulsation may be felt during each stop.

The dual brake system provides a reserve braking capacity in the event of a failure to a portion of the hydraulic system. A leak in either half of the dual brake system is indicated by the Brake Warning Light, which will turn on when the brake fluid level in the master cylinder has dropped below a specified level.

The light will remain on until the cause is corrected.

NOTE: The light may flash momentarily during sharp cornering maneuvers, which change fluid level conditions. The vehicle should have service performed, and the brake fluid level checked.

If brake failure is indicated, immediate repair is necessary.

WARNING!

Driving a vehicle with the red brake light on is dangerous. Part of the brake system may have failed. It will take longer to stop the vehicle. You could have a collision. Have the vehicle checked immediately.

Vehicles equipped with the Anti-Lock Brake System (ABS) are also equipped with Electronic Brake Force Distribution (EBD). In the event of an EBD failure, the Brake Warning Light will turn on along with the ABS Light. Immediate repair to the ABS system is required.

Operation of the Brake Warning Light can be checked by turning the ignition switch from the OFF position to the ON/RUN position. The light should illuminate for approximately two seconds. The light should then turn off unless the parking brake is applied or a brake fault is detected. If the light does not illuminate, have the light inspected by your authorized dealer.

The light also will turn on when the parking brake is applied with the ignition switch in the ON/RUN position.

NOTE: This light shows only that the parking brake is applied. It does not show the degree of brake application.

— Battery Charge Warning Light

This warning light will illuminate when the battery is not charging properly. If it stays on while the engine is running, there may be a malfunction with the charging system. Contact an authorized dealer as soon as possible.

This indicates a possible problem with the electrical system or a related component.

— Door Open Warning Light

This indicator will illuminate when a door is ajar/open and not fully closed.

— Electric Power Steering Fault Warning Light

This warning light will turn on when there's a fault with the EPS (Electric Power Steering) system. Refer to "Power Steering" in "Starting And Operating" for further information.

WARNING!

Continued operation with reduced assist could pose a safety risk to yourself and others. Service should be obtained as soon as possible.

— Electronic Throttle Control (ETC) Warning Light

This light informs you of a problem with the Electronic Throttle Control (ETC) system. If a problem is detected while the vehicle is running, the light will either stay on or flash depending on the nature of the problem. Cycle the ignition when the vehicle is safely and completely stopped and the transmission is placed in the PARK position. The light should turn off. If the light remains on with the vehicle running, your vehicle will usually be drivable; however, see an authorized dealer for service as soon as possible.

NOTE: This light may turn on if the accelerator and brake pedals are pressed at the same time.

If the light continues to flash when the vehicle is running, immediate service is required and you may experience reduced performance, an elevated/rough idle, or engine stall and your vehicle may require towing. The light will come on when the ignition is placed in the ON/RUN or ACC/ON/RUN position and remain on briefly as a bulb check. If the light does not come on during starting, have the system checked by an authorized dealer.

— Engine Temperature Warning Light

This warning light will illuminate to warn of an overheated engine condition. If the engine coolant temperature is too high, this light will illuminate and a single chime will sound.

If the light turns on while driving, safely pull over and stop the vehicle. If the A/C system is on, turn it off. Also, shift the transmission into NEUTRAL and idle the vehicle. If the temperature reading does not return to normal, turn the engine off immediately and call for service.

Refer to “If Your Engine Overheats” in “In Case Of Emergency” for further information.

— Hood Open Warning Light

This warning light will illuminate when the hood is left open and not fully closed.

NOTE: If the vehicle is moving, there will also be a single chime.

— Liftgate Open Warning Light

This indicator will illuminate when the liftgate is left open and not fully closed.

— Oil Pressure Warning Light

This warning light will illuminate to indicate low engine oil pressure. If the light turns on while driving, stop the vehicle, shut off the engine as soon as possible, and contact an authorized dealer. A chime will sound when this light turns on.

Do not operate the vehicle until the cause is corrected. This light does not indicate how much oil is in the engine. The engine oil level must be checked under the hood.

— Oil Pressure Sensor Failure Warning Light

This light will illuminate if there is a failure of the oil pressure sensor. If this light illuminates, take it to an authorized dealer and have them inspect it.

— Oil Temperature Warning Light

This warning light will illuminate to indicate the engine oil temperature is high. If the light turns on while driving, stop the vehicle and shut off the engine as soon as possible. Wait for oil temperature to return to normal levels.

— Seat Belt Reminder Warning Light

This warning light indicates when the driver or passenger seat belt is unbuckled. When the ignition is first placed in the ON/RUN or ACC/ON/RUN position and if the driver's seat belt is unbuckled, a chime will sound and the light will turn on. When driving, if the driver or front passenger seat belt remains unbuckled, the Seat Belt Reminder Light will flash or remain on continuously and a chime will sound.

Refer to "Occupant Restraint Systems" in "Safety" for further information.

— Transmission Fault Warning Light — If Equipped

This light will illuminate (together with a message in the instrument cluster display and a buzzer) to indicate a transmission fault. Contact your authorized dealer if the message remains after restarting the engine.

— Vehicle Security Warning Light — If Equipped

This light will flash at a fast rate for approximately 15 seconds when the vehicle security alarm is arming, and then will flash slowly until the vehicle is disarmed.

Yellow Warning Lights

— Active Speed Limiter Fault Indicator Light — If Equipped

This warning light will illuminate to signal when there is a fault detected with the Active Speed Limiter.

— Adaptive Cruise Control (ACC) Fault Warning Light — If Equipped

This warning light will illuminate to indicate a fault in the ACC system. Contact a local authorized dealer for service.

For further information, refer to “Adaptive Cruise Control (ACC)” in “Starting And Operating.”

— Anti-Lock Brake (ABS) Warning Light

This warning light monitors the Anti-Lock Brake System (ABS). The light will turn on when the ignition is placed in the ON/RUN or ACC/ON/RUN position and may stay on for as long as four seconds.

If the ABS light remains on or turns on while driving, then the Anti-Lock portion of the brake system is not functioning and service is required as soon as possible. However, the conventional brake system will continue to operate normally, assuming the Brake Warning Light is not also on.

If the ABS light does not turn on when the ignition is placed in the ON/RUN or ACC/ON/RUN position, have the brake system inspected by an authorized dealer.

— Audio System Failure Light — If Equipped

This light will illuminate to report a failure of the Audio System. Contact an authorized dealership as soon as possible.

— Electronic Park Brake Warning Light

This warning light will illuminate to indicate the Electronic Park Brake is not functioning properly and service is required. Contact an authorized dealer.

— Forward Collision Warning Off Indicator Light — If Equipped

This indicator light illuminates to indicate that Forward Collision Warning is off.

— Icy Road Condition Indicator Light — If Equipped

This light will illuminate during an icy road condition.

— Low Fuel Warning Light

When the fuel level reaches approximately 1.3–1.8 gal (5–7 L) this light will turn on, and remain on until fuel is added.

— LaneSense Warning Light — If Equipped

The LaneSense system provides the driver with visual and steering torque warnings when the vehicle starts to drift out of its lane unintentionally without the use of a turn signal.

- When the LaneSense system senses a lane drift situation, the LaneSense indicator changes from solid green to solid yellow.
- When the LaneSense system senses the lane has been approached and is in a lane departure situation, the LaneSense indicator changes from solid white/green to flashing yellow.
- Refer to "LaneSense – If Equipped" in "Starting And Operating" for further information.

— Service LaneSense Warning Light — If Equipped

This warning light will illuminate when the LaneSense system is not operating and requires service. Please see an authorized dealer.

— Engine Check/Malfunction Indicator Warning Light (MIL)

The Engine Check/Malfunction Indicator Light (MIL) is a part of an Onboard Diagnostic System called OBD II that monitors engine and automatic transmission control systems. This warning light will illuminate when the ignition is in the ON/RUN position before engine start. If the bulb does not come on when turning the ignition switch from OFF to ON/RUN, have the condition checked promptly.

The vehicle should be serviced if the light stays on through several typical driving styles. In most situations, the vehicle will drive normally and will not require towing.

When the engine is running, the MIL may flash to alert serious conditions that could lead to immediate loss of power or severe catalytic converter damage. The vehicle should be serviced as soon as possible if this occurs.

WARNING!

A malfunctioning catalytic converter, as referenced above, can reach higher temperatures than in normal operating conditions. This can cause a fire if you drive slowly or park over flammable substances such as dry plants, wood, cardboard, etc. This could result in death or serious injury to the driver, occupants or others.

CAUTION!

Prolonged driving with the Malfunction Indicator Light (MIL) on could cause damage to the vehicle control system. It also could affect fuel economy and driveability. If the MIL is flashing, severe catalytic converter damage and power loss will soon occur. Immediate service is required.

SERV 4WD — Service 4WD Warning Light — If Equipped

This warning light will illuminate to signal a fault with the 4WD system. If the light stays on or comes on during driving, it means that the 4WD system is not functioning properly and that service is required. We recommend you drive to the nearest service center and have the vehicle serviced immediately.

— Service Forward Collision Warning (FCW) Light — If Equipped

This warning light will illuminate to indicate a fault in the Forward Collision Warning System. Contact an authorized dealer for service.

Refer to "Forward Collision Warning (FCW)" in "Safety" for further information.

— Service Stop/Start System Warning Light — If Equipped

This warning light will illuminate when the Stop/Start system is not functioning properly and service is required. Contact an authorized dealer for service.

— Tire Pressure Monitoring System (TPMS) Warning Light

The warning light switches on and a message is displayed to indicate that the tire pressure is lower than the recommended value and/or that slow pressure loss is occurring. In these cases, optimal tire duration and fuel consumption may not be guaranteed.

Should one or more tires be in the condition mentioned above, the display will show the indications corresponding to each tire.

CAUTION!

Do not continue driving with one or more flat tires as handling may be compromised. Stop the vehicle, avoiding sharp braking and steering. If a tire puncture occurs, repair immediately using the dedicated tire repair kit and contact an authorized dealer as soon as possible.

Each tire, including the spare (if provided), should be checked monthly when cold and inflated to the inflation pressure recommended by the vehicle manufacturer on the vehicle placard or tire inflation pressure label. (If your vehicle has tires of a different size than the size indicated on the vehicle placard or tire inflation pressure label, you should determine the proper tire inflation pressure for those tires.)

As an added safety feature, your vehicle has been equipped with a Tire Pressure Monitoring System (TPMS) that illuminates a low tire pressure telltale when one or more of your tires is significantly under-inflated. Accordingly, when the low tire pressure telltale illuminates, you should stop and check your tires as soon as possible, and inflate them to the proper pressure. Driving on a significantly under-inflated tire causes the tire to overheat and can lead to tire failure. Under-inflation also reduces fuel efficiency and tire tread life, and may affect the vehicle's handling and stopping ability.

Please note that the TPMS is not a substitute for proper tire maintenance, and it is the driver's responsibility to maintain correct tire pressure, even if under-inflation has not reached the level to trigger illumination of the TPMS low tire pressure telltale.

Your vehicle has also been equipped with a TPMS malfunction indicator to indicate when the system is not operating properly. The TPMS malfunction indicator is combined with the low tire pressure telltale. When the system detects a malfunction, the telltale will flash for approximately one minute and then remain continuously illuminated. This sequence will continue upon subsequent vehicle start-ups as long as the malfunction exists. When the malfunction indicator is illuminated, the system may not be able to detect or signal low tire pressure as intended. TPMS malfunctions may occur for a variety of reasons, including the installation of replacement or alternate tires or wheels on the vehicle that prevent the TPMS from functioning properly. Always check the TPMS malfunction telltale after replacing one or more tires or wheels on your vehicle to ensure that the replacement or alternate tires and wheels allow the TPMS to continue to function properly.

CAUTION!

The TPMS has been optimized for the original equipment tires and wheels. TPMS pressures and warning have been established for the tire size equipped on your vehicle. Undesirable system operation or sensor damage may result when using replacement equipment that is not of the same size, type, and/or style. Aftermarket wheels can cause sensor damage. Using aftermarket tire sealants may cause the Tire Pressure Monitoring System (TPMS) sensor to become inoperable. After using an aftermarket tire sealant it is recommended that you take your vehicle to your authorized dealer to have your sensor function checked.

— Towing Hook Breakdown Warning Light — If Equipped

This light illuminates when there is a failure with the tow hook. Contact an authorized dealer for service.

— Transmission Temperature Warning Light

This light indicates that the transmission fluid temperature is running hot. This may occur with severe usage, such as trailer towing. If this light turns on, safely pull over and stop the vehicle. Then, shift the transmission into PARK and run the engine at idle or slightly higher until the light turns off.

WARNING!

If you continue operating the vehicle when the Transmission Temperature Warning Light is illuminated you could cause the fluid to boil over, come in contact with hot engine or exhaust components and cause a fire.

CAUTION!

Continuous driving with the Transmission Temperature Warning Light illuminated will eventually cause severe transmission damage or transmission failure.

Yellow Indicator Lights

4WD LOW — 4WD Low Indicator Light — If Equipped

This light alerts the driver that the vehicle is in the four-wheel drive LOW mode. The front and rear driveshafts are mechanically locked together forcing the front and rear wheels to rotate at the same speed. Low range provides a greater gear reduction ratio to provide increased torque at the wheels.

Refer to “Four-Wheel Drive Operation — If Equipped” in “Starting And Operating” for further information on four-wheel drive operation and proper use.

4WD LOCK — 4WD Lock Indicator Light

This light alerts the driver that the vehicle is in the four-wheel drive LOCK mode. The front and rear driveshafts are mechanically locked together, forcing the front and rear wheels to rotate at the same speed.

Refer to "Four-Wheel Drive Operation" in "Starting And Operating" for further information on four-wheel drive operation and proper use.

— Electronic Stability Control (ESC) Active Warning Light — If Equipped

This warning light will indicate when the Electronic Stability Control system is Active. The "ESC Indicator Light" in the instrument cluster will come on when the ignition is placed in the ON/RUN or ACC/ON/RUN position, and when ESC is activated. It should go out with the engine running. If the "ESC Indicator Light" comes on continuously with the engine running, a malfunction has been detected in the ESC system. If this warning light remains on after several ignition cycles, and the vehicle has been driven several miles (kilometers) at speeds greater than 30 mph (48 km/h), see an authorized dealer as soon as possible to have the problem diagnosed and corrected.

- The "ESC Off Indicator Light" and the "ESC Indicator Light" come on momentarily each time the ignition is placed in the ON/RUN or ACC/ON/RUN position.
- The ESC system will make buzzing or clicking sounds when it is active. This is normal; the sounds will stop when ESC becomes inactive.
- This light will come on when the vehicle is in an ESC event.

OFF — Electronic Stability Control (ESC) Off Warning Light — If Equipped

This warning light indicates the Electronic Stability Control (ESC) is off.

Each time the ignition is turned to ON/RUN or ACC/ON/RUN, the ESC system will be on, even if it was turned off previously.

— Exterior Bulb Failure Indicator Light — If Equipped

This light will illuminate when there is a malfunction in one of the exterior bulbs.

— Fuel Cutoff Warning Light — If Equipped

This warning light will illuminate after an accident has occurred, and the system has shut the fuel off.

— Fuel Cutoff Failure Light — If Equipped

This light will illuminate if there is a fuel cutoff failure. If this light illuminates, take it to an authorized dealer and have them inspect it.

— Immobilizer Fail / VPS Electrical Alarm Indicator Light

This telltale will illuminate when the vehicle security alarm system has detected an attempt to break into the vehicle.

NOTE: After cycling the ignition to the ON/RUN position, the Vehicle Security Warning Light could illuminate if a problem with the system is detected. This condition will result in the engine being shut off after two seconds.

SERV 4WD **— Service 4WD Warning Light — If Equipped**

This warning light will illuminate to signal a fault with the 4WD system. If the light stays on or comes on during driving, it means that the 4WD system is not functioning properly and that service is required. We recommend you drive to the nearest service center and have the vehicle serviced immediately.

White Indicator Lights

— Hill Descent Control (HDC) Indicator Light — If Equipped

This indicator shows when the Hill Descent Control (HDC) feature is turned on. The lamp will be on solid when HDC is armed. HDC can only be armed when the transfer case is in the "4WD LOW" position and the vehicle speed is less then 30 mph (48 km/h). If these conditions are not met while attempting to use the HDC feature, the HDC indicator light will flash on/off.

— Light Sensor Failure

This light illuminates when there is light sensor failure. If this light illuminates, have an authorized dealer inspect it.

55 **— Speed Warning Indicator Light — If Equipped**

When Set Speed Warning is turned on, the speed warning telltale will illuminate in the instrument cluster with a number matching the set speed. When the set speed is exceeded, a single chime will sound along with pop up message of "Speed Warning Exceeded." Speed Warning can be turned on and off in the instrument cluster display, for further information refer to "Instrument Cluster Display Menu Items" in "Getting To Know Your Instrument Panel."

The number "55" is only an example of a speed that can be set.

Blue Indicator Lights

— High Beam Indicator Light

This indicator light will illuminate to indicate that the high beam headlights are on. With the low beams activated, push the multifunction lever forward (toward the front of the vehicle) to turn on the high beams. Pull the multifunction lever rearward (toward the rear of the vehicle) to turn off the high beams. If the high beams are off, pull the lever toward you for a temporary high beam on, "flash to pass" scenario.

Green Indicator Lights

— Automatic High Beam Indicator Light — If Equipped

This indicator shows that the automatic high beam headlights are on.

— Speed Control Set Indicator Light — If Equipped

This light will turn on when the speed control is set to the desired speed. Refer to "Speed Control" in "Starting And Operating" for further information.

— Front Fog Indicator Light — If Equipped

This indicator light will illuminate when the front fog lights are on.

— Hazard Warning Lights

The hazard warning indicators light up when the vehicles Hazard Warning flasher switch has been pushed.

— Park/Headlight On Indicator Light

This indicator light will illuminate when the park lights or headlights are turned on.

— Stop/Start Active Indicator Light — If Equipped

This indicator light will illuminate when the Stop/Start function is in "Autostop" mode.

— Turn Signal Indicator Lights

When the left or right turn signal is activated, the turn signal indicator will flash independently and the corresponding exterior turn signal lamps will flash. Turn signals can be activated when the multifunction lever is moved down (left) or up (right).

Gray Indicator Lights

— Electronic Speed Control Ready/Canceled Indicator Light

This indicator light will illuminate when the speed control function is ready (but not set), or cancelled, by the driver. Refer to "Speed Control — If Equipped" in "Starting and Operating" for further information.

ONBOARD DIAGNOSTIC SYSTEM (OBD II)

Your vehicle is equipped with a sophisticated onboard diagnostic system called OBD II. This system monitors the performance of the emissions, engine, and automatic transmission control systems. When these systems are operating properly, your vehicle will provide excellent performance and fuel economy, as well as engine emissions well within current government regulations.

If any of these systems require service, the OBD II system will turn on the "Malfunction Indicator Light (MIL)." It will also store diagnostic codes and other information to assist your service technician in making repairs. Although your vehicle will usually be drivable and not need towing, see your authorized dealer for service as soon as possible.

CAUTION!

- **Prolonged driving with the MIL on could cause further damage to the emission control system. It could also affect fuel economy and driveability. The vehicle must be serviced before any emissions tests can be performed.**
- **If the MIL is flashing, while the engine is running, severe catalytic converter damage and power loss will soon occur. Immediate service is required.**

Onboard Diagnostic System (OBD II) Cybersecurity

Your vehicle is required to have an Onboard Diagnostic system (OBD II) and a connection port to allow access to information related to the performance of your emissions controls. Authorized service technicians may need to access this information to assist with the diagnosis and service of your vehicle and emissions system.

WARNING!

- **ONLY an authorized service technician should connect equipment to the OBD II connection port in order to read the VIN, diagnose, or service your vehicle.**
- **If unauthorized equipment is connected to the OBD II connection port, such as a driver-behavior tracking device, it may:**
  - **Be possible that vehicle systems, including safety related systems, could be impaired or a loss of vehicle control could occur that may result in an accident involving serious injury or death.**
  - **Access, or allow others to access, information stored in your vehicle systems, including personal information.**

For further information, refer to “Cybersecurity” in “Multimedia”.

EMISSIONS INSPECTION AND MAINTENANCE PROGRAMS

In some localities, it may be a legal requirement to pass an inspection of your vehicle’s emissions control system. Failure to pass could prevent vehicle registration.

For states that require an Inspection and Maintenance (I/M), this check verifies the “Malfunction Indicator Light (MIL)” is functioning and is not on when the engine is running, and that the OBD II system is ready for testing.

Normally, the OBD II system will be ready. The OBD II system may **not** be ready if your vehicle was recently serviced, recently had a dead battery or a battery replacement. If the OBD II system should be determined not ready for the I/M test, your vehicle may fail the test.

Your vehicle has a simple ignition actuated test, which you can use prior to going to the test station. To check if your vehicle's OBD II system is ready, you must do the following:

1. Cycle the ignition switch to the ON position, but do not crank or start the engine.

NOTE: If you crank or start the engine, you will have to start this test over.

2. As soon as you cycle the ignition switch to the ON position, you will see the "Malfunction Indicator Light (MIL)" symbol come on as part of a normal bulb check.
3. Approximately 15 seconds later, one of two things will happen:

- The MIL will flash for about ten seconds and then return to being fully illuminated until you turn OFF the ignition or start the engine. This means that your vehicle's OBD II system is **not ready** and you should **not** proceed to the I/M station.
- The MIL will not flash at all and will remain fully illuminated until you place the ignition in the off position or start the engine. This means that your vehicle's OBD II system is **ready** and you can proceed to the I/M station.

If your OBD II system is **not ready,** you should see an authorized dealer or repair facility. If your vehicle was recently serviced or had a battery failure or replacement, you may need to do nothing more than drive your vehicle as you normally would in order for your OBD II system to update. A recheck with the above test routine may then indicate that the system is **now ready**.

Regardless of whether your vehicle's OBD II system is ready or not, if the MIL is illuminated during normal vehicle operation you should have your vehicle serviced before going to the I/M station. The I/M station can fail your vehicle because the MIL is on with the engine running.

SAFETY

CONTENTS

■ SAFETY FEATURES 146

- □ Anti-Lock Brake System (ABS) 146
- □ Electronic Brake Control System 147

■ AUXILIARY DRIVING SYSTEMS 158

- □ Blind Spot Monitoring (BSM) — If Equipped . . .158
- □ Forward Collision Warning (FCW) With Mitigation Operation — If Equipped 166
- □ Tire Pressure Monitor System (TPMS) 173

■ OCCUPANT RESTRAINT SYSTEMS 181

- □ Occupant Restraint Systems 181
- □ Important Safety Precautions. 181
- □ Seat Belt Systems 182
- □ Supplemental Restraint Systems (SRS) 192
- □ Child Restraints 208
- □ Transporting Pets 224

■ SAFETY TIPS 224

- □ Transporting Passengers 224
- □ Exhaust Gas 225
- □ Safety Checks You Should Make Inside The Vehicle 226
- □ Periodic Safety Checks You Should Make Outside The Vehicle 228

SAFETY FEATURES

Anti-Lock Brake System (ABS)

The Anti-Lock Brake System (ABS) provides increased vehicle stability and brake performance under most braking conditions. The system automatically prevents wheel lock, and enhances vehicle control during braking.

The ABS performs a self-check cycle to ensure that the ABS is working properly each time the vehicle is started and driven. During this self-check, you may hear a slight clicking sound as well as some related motor noises.

ABS is activated during braking when the system detects one or more wheels begin to lock. Road conditions such as ice, snow, gravel, bumps, railroad tracks, loose debris, or panic stops may increase the likelihood of ABS activation(s).

You also may experience the following when ABS activates:

- The ABS motor noise (it may continue to run for a short time after the stop).
- The clicking sound of solenoid valves.
- Brake pedal pulsations.
- A slight drop of the brake pedal at the end of the stop.

These are all normal characteristics of ABS.

WARNING!

- **The ABS contains sophisticated electronic equipment that may be susceptible to interference caused by improperly installed or high output radio transmitting equipment. This interference can cause possible loss of anti-lock braking capability. Installation of such equipment should be performed by qualified professionals.**
- **Pumping of the Anti-Lock Brakes will diminish their effectiveness and may lead to a collision. Pumping makes the stopping distance longer. Just press firmly on your brake pedal when you need to slow down or stop.**
- **The ABS cannot prevent the natural laws of physics from acting on the vehicle, nor can it increase braking or steering efficiency beyond that afforded by the condition of the vehicle brakes and tires or the traction afforded.**
- **The ABS cannot prevent collisions, including those resulting from excessive speed in turns, following another vehicle too closely, or hydroplaning.**

(Continued)

WARNING! *(Continued)*

- **The capabilities of an ABS equipped vehicle must never be exploited in a reckless or dangerous manner that could jeopardize the user's safety or the safety of others.**

ABS is designed to function with the OEM tires. Modification may result in degraded ABS performance.

Anti-Lock Brake Warning Light

The yellow "Anti-Lock Brake Warning Light" will turn on when the ignition is turned to the ON/RUN mode and may stay on for as long as four seconds.

If the "Anti-Lock Brake Warning Light" remains on or comes on while driving, it indicates that the anti-lock portion of the brake system is not functioning and that service is required. However, the conventional brake system will continue to operate normally if the "Anti-Lock Brake Warning Light" is on.

If the "Anti-Lock Brake Warning Light" is on, the brake system should be serviced as soon as possible to restore the benefits of anti-lock brakes. If the "Anti-Lock Brake Warning Light" does not come on when the ignition is turned to the ON/RUN mode, have the light repaired as soon as possible.

Electronic Brake Control System

Your vehicle is equipped with an advanced Electronic Brake Control system (EBC). This system includes Anti-Lock Brake System (ABS), Brake Assist System (BAS), Hill Start Assist (HSA), Traction Control System (TCS), Electronic Stability Control (ESC), and Electronic Roll Mitigation (ERM). These systems work together to enhance both vehicle stability and control in various driving conditions.

Your vehicle may also be equipped with Trailer Sway Control (TSC), Dynamic Steering Torque (DST), and Hill Descent Control (HDC).

Brake Assist System (BAS)

The BAS is designed to optimize the vehicle's braking capability during emergency braking maneuvers. The system detects an emergency braking situation by sensing the rate and amount of brake application and then applies optimum pressure to the brakes. This can help reduce braking distances. The BAS complements the anti-lock brake system (ABS). Applying the brakes very quickly results in the best BAS assistance. To receive the benefit of the system, you must apply continuous braking pressure during the stopping sequence, (do not "pump" the brakes). Do not reduce brake pedal pressure unless braking is no longer desired. Once the brake pedal is released, the BAS is deactivated.

WARNING!

The Brake Assist System (BAS) cannot prevent the natural laws of physics from acting on the vehicle, nor can it increase the traction afforded by prevailing road conditions. BAS cannot prevent collisions, including those resulting from excessive speed in turns, driving on very slippery surfaces, or hydroplaning. The capabilities of a BAS-equipped vehicle must never be exploited in a reckless or dangerous manner, which could jeopardize the user's safety or the safety of others.

Hill Start Assist (HSA)

The HSA system is designed to help the driver accelerate the vehicle from a complete stop while on an incline. If the driver releases the brake while stopped on an incline, HSA will continue to hold the brake pressure for a short period. If the driver does not apply the throttle before this time expires, the system will release brake pressure and the vehicle will roll down the hill as normal. The system will release brake pressure in proportion to amount of throttle applied.

The following conditions must be met in order for HSA to activate:

- The vehicle must be stopped.
- The vehicle must be on a 5% (approximate) grade or greater hill.
- The gear selection must match vehicle uphill direction (i.e., vehicle facing uphill is in forward gear; vehicle backing uphill is in REVERSE gear).
- For vehicles equipped with an automatic transmission, the HSA will work in REVERSE gear and all forward gears. The system will not activate if the transmission is in PARK.

WARNING!

There may be situations where the Hill Start Assist (HSA) will not activate and slight rolling may occur, such as on minor hills or with a loaded vehicle, or while pulling a trailer. HSA is not a substitute for active driving involvement. It is always the driver's responsibility to be attentive to distance to other vehicles, people, and objects, and most importantly brake

(Continued)

WARNING! *(Continued)*

operation to ensure safe operation of the vehicle under all road conditions. Your complete attention is always required while driving to maintain safe control of your vehicle. Failure to follow these warnings can result in a collision or serious personal injury.

Disabling and Enabling HSA

This feature can be turned on or turned off. To change the current setting, proceed as follows:

- For vehicles equipped with the instrument cluster display, refer to "Instrument Cluster Display" in "Getting To Know Your Instrument Panel" for further information.

Trailer Sway Control (TSC) — If Equipped

TSC uses sensors in the vehicle to recognize an excessively swaying trailer and will take the appropriate actions to attempt to stop the sway. The system may reduce engine power and apply the brake of the appropriate wheel(s) to counteract the sway of the trailer. TSC will become active automatically once an excessively swaying trailer is recognized.

NOTE: TSC cannot stop all trailers from swaying. Always use caution when towing a trailer and follow the trailer tongue weight recommendations. Refer to "Trailer Towing" in "Starting And Operating" for further information. When TSC is functioning, the "ESC Activation/ Malfunction Indicator Light" will flash, the engine power may be reduced and you may feel the brakes being applied to individual wheels to attempt to stop the trailer from swaying. TSC is disabled when the ESC system is in the "Partial Off" mode.

WARNING!

If TSC activates while driving, slow the vehicle down, stop at the nearest safe location, and adjust the trailer load to eliminate trailer sway.

Electronic Stability Control (ESC)

This system enhances directional control and stability of the vehicle under various driving conditions. ESC corrects for oversteering or understeering of the vehicle by applying the brake of the appropriate wheel(s) to assist in counteracting the oversteer or understeer condition. Engine power may also be reduced to help the vehicle maintain the desired path.

ESC uses sensors in the vehicle to determine the vehicle path intended by the driver and compares it to the actual path of the vehicle. When the actual path does not match the intended path, ESC applies the brake of the appropriate wheel to assist in counteracting the oversteer or understeer condition.

- Oversteer — when the vehicle is turning more than appropriate for the steering wheel position.
- Understeer — when the vehicle is turning less than appropriate for the steering wheel position.

The "ESC Activation/Malfunction Indicator Light" located in the instrument cluster will start to flash as soon as the ESC system becomes active. The "ESC Activation/ Malfunction Indicator Light" also flashes when the TCS is active. If the "ESC Activation/Malfunction Indicator Light" begins to flash during acceleration, ease up on the accelerator and apply as little throttle as possible. Be sure to adapt your speed and driving to the prevailing road conditions.

WARNING!

- **Electronic Stability Control (ESC) cannot prevent the natural laws of physics from acting on the vehicle, nor can it increase the traction afforded by prevailing road conditions. ESC cannot prevent accidents, including those resulting from excessive speed in turns, driving on very slippery surfaces, or hydroplaning. ESC also cannot prevent accidents resulting from loss of vehicle control due to inappropriate driver input for the conditions. Only a safe, attentive, and skillful driver can prevent accidents. The capabilities of an ESC equipped vehicle must never be exploited in a reckless or dangerous manner which could jeopardize the user's safety or the safety of others.**

(Continued)

WARNING! *(Continued)*

- **Vehicle modifications, or failure to properly maintain your vehicle, may change the handling characteristics of your vehicle, and may negatively affect the performance of the ESC system. Changes to the steering system, suspension, braking system, tire type and size or wheel size may adversely affect ESC performance. Improperly inflated and unevenly worn tires may also degrade ESC performance. Any vehicle modification or poor vehicle maintenance that reduces the effectiveness of the ESC system can increase the risk of loss of vehicle control, vehicle rollover, personal injury and death.**

ESC Operation Modes

To disable ESC and other safety systems, follow the instruction below.

There are three modes of active safety systems present on the vehicle:

- ESC On
- Partial Off
- Full Off

ESC On – Two Wheel Drive Vehicles And Four Wheel Drive Vehicles In 2WD And 4WD High Range

This is the normal operating mode for ESC when operating a two-wheel drive vehicle. It is also the normal mode for operating a four-wheel drive vehicle in 2WD or 4WD HIGH range. The ESC system will be in “ESC On” mode whenever the vehicle is started or the power transfer unit (if equipped) is shifted out of 4WD LOW range. This mode should be used for most driving situations. ESC should only be turned to “Partial Off” or “Full Off” for specific reasons as noted. Refer to “Partial Off” and to “Full Off” for additional information.

NOTE: It is recommended to select the mode ″Partial Off″ or ″Full Off″ only for specific reasons.

Partial Off – Two Wheel Drive Vehicles And Four Wheel Drive Vehicles In 2WD And 4WD High Range

The "Partial Off" mode is intended for driving in deep snow, sand, or gravel. This mode raises the threshold for TCS and ESC activation, which allows for more wheel spin than what ESC normally allows.

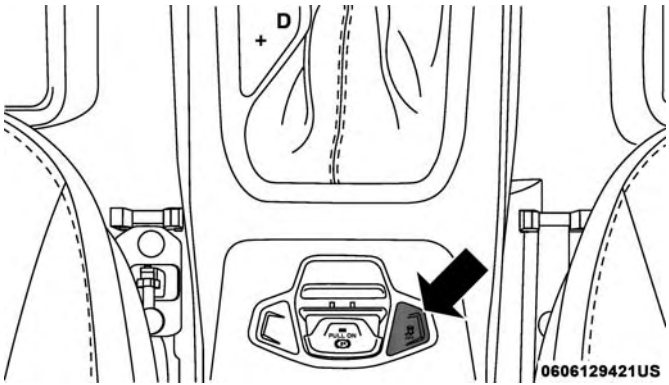

ESC OFF Button

To enter the "Partial Off" mode, momentarily push the "ESC Off" button and the ESC Off indicator light will illuminate. To turn the ESC on again, momentarily push the ESC OFF button and the ESC Off indicator light will turn off. This will restore the normal "ESC On" mode of operation.

NOTE: To improve the vehicle's traction when driving with snow chains, or when starting off in deep snow, sand, or gravel, it may be desirable to switch to the "Partial Off" mode by momentarily pushing the "ESC Off" button. Once the situation requiring "Partial Off" mode is overcome, turn ESC back on by momentarily pushing the "ESC Off" button. This may be done while the vehicle is in motion.

WARNING!

- **When in "Partial Off" mode, the TCS functionality of ESC, (except for the limited slip feature described in the TCS section), has been disabled and the "ESC Off Indicator Light" will be illuminated. When in "Partial Off" mode, the engine power reduction feature of TCS is disabled, and the enhanced vehicle stability offered by the ESC system is reduced.**
- **Trailer Sway control (TSC) is disabled when the ESC system is in the "Partial Off" mode.**

Full Off – Four-Wheel Drive Vehicles In 4WD High And 4WD Low Range

The "Full Off" mode is intended for off-highway and off-road use when ESC stability features could inhibit vehicle maneuverability due to trail conditions. The "ESC Off" button is located in the lower switch bank above the climate control panel. To enter "Full Off" mode, push and hold the "ESC Off" button for five seconds while the vehicle is stopped with the engine running. After five seconds, the ESC Off indicator light will illuminate and an "ESC Off" message will appear in the odometer.

In this mode, ESC and TCS are turned off (except for the "limited slip" feature described in the TCS section) until the vehicle reaches a speed of 40 mph (64 km/h). At speeds over 40 mph (64 km/h), the system automatically switches to "Partial Off" mode, described above. When the vehicle speed returns to less than 35 mph (56 km/h), the ESC system will return to "Full Off" mode. The ESC OFF indicator light is always illuminated when ESC is off. To turn ESC on again, momentarily push the "ESC Off" button. This will restore the normal "ESC On" mode of operation.

NOTE: With the ESC switched off, the enhanced vehicle stability offered by ESC is unavailable. In an emergency evasive maneuver, the ESC system will not engage to assist in maintaining stability. "Full Off" mode is only intended for off-highway or off-road use.

NOTE:

- "Full Off" is the only operating mode for ESC in 4WD LOW range. The ESC system will be in this mode whenever the vehicle is started in 4WD LOW range or the power transfer unit is shifted into 4WD LOW range.
- The "ESC OFF" message will display and a chime will sound when the gear selector is moved from any position to the PARK position and then moved out of the PARK position. This will occur even if the message was cleared previously.

Selec-Terrain — If Equipped

On models equipped with Selec-Terrain, the activation of some driving modes provide partial off or full off of some active safety systems in order to optimize performance in specific modes.

Partial or full off of the active safety systems will be indicated by a light in the instrument cluster.

In "SAND" and "MUD", the active safety systems are partially disabled and put in place to ensure maximum performance in the specific mode of operation. However, you can reactivate them completely at any time by pushing the ESC button.

NOTE: In 4WD LOW, the active safety systems are completely bypassed in order to ensure maximum off-road performance.

ESC Activation/Malfunction Indicator Light And ESC OFF Indicator Light

The "ESC Activation/Malfunction Indicator Light" in the instrument cluster will come on when the ignition switch is turned to the ON position. It should go out with the engine running. If the "ESC Activation/Malfunction Indicator Light" comes on continuously with the engine running, a malfunction has been detected in the ESC system. If this light remains on after several ignition cycles, and the vehicle has been driven several miles/kilometers at speeds greater than 30 mph (48 km/h), see an authorized dealer as soon as possible to have the problem diagnosed and corrected.

The "ESC Activation/Malfunction Indicator Light" (located in the instrument cluster) starts to flash as soon as the tires lose traction and the ESC system becomes active. The "ESC Activation/Malfunction Indicator Light" also flashes when Traction Control System is active. If the "ESC Activation/Malfunction Indicator Light" begins to flash during acceleration, ease up on the accelerator and apply as little throttle as possible. Be sure to adapt your speed and driving to the prevailing road conditions.

NOTE:

- The "ESC Activation/Malfunction Indicator Light" and the "ESC OFF Indicator Light" come on momentarily each time the ignition switch is turned ON.
- Each time the ignition is turned ON, the ESC system will be ON even if it was turned off previously.
- The ESC system will make buzzing or clicking sounds when it is active. This is normal; the sounds will stop when ESC becomes inactive following the maneuver that caused the ESC activation.

The "ESC OFF Indicator Light" indicates the Electronic Stability Control (ESC) is partially off or full off.

The ESC OFF switch is located in the center console.

Electronic Roll Mitigation (ERM)

This system anticipates the potential for wheel lift by monitoring the driver's steering wheel input and the speed of the vehicle. When ERM determines that the rate of change of the steering wheel angle and vehicle's speed are sufficient to potentially cause wheel lift, it then applies the appropriate brake and may also reduce engine power to lessen the chance that wheel lift will occur. ERM will only intervene during very severe or evasive driving maneuvers. ERM can only reduce the chance of wheel lift occurring during severe or evasive driving maneuvers. It cannot prevent wheel lift due to other factors, such as road conditions, leaving the roadway, or striking objects or other vehicles.

NOTE: ERM is disabled anytime the ESC is in "Full Off" mode. Refer to Electronic Stability Control (ESC) in this section for a complete explanation of the available ESC modes.

WARNING!

Many factors, such as vehicle loading, road conditions, and driving conditions, influence the chance that wheel lift or rollover may occur. Electronic Roll Mitigation (ERM) cannot prevent all wheel lift or rollovers, especially those that involve leaving the roadway or striking objects or other vehicles. The capabilities of an ERM-equipped vehicle must never be exploited in a reckless or dangerous manner, which could jeopardize the user's safety or the safety of others.

Traction Control System (TCS)

This system monitors the amount of wheel spin of each of the driven wheels. If wheel spin is detected, brake pressure is applied to the slipping wheel(s) and engine power is reduced to provide enhanced acceleration and stability. A feature of the TCS system, Brake Limited Differential (BLD), functions similar to a limited slip differential and controls the wheel spin across a driven axle. If one wheel on a driven axle is spinning faster than the other, the system will apply the brake of the spinning wheel. This will allow more engine torque to be applied to the wheel that is not spinning. This feature remains active even if TCS

and ESC are in the “Partial Off” mode or the “Full Off” mode. Refer to “Electronic Stability Control (ESC)” in this section for further information.

Dynamic Steering Torque (DST)

The DST function uses the integration of the ESC system with the electric power steering to increase the safety level of the whole car. In critical situations (understeering, oversteering, braking with different grip conditions), through the DST function the ESC system controls the steering to implement an additional torque contribution on the steering wheel, to suggest the most correct maneuver to the driver. The coordinated action of brakes and steering increases the safety and car control feeling.

NOTE: The DST is a driving aid system and does not replace the driver’s actions while driving the car.

Hill Descent Control (HDC) — If Equipped

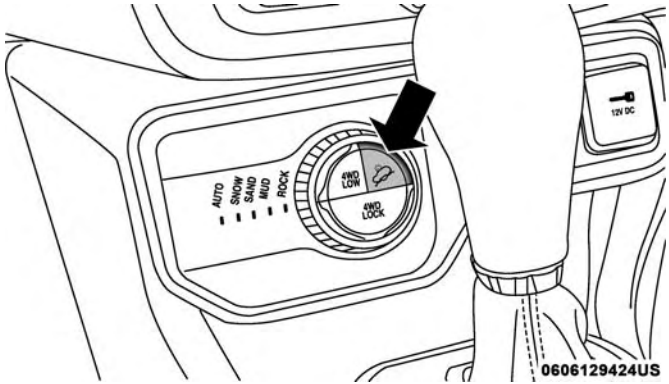

Hill Descent Control (Trailhawk)

HDC is intended for low speed off road driving while in 4WD Low Range. HDC maintains vehicle speed while descending hills during various driving situations. HDC controls vehicle speed by actively controlling the brakes.

HDC has three states:

1. Off (feature is not enabled and will not activate).
2. Enabled (feature is enabled and ready but activation conditions are not met, or driver is actively overriding with brake or throttle application).
3. Active (feature is enabled and actively controlling vehicle speed).

Enabling HDC

HDC is enabled by pushing the HDC switch, but the following conditions must also be met to enable HDC:

- Driveline is in 4WD Low Range.
- Vehicle speed is below 7.5 mph (12 km/h).
- Electric Park Brake (EPB) is released.
- Driver's door is closed.

Activating HDC

Once HDC is enabled, it will activate automatically if driven down a grade of sufficient magnitude (greater than approximately 8%). The set speed for HDC is selectable by the driver and can be adjusted using brake and throttle input.

Driver Override:

The driver may override HDC activation with throttle or brake application at anytime.

Deactivating HDC

HDC will be deactivated but remain available if any of the following conditions occur:

- Driver overrides HDC set speed with throttle or brake application.
- Vehicle speed exceeds 7.5 mph (12 km/h) but remains below 25 mph (40 km/h).
- Vehicle is on a downhill grade of insufficient magnitude (less than approximately 8%), is on level ground, or is on an uphill grade.
- Vehicle is shifted to PARK.

Disabling HDC

HDC will be deactivated and disabled if any of the following conditions occur:

- The driver pushes the HDC switch.
- The driveline is shifted out of 4WD Low Range.
- Driver's door opens.

- The vehicle is driven greater than 25 mph (40 km/h) (HDC exits immediately.)

Feedback To The Driver:

The instrument cluster has an HDC icon and the HDC switch has an LED which offer feedback to the driver about the state HDC is in.

- The cluster icon and switch lamp will illuminate and remain solid when HDC is enabled or activated. This is the normal operating condition for HDC.
- The switch lamp will flash for several seconds then extinguish when the driver pushes the HDC switch when enable conditions have not been met.

The Hill Descent Switch is located within the Selec-Terrain knob in the upper right position.

WARNING!

HDC is only intended to assist the driver in controlling vehicle speed when descending hills. The driver must remain attentive to the driving conditions and is responsible for maintaining a safe vehicle speed.

AUXILIARY DRIVING SYSTEMS

Blind Spot Monitoring (BSM) — If Equipped

The Blind Spot Monitoring (BSM) system uses two radar-based sensors, located inside the rear bumper fascia, to detect highway licensable vehicles (automobiles, trucks, motorcycles, etc.) that enter the blind spot zones from the rear/front/side of the vehicle.

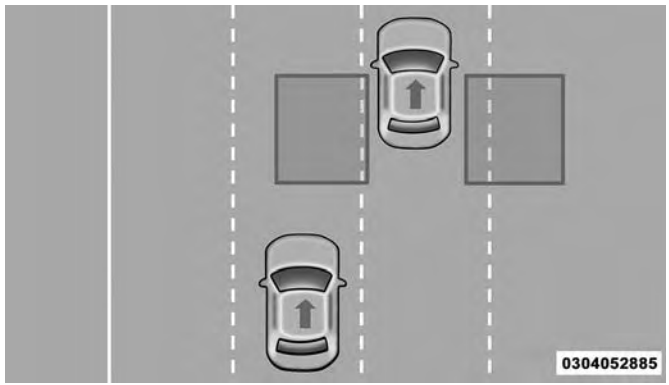

Rear Detection Zones

When the vehicle is started, the BSM warning light will momentarily illuminate in both outside rear view mirrors to let the driver know that the system is operational. The BSM system sensors operate when the vehicle is in any forward gear or REVERSE and enters stand-by mode when the vehicle is in PARK.

The BSM detection zone covers approximately one lane width on both sides of the vehicle, 10 ft (3 m). The zone length starts at the outside mirror and extends approximately 20 ft (6 m) beyond the rear bumper of the vehicle. The BSM system monitors the detection zones on both sides of the vehicle when the vehicle speed reaches approximately 6 mph (10 km/h) or higher and will alert the driver of vehicles in these areas.

NOTE:

- The BSM system does NOT alert the driver about rapidly approaching vehicles that are outside the detection zones.
- If a trailer is connected to the vehicle, it is necessary to deactivate BSM system manually by settings menu to avoid a misdetection. Refer to “Uconnect Settings” in “Multimedia” for further information.

The area on the rear fascia where the radar sensors are located must remain free of snow, ice, and dirt/road contamination so that the BSM system can function properly. Do not block the radar sensors located on the rear fascia with foreign objects (bumper stickers, bicycle racks, etc.).

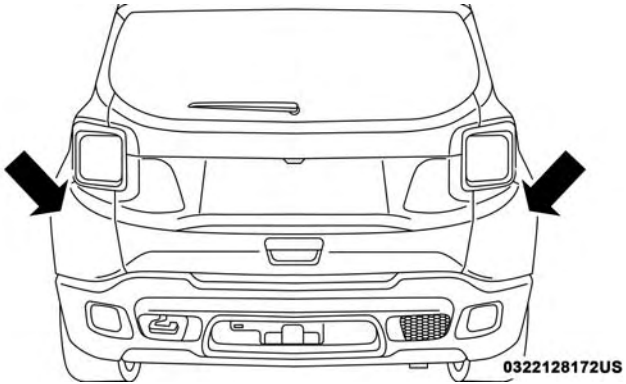

Rear Sensor Locations

The BSM system notifies the driver of objects in the detection zones by illuminating the BSM warning light located in the outside mirrors in addition to sounding an audible (chime) alert and reducing the radio volume. Refer to “Modes Of Operation” for further information.

BSM Warning Light

The BSM system monitors the detection zone from three different entry points (side, rear, front) while driving to see if an alert is necessary. The BSM system will issue an alert during these types of zone entries.

Entering From The Side

Vehicles that move into your adjacent lanes from either side of the vehicle.

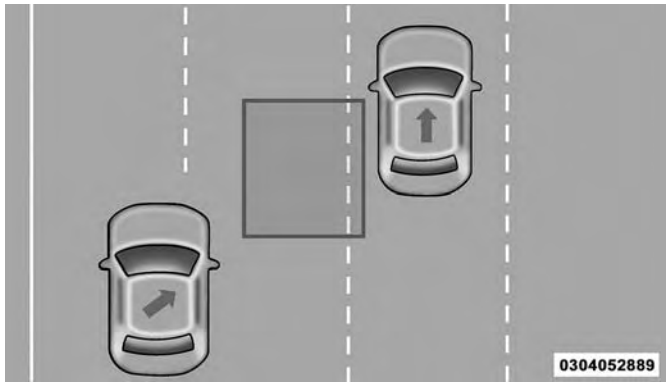

Side Monitoring

Entering From The Rear

Vehicles that come up from behind your vehicle on either side and enter the rear detection zone with a relative speed of less than 31 mph (50 km/h).

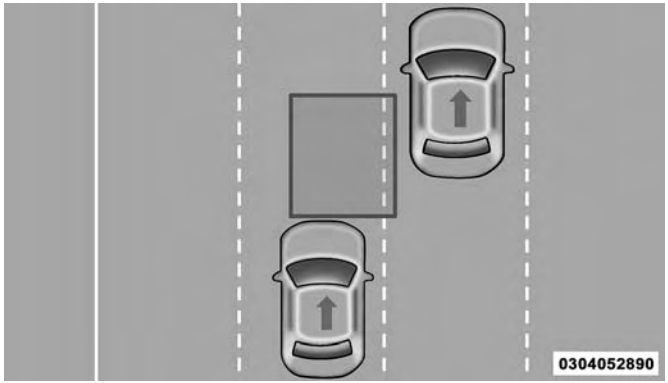

Rear Monitoring

Overtaking Traffic

If you pass another vehicle slowly with a relative speed less than 15 mph (25 km/h) and the vehicle remains in the blind spot for approximately 1.5 seconds, the warning light will be illuminated. If the difference in speed between the two vehicles is greater than 15 mph (25 km/h), the warning light will not illuminate.

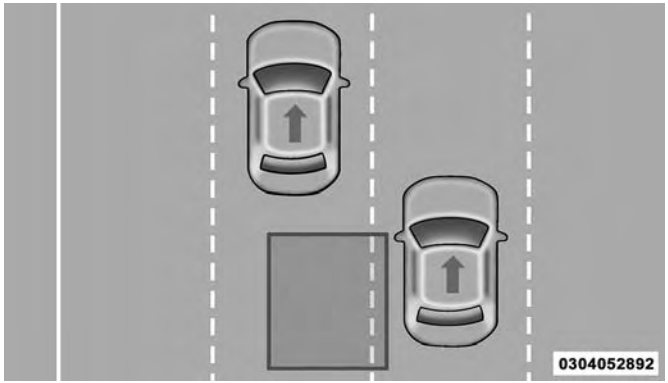

Overtaking/Approaching

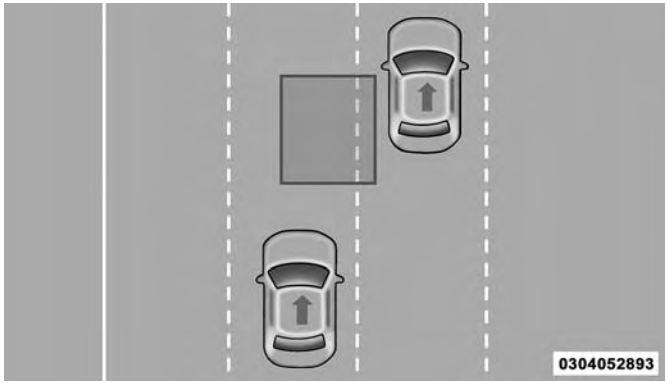

Overtaking/Passing

The BSM system is designed not to issue an alert on stationary objects such as guardrails, posts, walls, foliage, berms, etc. However, occasionally the system may alert on such objects. This is normal operation and your vehicle does not require service.

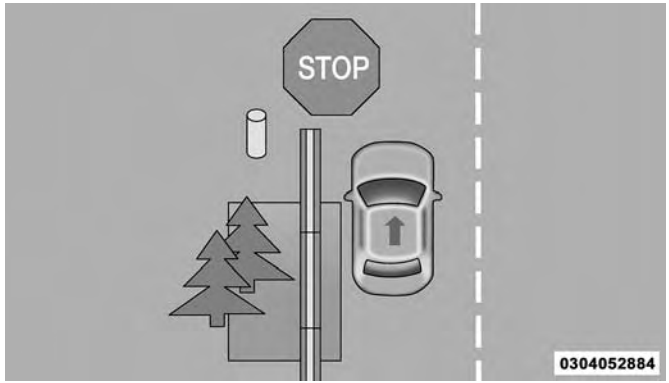

Stationary Objects

The BSM system will not alert you of objects that are traveling in the opposite direction of the vehicle in adjacent lanes.

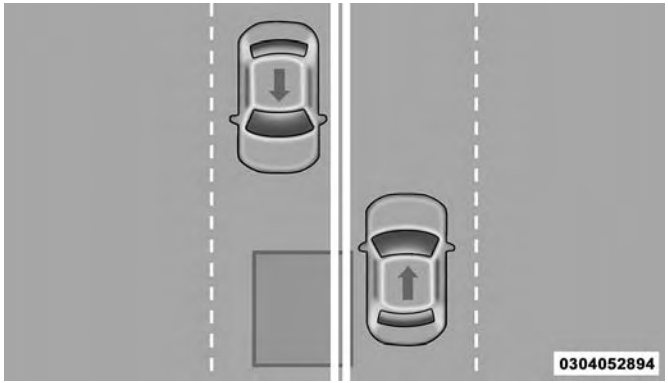

Opposing Traffic

WARNING!

The Blind Spot Monitoring system is only an aid to help detect objects in the blind spot zones. The BSM system is not designed to detect pedestrians, bicyclists, or animals. Even if your vehicle is equipped with the BSM system, always check your vehicle's mirrors, glance over your shoulder, and use your turn signal before changing lanes. Failure to do so can result in serious injury or death.

Rear Cross Path (RCP)

The Rear Cross Path (RCP) feature is intended to aid the driver when backing out of parking spaces where their vision of oncoming vehicles may be blocked. Proceed slowly and cautiously out of the parking space until the rear end of the vehicle is exposed. The RCP system will then have a clear view of the cross traffic and if an oncoming vehicle is detected, alert the driver.

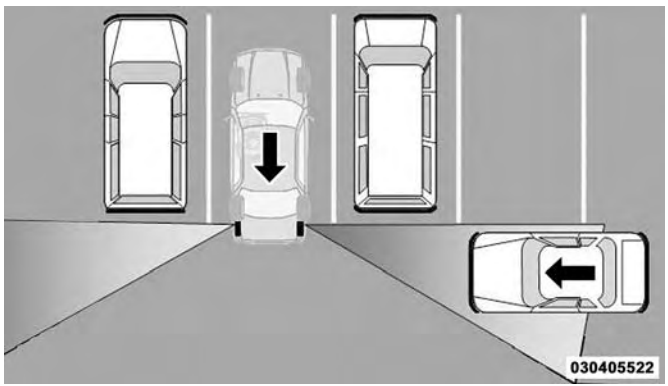

RCP Detection Zones

RCP monitors the rear detection zones on both sides of the vehicle, for objects that are moving toward the side of the vehicle with a minimum speed of approximately 1 mph (2 km/h), to objects moving a maximum of approximately 22 mph (35 km/h), such as in parking lot situations.

NOTE: In a parking lot situation, oncoming vehicles can be obscured by vehicles parked on either side. If the sensors are blocked by other structures or vehicles, the system will not be able to alert the driver.

When RCP is on and the vehicle is in REVERSE, the driver is alerted using both the visual and audible alarms, including reducing the radio volume.

WARNING!

Rear Cross Path Detection (RCP) is not a back up aid system. It is intended to be used to help a driver detect an oncoming vehicle in a parking lot situation. Drivers must be careful when backing up, even when using RCP. Always check carefully behind your vehicle, look behind you, and be sure to check for pedestrians, animals, other vehicles, obstructions, and blind spots before backing up. Failure to do so can result in serious injury or death.

Modes Of Operation

Three selectable modes of operation are available in the Uconnect System. Refer to “Uconnect Settings” in “Multimedia” for further information.

Blind Spot Alert Lights Only

When operating in Blind Spot Alert mode, the BSM system will provide a visual alert in the appropriate side view mirror based on a detected object. However, when the system is operating in Rear Cross Path (RCP) mode, the system will respond with both visual and audible alerts when a detected object is present. Whenever an audible alert is requested, the radio is muted.

Blind Spot Alert Lights/Chime

When operating in Blind Spot Alert Lights/Chime mode, the BSM system will provide a visual alert in the appropriate side view mirror based on a detected object. If the turn signal is then activated, and it corresponds to an alert present on that side of the vehicle, an audible chime will also be sounded. Whenever a turn signal and detected object are present on the same side at the same time, both the visual and audible alerts will be issued. In addition to the audible alert, the radio (if on) will also be muted.

NOTE: Whenever an audible alert is requested by the BSM system, the radio is also muted.

When the system is in RCP, the system will respond with both visual and audible alerts when a detected object is present. Whenever an audible alert is requested, the radio is also muted. Turn/hazard signal status is ignored; the RCP state always requests the chime.

Blind Spot Alert Off

When the BSM system is turned off, there will be a related message on instrument cluster display. If BSM system is off, this message will be visualized every time the vehicle is restarted.

NOTE: The BSM system will store the current operating mode when the vehicle is shut off. Each time the vehicle is started the previously stored mode will be recalled and used.

Blind Spot Monitoring Fault Warnings

Sensor Blinded

In the case of a sensor blinded:

- BSM Mirror Warning Lights are turned on continuously.
- A instrument cluster dedicated message will display.

NOTE: The rear bumper must be clean and free of any obstructing debris.

System Not Available

In the case of the system being temporary unavailable:

- BSM Mirror Warning Lights are turned on continuously.
- A instrument cluster dedicated message will display.

In the case of the system being completely unavailable:

- A chime will sound.
- A instrument cluster dedicated message will display.

NOTE: Vehicle must be taken to the nearest authorized dealer for service.

General Information

The following regulatory statement applies to all Radio Frequency (RF) devices equipped in this vehicle:

This device complies with Part 15 of the FCC Rules and with Industry Canada license-exempt RSS standard(s). Operation is subject to the following two conditions:

1. This device may not cause harmful interference.
2. This device must accept any interference received, including interference that may cause undesired operation.

NOTE: Changes or modifications not expressly approved by the party responsible for compliance could void the user's authority to operate the equipment.

Forward Collision Warning (FCW) With Mitigation Operation — If Equipped

The Forward Collision Warning (FCW) System with Mitigation provides the driver with audible warnings, visual warnings (within the instrument cluster display), and may apply a brake jerk to warn the driver when it detects a potential frontal collision. The warnings and limited braking are intended to provide the driver with enough time to react, avoid or mitigate the potential collision.

NOTE:

- FCW monitors the information from the forward looking sensors as well as the Electronic Brake Controller (EBC), to calculate the probability of a forward collision. When the system determines that a forward collision is probable, the driver will be provided with audible and visual warnings and may provide a brake jerk warning.
- If the driver does not take action based upon these progressive warnings, then the system will provide a limited level of active braking to help slow the vehicle and mitigate the potential forward collision. If the driver reacts to the warnings by braking and the system determines that the driver intends to avoid the collision by braking but has not applied sufficient brake force, the system will compensate and provide additional brake force as required.

Vehicles With A Manual Transmission: After the end of the intervention of automatic braking, the engine could stall, unless the driver can depress the clutch pedal.

Vehicles With Automatic Transmission: After the end of the intervention of automatic braking, the transmission may remain in last gear stored: therefore the vehicle could lurch forward, once the brakes release a few seconds later. If the Forward Collision Warning with Mitigation event stops the vehicle completely, the system will hold the vehicle at standstill for two seconds and then release the brakes.

If a Forward Collision Warning with Mitigation event begins at a speed below 26 mph (42 km/h), the system may provide the maximum braking possible to mitigate the potential forward collision. If the Forward Collision Warning with Mitigation event stops the vehicle completely, the system will hold the vehicle at standstill for two seconds and then release the brakes.

FCW Message

When the system determines a collision with the vehicle in front of you is no longer probable, the warning message will be deactivated.

NOTE:

- The minimum speed for FCW activation is 3 mph (5 km/h).
- The FCW alerts may be triggered on objects other than vehicles such as guard rails or sign posts based on the course prediction. This is expected and is a part of normal FCW activation and functionality.
- The FCW system is intended for on-road use only. If the vehicle is taken off-road, the FCW system should be deactivated to prevent unnecessary warnings to the surroundings.
- If the vehicle enters 4WD Low Range, the FCW system will be automatically deactivated.
- The active braking is disabled when a trailer is connected with a Mopar Trailer Towing system. If the vehicle is equipped with an aftermarket system, it is recommended that the Active Braking is turned off manually.

WARNING!

Forward Collision Warning (FCW) is not intended to avoid a collision on its own, nor can FCW detect every type of potential collision. The driver has the responsibility to avoid a collision by controlling the vehicle via braking and steering. Failure to follow this warning could lead to serious injury or death.

Turning FCW On Or Off

The Forward Collision menu setting is located in the Uconnect settings.

NOTE: The default status of FCW is "Warning + Active Braking," this allows the system to warn you of a possible collision with the vehicle in front of you and enable the active braking.

- Changing the FCW status to "Off" deactivates the system, so no warning or active braking will be available in case of a possible collision
- Changing the FCW status to "Only warning" prevents the system from providing limited active braking, or additional brake support if the driver is not braking adequately in the event of a potential frontal collision, but maintains the audible and visual warnings.

Changing the status of the system is only possible with the vehicle at a complete stop.

NOTE: The FCW system state is not kept in memory from one ignition position to the next. If the system is turned off, it will turn on when the vehicle is restarted.

Changing FCW Sensitivity

By changing the settings on the menu of the Uconnect system, you can change the sensitivity of the system by choosing one of the following three options: "Near", "Medium" or "Far". Refer to "Uconnect Settings" in "Multimedia" for further information.

The default option is "Medium". This setting provides that the system notify the driver of a possible accident with the vehicle ahead of it when the latter is at a standard distance, intermediate between the other two possible settings.

By setting the sensitivity of the system to "Far", the system will warn the driver of a possible accident with the vehicle in front when the latter is at a greater distance, giving you the chance to act on the brakes in a more limited and gradual. This setting gives the driver the maximum possible time of reaction to prevent a possible accident.

By changing the option to "Near", the system will warn the driver of a possible accident with the vehicle ahead of it when the latter is a reduced distance. This setting offers a reaction time to the driver lower than the settings "Medium" and "Far", in the case of a potential accident, while a more dynamic driving of the vehicle.

The setting of the sensitivity of the system is maintained in memory when the engine is switched off.

FCW Limited Warning

If the instrument cluster display reads "FCW Limited Functionality" or "FCW Limited Functionality Wipe Front Windshield" momentarily, there may be a condition that limits FCW functionality. Although the vehicle is still drivable under normal conditions, the active braking may not be fully available. Once the condition that limited the system performance is no longer present, the system will return to its full performance state. If the problem persists, see your authorized dealer.

Service FCW Warning

If the system turns off, and the instrument cluster display reads:

- FCW Unavailable Service Required

This indicates there is an internal system fault. Although the vehicle is still drivable under normal conditions, have the system checked by an authorized dealer.

"FCW Front Radar Sensor Temporarily Blocked" Warning

The "FCW Front Radar Sensor Temporarily Blocked" warning will display when conditions temporarily limit system performance. This most often occurs at times of poor visibility, such as in snow or heavy rain. The system may also become temporarily blinded due to obstructions, such as mud, dirt or ice. In these cases, the instrument cluster display will read "FCW Front Radar Sensor Temporarily Blocked" and the system will deactivate.

The "FCW Front Radar Sensor Temporarily Blocked" message can sometimes be displayed while driving in highly reflective areas (i.e. tunnels with reflective tiles, or ice and snow). The system will recover after the vehicle has left these areas. Under rare conditions, when the radar is not tracking any vehicles or objects in its path this warning may temporarily occur.

If weather conditions are not a factor, the driver should examine the sensor. It may require cleaning or removal of an obstruction. In absence of visible obstructions on the bumper, it could be necessary to wipe off the radar directly on the surface, after having the radar cover removed. It's recommended that your authorized dealer perform this operation.

NOTE:

- If the "FCW Front Radar Sensor Temporarily Blocked" message occurs frequently (e.g. more than once on every trip) without any snow, rain, mud, or other obstruction, have the radar sensor realigned at your authorized dealer.
- Installing a snow plow or front-end protector is not recommended. Doing so may block the sensor and inhibit FCW operation.
- Use only a soft cloth for cleaning. Do not use solvents or abrasive pastes.
- The radar is equipped with a defrost system, so in some climatic conditions it could reach high temperatures. Wait at least 30 seconds after the engine has been cycled OFF before touching the sensor.

Precautions While Driving With FCW

In certain driving conditions, such as:

- Driving in the vicinity of a curve
- Small vehicles and/or not aligned to the lane
- Lane changing of other vehicles
- Passing of vehicles in an oncoming intersection

The intervention of the system could be unexpected or delayed. The driver must therefore always pay particular attention, while maintaining control of the vehicle to drive in complete safety.

Driving In The Vicinity Of A Curve

Entering or exiting a large curve, the system could detect the presence of a vehicle that is in front of the vehicle, but that does not preside in the same lane. In cases such as this, the system might respond.

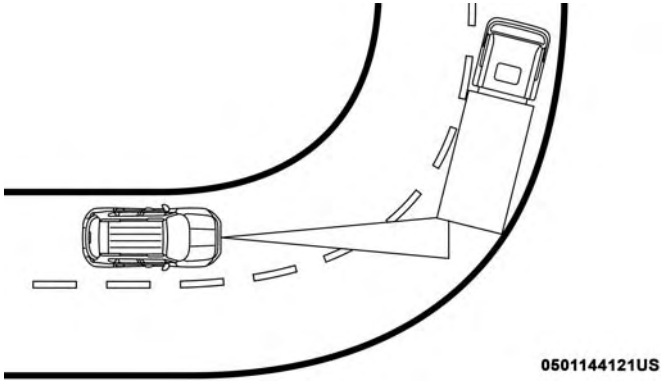

Driving In The Vicinity Of A Curve

Small Vehicles And/Or Not Aligned To The Lane

The system is not able to detect the presence of vehicles that are in front of the vehicle but placed outside the field of action of the radar sensor and could therefore not react in the presence of small vehicles such as bicycles or motorcycles.

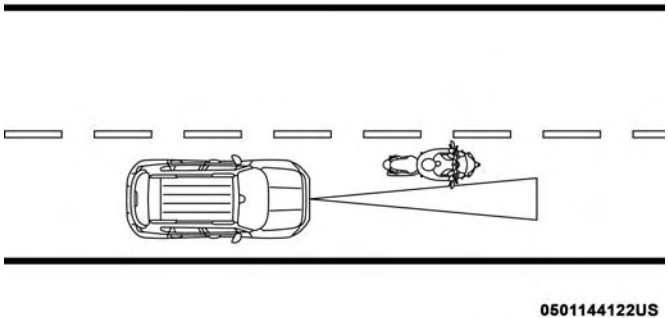

Small Vehicles And/Or Not Aligned To The Lane

Lane Changing Of Other Vehicles

Vehicles that suddenly change lane, while standing in the traffic lane of their vehicle and inside the field of action of the radar sensor may cause the intervention of the system.

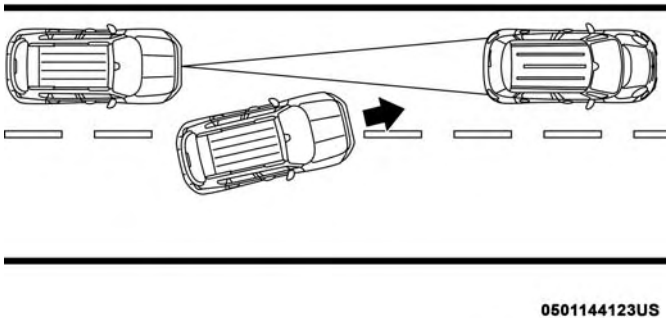

Lane Changing Of Other Vehicles

Passing Of Vehicles In An Oncoming Intersection

The system could temporarily react to a vehicle that crossed the range of the radar sensor, in an oncoming intersection.

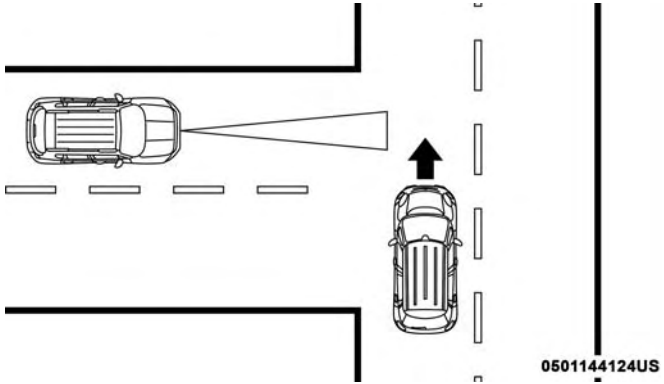

Passing Of Vehicles In An Oncoming Intersection

General Information

The following regulatory statement applies to all Radio Frequency (RF) devices equipped in this vehicle:

This device complies with Part 15 of the FCC Rules and with Industry Canada license-exempt RSS standard(s). Operation is subject to the following two conditions:

1. This device may not cause harmful interference.
2. This device must accept any interference received, including interference that may cause undesired operation.

NOTE: Changes or modifications not expressly approved by the party responsible for compliance could void the user's authority to operate the equipment.

Tire Pressure Monitor System (TPMS)

The Tire Pressure Monitor System (TPMS) will warn the driver of a low tire pressure based on the vehicle recommended cold placard pressure.

The tire pressure will vary with temperature by approximately 1 psi (7 kPa) for every 12°F (6.5°C). This means that when the outside temperature decreases, the tire pressure will decrease. Tire pressure should always be set based on cold inflation tire pressure. This is defined as the tire pressure after the vehicle has not been driven for at least three hours, or driven less than 1 mile (1.6 km) after a three hour period. The cold tire inflation pressure must not exceed the maximum inflation pressure molded into the tire sidewall. Refer to "Tires" in "Servicing And Maintenance" for information on how to properly inflate the vehicle's tires. The tire pressure will also increase as the vehicle is driven. This is normal and there should be no adjustment for this increased pressure.

The TPMS will warn the driver of a low tire pressure if the tire pressure falls below the low-pressure warning limit for any reason, including low temperature effects and natural pressure loss through the tire.

The TPMS will continue to warn the driver of low tire pressure as long as the condition exists, and will not turn off until the tire pressure is at or above the recommended cold placard pressure. Once the low tire pressure warning (Tire Pressure Monitoring Telltale Light) illuminates, you must increase the tire pressure to the recommended cold placard pressure in order for the "Tire Pressure Monitoring Telltale Light" to turn off.

NOTE: When filling warm tires, the tire pressure may need to be increased up to an additional 4 psi (28 kPa) above the recommended cold placard pressure in order to turn the Tire Pressure Monitoring Telltale Light off.

The system will automatically update and the "Tire Pressure Monitoring Telltale Light" will turn off once the system receives the updated tire pressures. The vehicle may need to be driven for up to 20 minutes above 15 mph (24 km/h) in order for the TPMS to receive this information.

For example, your vehicle may have a recommended cold (parked for more than three hours) placard pressure of 33 psi (227 kPa). If the ambient temperature is 68°F (20°C) and the measured tire pressure is 28 psi (193 kPa), a temperature drop to 20°F (-7°C) will decrease the tire pressure to approximately 24 psi (165 kPa). This tire pressure is low enough to turn ON the "Tire Pressure Monitoring Telltale Light." Driving the vehicle may cause the tire pressure to rise to approximately 28 psi (193 kPa), but the "Tire Pressure Monitoring Telltale Light" will still be on. In this situation, the "Tire Pressure Monitoring Telltale Light" will turn off only after the tires are inflated to the vehicle's recommended cold placard pressure value.

NOTE: When filling warm tires, the tire pressure may need to be increased up to an additional 4 psi (28 kPa) above the recommended cold placard pressure in order to turn the Tire Pressure Monitoring Telltale Light off.

CAUTION!

- **The TPMS has been optimized for the original equipment tires and wheels. TPMS pressures and warning have been established for the tire size equipped on your vehicle. Undesirable system operation or sensor damage may result when using replacement equipment that is not of the same size, type, and/or style. The TPM sensor is not designed for use on aftermarket wheels, and may contribute to a poor overall system performance. Customers are encouraged to use OEM wheels to assure TPMS feature operation.**
- **Using aftermarket tire sealants may cause the Tire Pressure Monitoring System (TPMS) sensor to become inoperable. After using an aftermarket tire sealant it is recommended that you take your vehicle to an authorized dealer to have your sensor function checked.**
- **After inspecting or adjusting the tire pressure always reinstall the valve stem cap. This will prevent moisture and dirt from entering the valve stem, which could damage the TPMS sensor.**

NOTE:

- The TPMS is not intended to replace normal tire care and maintenance, or to provide warning of a tire failure or condition.
- The TPMS should not be used as a tire pressure gauge while adjusting your tire pressure.
- Driving on a significantly underinflated tire causes the tire to overheat and can lead to tire failure. Underinflation also reduces fuel efficiency and tire tread life, and may affect the vehicle's handling and stopping ability.
- The TPMS is not a substitute for proper tire maintenance, and it is the driver's responsibility to maintain correct tire pressure using an accurate tire pressure gauge, even if underinflation has not reached the level to trigger illumination of the "Tire Pressure Monitoring Telltale Light".
- Seasonal temperature changes will affect TPMS information on your instrument cluster.

Base System

The Tire Pressure Monitor System (TPMS) uses wireless technology with wheel rim mounted electronic sensors to monitor tire pressure levels. Sensors, mounted to each wheel as part of the valve stem, transmit tire pressure readings to the receiver module.

NOTE: It is particularly important for you to check the tire pressure in all of the tires on your vehicle monthly and to maintain the proper pressure.

The TPMS consists of the following components:

- Receiver Module.
- Four Tire Pressure Monitoring Sensors.
- Tire Pressure Monitoring Telltale Light.

Tire Pressure Monitoring Low Pressure Warnings

The "Tire Pressure Monitoring Telltale Light" will illuminate in the instrument cluster, a "LOW TIRE PRESSURE" message will display in the instrument cluster, an "Inflate to XX" message will be displayed and a chime will sound when tire pressure is low in one or more of the four active road tires. Should this occur, you should stop as soon as possible, check the inflation pressure of each tire on your vehicle, and inflate each tire to the vehicle's recommended cold placard pressure value as shown in the "Inflate to XX" message. Once the system receives the updated tire pressures, the system will automatically update and the "Tire Pressure Monitoring Telltale Light" will turn off.

NOTE: When filling warm tires, the tire pressure may need to be increased up to an additional 4 psi (28 kPa) above the recommended cold placard pressure in order to turn the Tire Pressure Monitoring Telltale Light off. The vehicle may need to be driven for up to 20 minutes above 15 mph (24 km/h) in order for the TPMS to receive this information.

Service TPMS Warning

When a system fault is detected, the "Tire Pressure Monitoring Telltale Light" will flash on and off for 75 seconds and then remain on solid. The system fault will also sound a chime. If the ignition is cycled, this sequence will repeat, providing the system fault still exists. The "Tire Pressure Monitoring Telltale Light" will turn off when the fault condition no longer exists. A system fault can occur due to any of the following:

- Jamming due to electronic devices or driving next to facilities emitting the same radio frequencies as the TPMS sensors.
- Installing some form of aftermarket window tinting that affects radio wave signals.
- Lots of snow or ice around the wheels or wheel housings.
- Using tire chains on the vehicle.
- Using wheels/tires not equipped with TPMS sensors.

Vehicles With Compact Spare or non-Matching Full Size Spare

1. The compact spare tire or non-matching full size spare tire does not have a tire pressure monitoring sensor. Therefore, the TPMS will not monitor the pressure in the spare tire.
2. If you install the compact or non-matching full size spare tire in place of a road tire that has a pressure below the low-pressure warning limit, a chime will sound and the "TPMS Telltale Light" and "LOW TIRE PRESSURE" and "Inflate to XX" messages will turn on upon the next ignition cycle.
3. After driving the vehicle for up to 20 minutes above 15 mph (24 km/h), the "TPMS Telltale Light" will flash on and off for 75 seconds and then remain on solid.
4. For each subsequent ignition cycle, a chime will sound and the "TPMS Telltale Light" will flash on and off for 75 seconds and then remain on solid.

5. Once you repair or replace the original road tire and reinstall it on the vehicle in place of the compact spare or non-matching full size spare, the TPMS will update automatically and the "TPMS Telltale Light" will turn off, as long as no tire pressure is below the low-pressure warning limit in any of the four active road tires. The vehicle may need to be driven for up to 20 minutes above 15 mph (24 km/h) in order for the TPMS to receive this information.

Tire Pressure Monitor System Operation

The Tire Pressure Monitor System (TPMS) uses wireless technology with wheel rim mounted electronic sensors to monitor tire pressure levels. Sensors, mounted to each wheel as part of the valve stem, transmit tire pressure readings to the receiver module.

NOTE: It is particularly important for you to check the tire pressure in all of the tires on your vehicle monthly and to maintain the proper pressure.

The TPMS consists of the following components:

- Receiver Module.
- Four Tire Pressure Monitoring Sensors.
- Various Tire Pressure Monitoring System messages, which display in the instrument cluster.
- Tire Pressure Monitoring Telltale Light.

Tire Pressure Monitoring Low Pressure Warnings

The "Tire Pressure Monitoring Telltale Light" will illuminate in the instrument cluster and a chime will sound when tire pressure is low in one or more of the four active road tires. In addition, the instrument cluster will display a "Tire Low" message for a minimum of five seconds and a graphic showing the pressure values of each tire with the low tire pressure values in a different color.

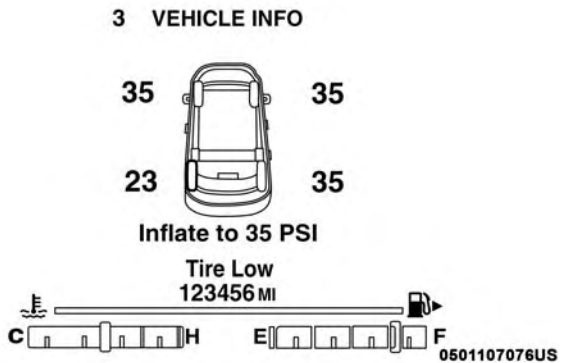

Tire Pressure Monitoring Low Pressure Warning

Should this occur, you should stop as soon as possible and inflate the tires with low pressure (those in a different color in the instrument cluster graphic) to the vehicle's recommended cold placard pressure value as shown in the "Inflate to XX" message. Once the system receives the updated tire pressures, the system will automatically update, the pressure values in the graphic display in the instrument cluster will return to their original color, and the "Tire Pressure Monitoring Telltale Light" will turn off.

NOTE: When filling warm tires, the tire pressure may need to be increased up to an additional 4 psi (28 kPa) above the recommended cold placard pressure in order to turn the Tire Pressure Monitoring Telltale Light off.
The vehicle may need to be driven for up to 20 minutes above 15 mph (24 km/h) in order for the TPMS to receive this information.

Service TPMS Warning

When a system fault is detected, the "Tire Pressure Monitoring Telltale Light" will flash on and off for 75 seconds and then remain on solid. The system fault will also sound a chime. In addition, the instrument cluster will display a "SERVICE TPM SYSTEM" message for a minimum of five seconds and then display dashes (- -) in place of the pressure value to indicate which sensor is not being received.

If the ignition key is cycled, this sequence will repeat, providing the system fault still exists. If the system fault no longer exists, the "Tire Pressure Monitoring Telltale Light" will no longer flash, and the "SERVICE TPM SYSTEM" message will no longer display, and a pressure value will display in place of the dashes. A system fault can occur due to any of the following:

- Jamming due to electronic devices or driving next to facilities emitting the same radio frequencies as the TPMS sensors.
- Installing some form of aftermarket window tinting that affects radio wave signals.
- Lots of snow or ice around the wheels or wheel housings.
- Using tire chains on the vehicle.
- Using wheels/tires not equipped with TPMS sensors.

Vehicles With Matching Full-Size Spare

1. The matching full size spare wheel and tire assembly has a tire pressure monitoring sensor that can be monitored by the TPMS.
2. If you install the full size spare in place of a road tire that has a pressure below the low-pressure warning limit, a chime will sound and the "TPMS Telltale Light" will turn on upon the next ignition key cycle. In addition, the instrument cluster will display a Tire Low message, an "Inflate to XX" message and a graphic showing the low tire pressure value in a different color.
3. After driving the vehicle for up to 20 minutes above 15 mph (24 km/h) the "TPMS Telltale Light" will turn OFF, as long as no tire pressure is below the low-pressure warning limit in any of the four active road tires.
4. The instrument cluster will display a graphic showing the tire pressure value in the same color as the other pressure values in place of the different color low tire pressure value. The instrument cluster will also display a dedicated message to remind you to service the flat tire.

Vehicles With Compact Spare or Non-Matching Full Size Spare

1. The compact spare tire or non-matching full size does not have a tire pressure monitoring sensor. Therefore, the TPMS will not monitor the pressure in the compact spare tire.
2. If you install the compact or non-matching full size spare tire in place of a road tire that has a pressure below the low-pressure warning limit, upon the next ignition key cycle, the "TPMS Telltale Light" will remain on and a chime will sound. In addition, the graphic in the instrument cluster will still display a different color pressure value and an "Inflate to XX" message.
3. After driving the vehicle for up to 20 minutes above 15 mph (24 km/h), the "TPMS Telltale Light" will flash on and off for 75 seconds and then remain on solid. In addition, the instrument cluster will display a "SERVICE TPM SYSTEM" message for five seconds and then display dashes (- -) in place of the pressure value.
4. For each subsequent ignition key cycle, a chime will sound, the "TPMS Telltale Light" will flash on and off for 75 seconds and then remain on solid, and the instrument cluster will display a "SERVICE TPM SYSTEM" message for five seconds and then display dashes (- -) in place of the pressure value.

5. Once you repair or replace the original road tire and reinstall it on the vehicle in place of the compact spare or non-matching full size, the TPMS will update automatically. In addition, the "TPMS Telltale Light" will turn off and the graphic in the instrument cluster will display a new pressure value instead of dashes (- -), as long as no tire pressure is below the low-pressure warning limit in any of the four active road tires. The vehicle may need to be driven for up to 20 minutes above 15 mph (24 km/h) in order for the TPMS to receive this information.

TPMS Deactivation — If Equipped

The TPMS can be deactivated if replacing all four wheel and tire assemblies (road tires) with wheel and tire assemblies that do not have TPMS Sensors, such as when installing Winter wheel and tire assemblies on your vehicle. To deactivate the TPMS, first, replace all four wheel and tire assemblies (road tires) with tires not equipped with Tire Pressure Monitoring (TPM) Sensors. Then, drive the vehicle for 20 minutes above 15 mph (24 km/h). The TPMS will chime, the "TPM Telltale Light" will flash on and off for 75 seconds and then remain on and the instrument cluster will display the "SERVICE TPM SYSTEM" message and then display dashes (--) in place of the pressure values. Beginning with the next ignition switch cycle, the TPMS will no longer chime or flash the TPM telltale and display the "SERVICE TPM SYSTEM" message in the instrument cluster display but dashes (--) will remain in place of the pressure values.

To reactivate the TPMS, replace all four wheel and tire assemblies (road tires) with tires equipped with TPM sensors. Then, drive the vehicle for up to 20 minutes above 15 mph (24 km/h). The TPMS will chime, the "TPM Telltale Light" will flash on and off for 75 seconds and then turn off, and the instrument cluster will display the "SERVICE TPM SYSTEM" message. The instrument cluster will also display pressure values in place of the dashes. On the next ignition switch cycle the "SERVICE TPM SYSTEM" message will no longer be displayed as long as no system fault exists.

General Information

The following regulatory statement applies to all radio frequency (RF) devices equipped in this vehicle:

This device complies with Part 15 of the FCC Rules and with Industry Canada license-exempt RSS standard(s). Operation is subject to the following two conditions:

(1) This device may not cause harmful interference, and

(2) This device must accept any interference received, including interference that may cause undesired operation.

NOTE: Changes or modifications not expressly approved by the party responsible for compliance could void the user's authority to operate the equipment.

OCCUPANT RESTRAINT SYSTEMS

Some of the most important safety features in your vehicle are the restraint systems:

Occupant Restraint Systems

- Seat Belt Systems
- Supplemental Restraint Systems (SRS) Air Bags
- Child Restraints

Some of the safety features described in this section may be standard equipment on some models, or may be optional equipment on others. If you are not sure, ask an authorized dealer.

Important Safety Precautions

Please pay close attention to the information in this section. It tells you how to use your restraint system properly, to keep you and your passengers as safe as possible.

Here are some simple steps you can take to minimize the risk of harm from a deploying air bag:

1. Children 12 years old and under should always ride buckled up in the rear seat of a vehicle with a rear seat.
2. A child who is not big enough to wear the vehicle seat belt properly (Refer to "Child Restraints" in this section for further information) must be secured in the appropriate child restraint or belt-positioning booster seat in a rear seating position.
3. If a child from 2 to 12 years old (not in a rear-facing child restraint) must ride in the front passenger seat, move the seat as far back as possible and use the proper child restraint (Refer to "Child Restraints" in this section for further information).
4. Never allow children to slide the shoulder belt behind them or under their arm.
5. You should read the instructions provided with your child restraint to make sure that you are using it properly.
6. All occupants should always wear their lap and shoulder belts properly.

7. The driver and front passenger seats should be moved back as far as practical to allow the front air bags room to inflate.
8. Do not lean against the door or window. If your vehicle has side air bags, and deployment occurs, the side air bags will inflate forcefully into the space between occupants and the door and occupants could be injured.
9. If the air bag system in this vehicle needs to be modified to accommodate a disabled person, refer to "Customer Assistance" for customer service contact information.

WARNING!

- **Never place a rear-facing child restraint in front of an air bag. A deploying passenger front air bag can cause death or serious injury to a child 12 years or younger, including a child in a rear-facing child restraint.**
- **Never install a rear-facing child restraint in the front seat of a vehicle. Only use a rear-facing child restraint in the rear seat. If the vehicle does not have a rear seat, do not transport a rear-facing child restraint in that vehicle.**

Seat Belt Systems

Buckle up even though you are an excellent driver, even on short trips. Someone on the road may be a poor driver and could cause a collision that includes you. This can happen far away from home or on your own street.

Research has shown that seat belts save lives, and they can reduce the seriousness of injuries in a collision. Some of the worst injuries happen when people are thrown from the vehicle. Seat belts reduce the possibility of ejection and the risk of injury caused by striking the inside of the vehicle. Everyone in a motor vehicle should be belted at all times.

Enhanced Seat Belt Use Reminder System (BeltAlert)

Front And Rear Seat BeltAlert (If Equipped)

Front Seat BeltAlert

BeltAlert is a feature intended to remind the driver and outboard front seat passenger to buckle their seat belts. The BeltAlert feature is active whenever the ignition switch is in the START or ON/RUN position.

Initial Indication

If the driver is unbuckled when the ignition switch is first in the START or ON/RUN position a chime will signal for a few seconds. If the driver or outboard front seat passenger is unbuckled when the ignition switch is first in the START or ON/RUN position the respective Seat Belt Reminder Light will turn solid red and remain red until the seat belt is buckled. The respective Seat Belt Reminder Light will turn solid green once the seat belt is buckled. After the driver and outboard front seat passenger have buckled their seat belts all Seat Belt Reminder Lights will turn off. The outboard front passenger seat BeltAlert is not active when the outboard front passenger seat is unoccupied.

BeltAlert Warning Sequence

The BeltAlert warning sequence is activated when the vehicle is moving above a specified vehicle speed range and the driver or outboard front seat passenger is unbuckled (the outboard front passenger seat BeltAlert is not active when the outboard front passenger seat is unoccupied). The BeltAlert warning sequence starts by blinking the respective Seat Belt Reminder Light and sounding an intermittent chime. Once the BeltAlert warning sequence has completed, the Seat Belt Reminder Light will remain solid red until the driver and outboard front seat passenger are buckled. The BeltAlert warning sequence may repeat based on vehicle speed until the driver and occupied outboard front seat passenger seat belts are buckled. The driver should instruct all occupants to buckle their seat belts.

Change Of Status

If the driver or outboard front seat passenger unbuckles their seat belt while the vehicle is traveling, the BeltAlert warning sequence will begin until the seat belts are buckled again.

The outboard front passenger seat BeltAlert is not active when the outboard front passenger seat is unoccupied. BeltAlert may be triggered when an animal or other items are placed on the outboard front passenger seat or when the seat is folded flat (if equipped). It is recommended that pets be restrained in the rear seat (if equipped) in pet harnesses or pet carriers that are secured by seat belts, and cargo is properly stowed.

Rear Seat BeltAlert

Rear Seat BeltAlert shows the driver whether the seat belts in the rear seat are buckled or unbuckled. When the ignition switch is in the START or ON/RUN position, a Seat Belt Reminder Light turns on for each rear seat position. If a seat belt is buckled, the Seat Belt Reminder

Light for that position will illuminate solid green for a few seconds, and then turn off. If a seat belt is unbuckled, the Seat Belt Reminder Light will illuminate red for a few seconds, and then turn off. If the vehicle is moving above a specified vehicle speed range and a rear passenger unbuckles a seat belt that was buckled at the start of the trip, an intermittent chime will sound, and the Seat Belt Reminder Light for that position will change from solid green to blinking red. This will alert the driver to stop the vehicle until the rear passenger buckles the seat belt again. When the rear passenger buckles the seat belt, the Seat Belt Reminder Light will change to solid green for a few seconds, before turning off.

BeltAlert can be activated or deactivated by an authorized dealer. FCA US LLC does not recommend deactivating BeltAlert.

NOTE: If BeltAlert has been deactivated, the Seat Belt Reminder Light will turn on and remain on until the driver and outboard front seat passenger seat belts are buckled.

Lap/Shoulder Belts

All seating positions in your vehicle are equipped with lap/shoulder belts.

The seat belt webbing retractor will lock only during very sudden stops or collisions. This feature allows the shoulder part of the seat belt to move freely with you under normal conditions. However, in a collision the seat belt will lock and reduce your risk of striking the inside of the vehicle or being thrown out of the vehicle.

WARNING!

- **Relying on the air bags alone could lead to more severe injuries in a collision. The air bags work with your seat belt to restrain you properly. In some collisions, the air bags won't deploy at all. Always wear your seat belt even though you have air bags.**
- **In a collision, you and your passengers can suffer much greater injuries if you are not properly buckled up. You can strike the interior of your vehicle or other passengers, or you can be thrown out of the vehicle. Always be sure you and others in your vehicle are buckled up properly.**
- **It is dangerous to ride in a cargo area, inside or outside of a vehicle. In a collision, people riding in these areas are more likely to be seriously injured or killed.**

(Continued)

WARNING! *(Continued)*

- Do not allow people to ride in any area of your vehicle that is not equipped with seats and seat belts.
- Be sure everyone in your vehicle is in a seat and using a seat belt properly. Occupants, including the driver, should always wear their seat belts whether or not an air bag is also provided at their seating position to minimize the risk of severe injury or death in the event of a crash.
- Wearing your seat belt incorrectly could make your injuries in a collision much worse. You might suffer internal injuries, or you could even slide out of the seat belt. Follow these instructions to wear your seat belt safely and to keep your passengers safe, too.
- Two people should never be belted into a single seat belt. People belted together can crash into one another in a collision, hurting one another badly. Never use a lap/shoulder belt or a lap belt for more than one person, no matter what their size.

WARNING!

- A lap belt worn too high can increase the risk of injury in a collision. The seat belt forces won't be at the strong hip and pelvic bones, but across your abdomen. Always wear the lap part of your seat belt as low as possible and keep it snug.
- A twisted seat belt may not protect you properly. In a collision, it could even cut into you. Be sure the seat belt is flat against your body, without twists. If you can't straighten a seat belt in your vehicle, take it to an authorized dealer immediately and have it fixed.
- A seat belt that is buckled into the wrong buckle will not protect you properly. The lap portion could ride too high on your body, possibly causing internal injuries. Always buckle your seat belt into the buckle nearest you.
- A seat belt that is too loose will not protect you properly. In a sudden stop, you could move too far forward, increasing the possibility of injury. Wear your seat belt snugly.

(Continued)

WARNING! *(Continued)*

- **A seat belt that is worn under your arm is dangerous. Your body could strike the inside surfaces of the vehicle in a collision, increasing head and neck injury. A seat belt worn under the arm can cause internal injuries. Ribs aren't as strong as shoulder bones. Wear the seat belt over your shoulder so that your strongest bones will take the force in a collision.**
- **A shoulder belt placed behind you will not protect you from injury during a collision. You are more likely to hit your head in a collision if you do not wear your shoulder belt. The lap and shoulder belt are meant to be used together.**
- **A frayed or torn seat belt could rip apart in a collision and leave you with no protection. Inspect the seat belt system periodically, checking for cuts, frays, or loose parts. Damaged parts must be replaced immediately. Do not disassemble or modify the seat belt system. Seat belt assemblies must be replaced after a collision.**

Lap/Shoulder Belt Operating Instructions

1. Enter the vehicle and close the door. Sit back and adjust the seat.
2. The seat belt latch plate is above the back of the front seat, and next to your arm in the rear seat (for vehicles equipped with a rear seat). Grasp the latch plate and pull out the seat belt. Slide the latch plate up the webbing as far as necessary to allow the seat belt to go around your lap.

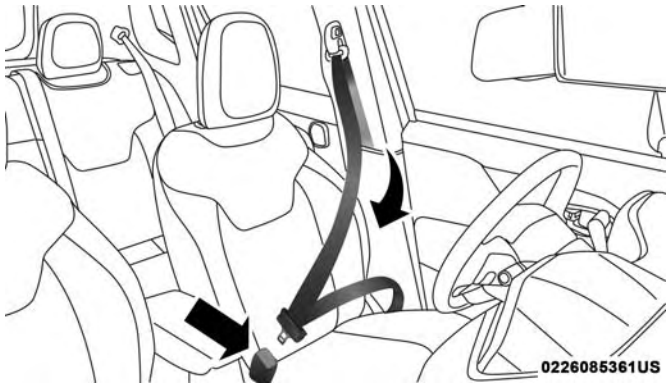

Pulling Out The Latch Plate

3. When the seat belt is long enough to fit, insert the latch plate into the buckle until you hear a “click.”

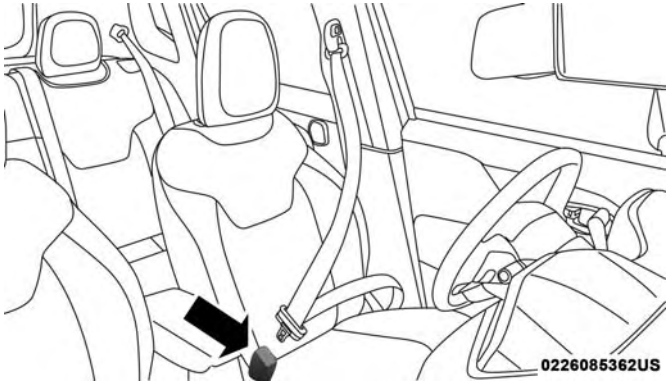

Inserting Latch Plate Into Buckle

4. Position the lap belt so that it is snug and lies low across your hips, below your abdomen. To remove slack in the lap belt portion, pull up on the shoulder belt. To loosen the lap belt if it is too tight, tilt the latch plate and pull on the lap belt. A snug seat belt reduces the risk of sliding under the seat belt in a collision.

Positioning The Lap Belt

5. Position the shoulder belt across the shoulder and chest with minimal, if any slack so that it is comfortable and not resting on your neck. The retractor will withdraw any slack in the shoulder belt.

6. To release the seat belt, push the red button on the buckle. The seat belt will automatically retract to its stowed position. If necessary, slide the latch plate down the webbing to allow the seat belt to retract fully.

Lap/Shoulder Belt Untwisting Procedure

Use the following procedure to untwist a twisted lap/shoulder belt.

1. Position the latch plate as close as possible to the anchor point.
2. At about 6 to 12 inches (15 to 30 cm) above the latch plate, grasp and twist the seat belt webbing 180 degrees to create a fold that begins immediately above the latch plate.
3. Slide the latch plate upward over the folded webbing. The folded webbing must enter the slot at the top of the latch plate.
4. Continue to slide the latch plate up until it clears the folded webbing and the seat belt is no longer twisted.

Adjustable Upper Shoulder Belt Anchorage

In the driver and outboard front passenger seats, the top of the shoulder belt can be adjusted upward or downward to position the seat belt away from your neck. Push or squeeze the anchorage button to release the anchorage, and move it up or down to the position that serves you best.

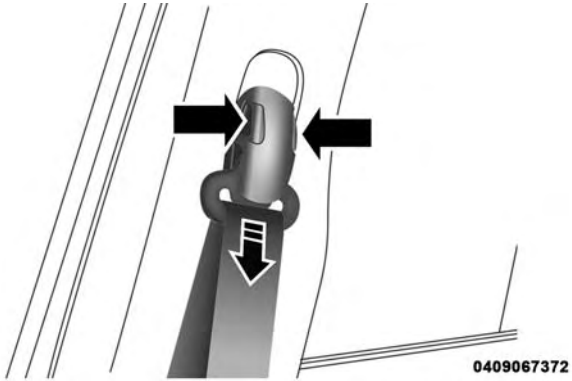

Adjustable Upper Anchorage

As a guide, if you are shorter than average, you will prefer the shoulder belt anchorage in a lower position, and if you are taller than average, you will prefer the shoulder belt anchorage in a higher position. After you release the anchorage button, try to move it up or down to make sure that it is locked in position.

NOTE: The adjustable upper shoulder belt anchorage is equipped with an Easy Up feature. This feature allows the shoulder belt anchorage to be adjusted in the upward position without pushing or squeezing the release button. To verify the shoulder belt anchorage is latched, pull downward on the shoulder belt anchorage until it is locked into position.

WARNING!

- **Wearing your seat belt incorrectly could make your injuries in a collision much worse. You might suffer internal injuries, or you could even slide out of the seat belt. Follow these instructions to wear your seat belt safely and to keep your passengers safe, too.**
- **Position the shoulder belt across the shoulder and chest with minimal, if any slack so that it is comfortable and not resting on your neck. The retractor will withdraw any slack in the shoulder belt.**
- **Misadjustment of the seat belt could reduce the effectiveness of the safety belt in a crash.**
- **Always make all seat belt height adjustments when the vehicle is stationary.**

Seat Belts And Pregnant Women

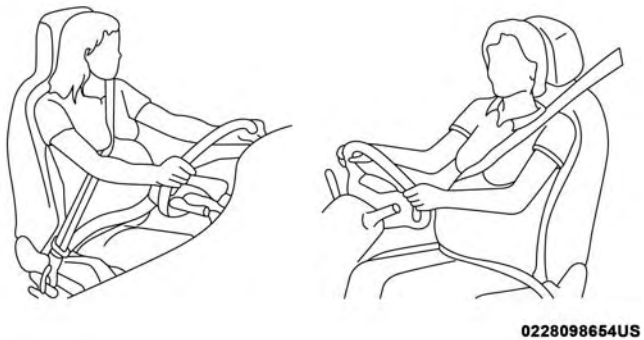

Pregnant Women And Seat Belts

Seat belts must be worn by all occupants including pregnant women: the risk of injury in the event of an accident is reduced for the mother and the unborn child if they are wearing a seat belt.

Position the lap belt snug and low below the abdomen and across the strong bones of the hips. Place the shoulder belt across the chest and away from the neck. Never place the shoulder belt behind the back or under the arm.

Seat Belt Pretensioner

The front outboard seat belt system is equipped with pretensioning devices that are designed to remove slack from the seat belt in the event of a collision. These devices may improve the performance of the seat belt by removing slack from the seat belt early in a collision. Pretensioners work for all size occupants, including those in child restraints.

NOTE: These devices are not a substitute for proper seat belt placement by the occupant. The seat belt still must be worn snugly and positioned properly.

The pretensioners are triggered by the Occupant Restraint Controller (ORC). Like the air bags, the pretensioners are single use items. A deployed pretensioner or a deployed air bag must be replaced immediately.

Energy Management Feature

The front outboard seat belt system is equipped with an Energy Management feature that may help further reduce the risk of injury in the event of a collision. The seat belt system has a retractor assembly that is designed to release webbing in a controlled manner.

Switchable Automatic Locking Retractor (ALR)

The seat belts in the passenger seating positions are equipped with a Switchable Automatic Locking Retractor (ALR) which is used to secure a child restraint system. For additional information, refer to "Installing Child Restraints Using The Vehicle Seat Belt" under the "Child Restraints" section of this manual. The figure below illustrates the locking feature for each seating position.

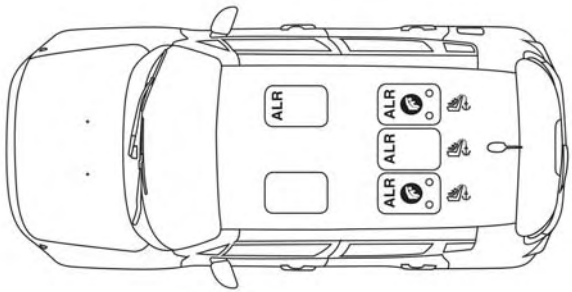

ALR — Switchable Automatic Locking Retractor

If the passenger seating position is equipped with an ALR and is being used for normal usage, only pull the seat belt webbing out far enough to comfortably wrap around the occupant's mid-section so as to not activate the ALR. If the ALR is activated, you will hear a clicking sound as the seat belt retracts. Allow the webbing to retract completely in this case and then carefully pull out only the amount of webbing necessary to comfortably wrap around the occupant's mid-section. Slide the latch plate into the buckle until you hear a "click."

In Automatic Locking Mode, the shoulder belt is automatically pre-locked. The seat belt will still retract to remove any slack in the shoulder belt. Use the Automatic Locking Mode anytime a child restraint is installed in a seating position that has a seat belt with this feature. Children 12 years old and under should always be properly restrained in the rear seat of a vehicle with a rear seat.

WARNING!

- **Never place a rear-facing child restraint in front of an air bag. A deploying passenger front air bag can cause death or serious injury to a child 12 years or younger, including a child in a rear-facing child restraint.**
- **Never install a rear-facing child restraint in the front seat of a vehicle. Only use a rear-facing child restraint in the rear seat. If the vehicle does not have a rear seat, do not transport a rear-facing child restraint in that vehicle.**

How To Engage The Automatic Locking Mode

1. Buckle the combination lap and shoulder belt.
2. Grasp the shoulder portion and pull downward until the entire seat belt is extracted.
3. Allow the seat belt to retract. As the seat belt retracts, you will hear a clicking sound. This indicates the seat belt is now in the Automatic Locking Mode.

How To Disengage The Automatic Locking Mode

Unbuckle the combination lap/shoulder belt and allow it to retract completely to disengage the Automatic Locking Mode and activate the vehicle sensitive (emergency) locking mode.

WARNING!

- **The seat belt assembly must be replaced if the switchable Automatic Locking Retractor (ALR) feature or any other seat belt function is not working properly when checked according to the procedures in the Service Manual.**
- **Failure to replace the seat belt assembly could increase the risk of injury in collisions.**
- **Do not use the Automatic Locking Mode to restrain occupants who are wearing the seat belt or children who are using booster seats. The locked mode is only used to install rear-facing or forward-facing child restraints that have a harness for restraining the child.**

Supplemental Restraint Systems (SRS)

Some of the safety features described in this section may be standard equipment on some models, or may be optional equipment on others. If you are not sure, ask an authorized dealer.

The air bag system must be ready to protect you in a collision. The Occupant Restraint Controller (ORC) monitors the internal circuits and interconnecting wiring associated with the electrical Air Bag System Components. Your vehicle may be equipped with the following Air Bag System Components:

Air Bag System Components

- Occupant Restraint Controller (ORC)
- Air Bag Warning Light
- Steering Wheel and Column
- Instrument Panel
- Knee Impact Bolsters
- Driver and Front Passenger Air Bags
- Seat Belt Buckle Switch
- Supplemental Side Air Bags

- Supplemental Knee Air Bags
- Front and Side Impact Sensors
- Seat Belt Pretensioners
- Seat Track Position Sensors

Air Bag Warning Light

The ORC monitors the readiness of the electronic parts of the air bag system whenever the ignition switch is in the AVV/START or MAR/ACC/ON/RUN position. If the ignition switch is in the STOP/OFF/LOCK position the air bag system is not on and the air bags will not inflate.

The ORC contains a backup power supply system that may deploy the air bag system even if the battery loses power or it becomes disconnected prior to deployment.

The ORC turns on the Air Bag Warning Light in the instrument panel for approximately four to eight seconds for a self-check when the ignition switch is in the MAR/ACC/ON/RUN position. After the self-check, the Air Bag Warning Light will turn off. If the ORC detects a malfunction in any part of the system, it turns on the Air Bag Warning Light, either momentarily or continuously. A single chime will sound to alert you if the light comes on again after initial startup.

The ORC also includes diagnostics that will illuminate the instrument panel Air Bag Warning Light if a malfunction is detected that could affect the air bag system. The diagnostics also record the nature of the malfunction. While the air bag system is designed to be maintenance free, if any of the following occurs, have an authorized dealer service the air bag system immediately.

- The Air Bag Warning Light does not come on during the four to eight seconds when the ignition switch is first in the MAR/ACC/ON/RUN position.
- The Air Bag Warning Light remains on after the four to eight-second interval.
- The Air Bag Warning Light comes on intermittently or remains on while driving.

NOTE: If the speedometer, tachometer, or any engine related gauges are not working, the Occupant Restraint Controller (ORC) may also be disabled. In this condition the air bags may not be ready to inflate for your protection. Have an authorized dealer service the air bag system immediately.

WARNING!

Ignoring the Air Bag Warning Light in your instrument panel could mean you won't have the air bag system to protect you in a collision. If the light does not come on as a bulb check when the ignition is first turned on, stays on after you start the vehicle, or if it comes on as you drive, have an authorized dealer service the air bag system immediately.

Redundant Air Bag Warning Light

If a fault with the Air Bag Warning Light is detected, which could affect the Supplemental Restraint System (SRS), the Redundant Air Bag Warning Light will illuminate on the instrument panel. The Redundant Air Bag Warning Light will stay on until the fault is cleared. In addition, a single chime will sound to alert you that the Redundant Air Bag Warning Light has come on and a fault has been detected. If the Redundant Air Bag Warning Light comes on intermittently or remains on while driving have an authorized dealer service the vehicle immediately.

For additional information regarding the Redundant Air Bag Warning Light refer to "Getting To Know Your Instrument Panel" section of this manual.

Front Air Bags

This vehicle has front air bags and lap/shoulder belts for both the driver and front passenger. The front air bags are a supplement to the seat belt restraint systems. The driver front air bag is mounted in the center of the steering wheel. The passenger front air bag is mounted in the instrument panel, above the glove compartment. The words "SRS AIRBAG" or "AIRBAG" are embossed on the air bag covers.

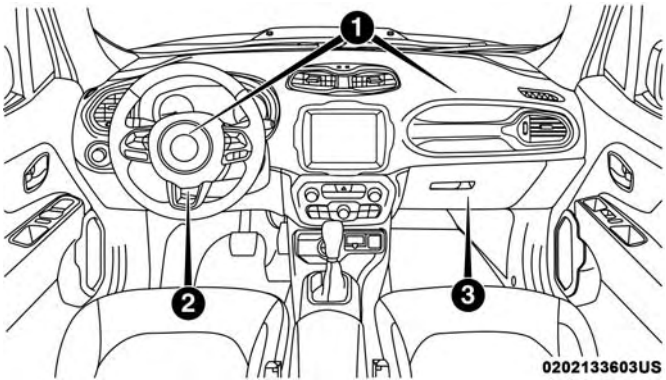

Front Air Bag/Knee Impact Bolster Locations

1 — Driver And Passenger Front Air Bags
2 — Driver Knee Impact Bolster/Supplemental Driver Knee Air Bag
3 — Passenger Knee Impact Bolster

WARNING!

- **Being too close to the steering wheel or instrument panel during front air bag deployment could cause serious injury, including death. Air bags need room to inflate. Sit back, comfortably extending your arms to reach the steering wheel or instrument panel.**
- **Never place a rear-facing child restraint in front of an air bag. A deploying passenger front air bag can cause death or serious injury to a child 12 years or younger, including a child in a rear-facing child restraint.**
- **Never install a rear-facing child restraint in the front seat of a vehicle. Only use a rear-facing child restraint in the rear seat. If the vehicle does not have a rear seat, do not transport a rear-facing child restraint in that vehicle.**

Driver And Passenger Front Air Bag Features

The Advanced Front Air Bag system has multistage driver and front passenger air bags. This system provides output appropriate to the severity and type of collision as determined by the Occupant Restraint Controller (ORC), which may receive information from the front impact sensors (if equipped) or other system components.

The first stage inflator is triggered immediately during an impact that requires air bag deployment. A low energy output is used in less severe collisions. A higher energy output is used for more severe collisions.

This vehicle may be equipped with a driver and/or front passenger seat belt buckle switch that detects whether the driver or front passenger seat belt is buckled. The seat belt buckle switch may adjust the inflation rate of the Advanced Front Air Bags.

This vehicle may be equipped with driver and/or front passenger seat track position sensors that may adjust the inflation rate of the Advanced Front Air Bags based upon seat position.

WARNING!

- **No objects should be placed over or near the air bag on the instrument panel or steering wheel because any such objects could cause harm if the vehicle is in a collision severe enough to cause the air bag to inflate.**

(Continued)

WARNING! *(Continued)*

- **Do not put anything on or around the air bag covers or attempt to open them manually. You may damage the air bags and you could be injured because the air bags may no longer be functional. The protective covers for the air bag cushions are designed to open only when the air bags are inflating.**
- **Relying on the air bags alone could lead to more severe injuries in a collision. The air bags work with your seat belt to restrain you properly. In some collisions, air bags won't deploy at all. Always wear your seat belts even though you have air bags.**

Front Air Bag Operation

Front Air Bags are designed to provide additional protection by supplementing the seat belts. Front air bags are not expected to reduce the risk of injury in rear, side, or rollover collisions. The front air bags will not deploy in all frontal collisions, including some that may produce substantial vehicle damage — for example, some pole collisions, truck underrides, and angle offset collisions.

On the other hand, depending on the type and location of impact, front air bags may deploy in crashes with little vehicle front-end damage but that produce a severe initial deceleration.

Because air bag sensors measure vehicle deceleration over time, vehicle speed and damage by themselves are not good indicators of whether or not an air bag should have deployed.

Seat belts are necessary for your protection in all collisions, and also are needed to help keep you in position, away from an inflating air bag.

When the ORC detects a collision requiring the front air bags, it signals the inflator units. A large quantity of non-toxic gas is generated to inflate the front air bags.

The steering wheel hub trim cover and the upper passenger side of the instrument panel separate and fold out of the way as the air bags inflate to their full size. The front air bags fully inflate in less time than it takes to blink your eyes. The front air bags then quickly deflate while helping to restrain the driver and front passenger.

Knee Impact Bolsters

The Knee Impact Bolsters help protect the knees of the driver and front passenger, and position the front occupants for improved interaction with the front air bags.

WARNING!

- **Do not drill, cut, or tamper with the knee impact bolsters in any way.**
- **Do not mount any accessories to the knee impact bolsters such as alarm lights, stereos, citizen band radios, etc.**

Supplemental Driver Knee Air Bag

This vehicle is equipped with a Supplemental Driver Knee Air Bag mounted in the instrument panel below the steering column. The Supplemental Driver Knee Air Bag provides enhanced protection during a frontal impact by working together with the seat belts, pretensioners, and front air bags.

Supplemental Side Air Bags

Supplemental Seat-Mounted Side Air Bags (SABs)

This vehicle is equipped with Supplemental Seat-Mounted Side Air Bags (SABs).

Supplemental Seat-Mounted Side Air Bags (SABs) are located in the outboard side of the front seats. The SABs are marked with "SRS AIRBAG" or "AIRBAG" on a label or on the seat trim on the outboard side of the seats.

The SABs may help to reduce the risk of occupant injury during certain side impacts, in addition to the injury reduction potential provided by the seat belts and body structure.

Front Supplemental Seat-Mounted Side Air Bag

When the SAB deploys, it opens the seam on the outboard side of the seatback's trim cover. The inflating SAB deploys through the seat seam into the space between the occupant and the door. The SAB moves at a very high speed and with such a high force that it could injure occupants if they are not seated properly, or if items are positioned in the area where the SAB inflates. Children are at an even greater risk of injury from a deploying air bag.

WARNING!

Do not use accessory seat covers or place objects between you and the Side Air Bags; the performance could be adversely affected and/or objects could be pushed into you, causing serious injury.

Supplemental Side Air Bag Inflatable Curtains (SABICs)

This vehicle is equipped with Supplemental Side Air Bag Inflatable Curtains (SABICs).

Supplemental Side Air Bag Inflatable Curtains (SABICs) are located above the side windows. The trim covering the SABICs is labeled “SRS AIRBAG” or “AIRBAG.”

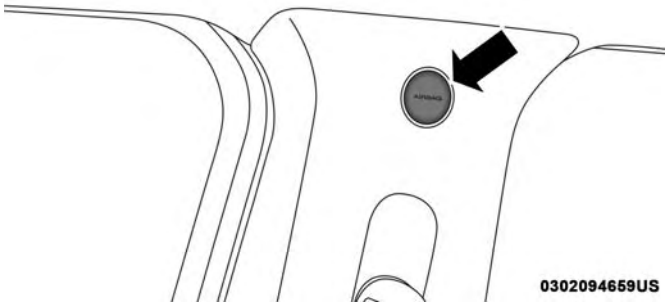

Supplemental Side Air Bag Inflatable Curtain (SABIC) Label Location

SABICs may help reduce the risk of head and other injuries to front and rear seat outboard occupants in certain side impacts, in addition to the injury reduction potential provided by the seat belts and body structure.

The SABIC deploys downward, covering the side windows. An inflating SABIC pushes the outside edge of the headliner out of the way and covers the window. The SABICs inflate with enough force to injure occupants if they are not belted and seated properly, or if items are positioned in the area where the SABICs inflate. Children are at an even greater risk of injury from a deploying air bag.

The SABICs may help reduce the risk of partial or complete ejection of vehicle occupants through side windows in certain side impact events.

WARNING!

- **Do not mount equipment, or stack luggage or other cargo up high enough to block the deployment of the SABICs. The trim covering above the side windows where the SABIC and its deployment path are located should remain free from any obstructions.**
- **In order for the SABICs to work as intended, do not install any accessory items in your vehicle which could alter the roof. Do not add an aftermarket sunroof to your vehicle. Do not add roof racks that require permanent attachments (bolts or screws) for installation on the vehicle roof. Do not drill into the roof of the vehicle for any reason.**

Side Impacts

The Side Air Bags are designed to activate in certain side impacts. The Occupant Restraint Controller (ORC) determines whether the deployment of the Side Air Bags in a particular impact event is appropriate, based on the severity and type of collision. The side impact sensors aid the ORC in determining the appropriate response to impact events. The system is calibrated to deploy the Side Air Bags on the impact side of the vehicle during impacts that require Side Air Bag occupant protection. In side impacts, the Side Air Bags deploy independently; a left side impact deploys the left Side Air Bags only and a right-side impact deploys the right Side Air Bags only. Vehicle damage by itself is not a good indicator of whether or not Side Air Bags should have deployed.

The Side Air Bags will not deploy in all side collisions, including some collisions at certain angles, or some side collisions that do not impact the area of the passenger compartment. The Side Air Bags may deploy during angled or offset frontal collisions where the front air bags deploy.

Side Air Bags are a supplement to the seat belt restraint system. Side Air Bags deploy in less time than it takes to blink your eyes.

WARNING!

- **Occupants, including children, who are up against or very close to Side Air Bags can be seriously injured or killed. Occupants, including children, should never lean on or sleep against the door, side windows, or area where the side air bags inflate, even if they are in an infant or child restraint.**
- **Seat belts (and child restraints where appropriate) are necessary for your protection in all collisions. They also help keep you in position, away from an inflating Side Air Bag. To get the best protection from the Side Air Bags, occupants must wear their seat belts properly and sit upright with their backs against the seats. Children must be properly restrained in a child restraint or booster seat that is appropriate for the size of the child.**

WARNING!

- **Side Air Bags need room to inflate. Do not lean against the door or window. Sit upright in the center of the seat.**
- **Being too close to the Side Air Bags during deployment could cause you to be severely injured or killed.**
- **Relying on the Side Air Bags alone could lead to more severe injuries in a collision. The Side Air Bags work with your seat belt to restrain you properly. In some collisions, Side Air Bags won't deploy at all. Always wear your seat belt even though you have Side Air Bags.**

NOTE: Air bag covers may not be obvious in the interior trim, but they will open during air bag deployment.

Rollover Events

Side Air Bags are designed to activate in certain rollover events. The ORC determines whether the deployment of the Side Air Bags in a particular rollover event is appropriate, based on the severity and type of collision. Vehicle damage by itself is not a good indicator of whether or not Side Air Bags should have deployed.

The Side Air Bags will not deploy in all rollover events. The rollover sensing system determines if a rollover event may be in progress and whether deployment is appropriate. In the event the vehicle experiences a rollover or near rollover event, and deployment of the Side Air Bags is appropriate, the rollover sensing system will also deploy the seat belt pretensioners on both sides of the vehicle.

The SABICs may help reduce the risk of partial or complete ejection of vehicle occupants through side windows in certain rollover or side impact events.

Air Bag System Components

NOTE: The Occupant Restraint Controller (ORC) monitors the internal circuits and interconnecting wiring associated with electrical Air Bag System Components listed below:

- Occupant Restraint Controller (ORC)
- Air Bag Warning Light
- Steering Wheel and Column
- Instrument Panel
- Knee Impact Bolsters
- Driver and Front Passenger Air Bags
- Seat Belt Buckle Switch
- Supplemental Side Air Bags
- Supplemental Knee Air Bags
- Front and Side Impact Sensors
- Seat Belt Pretensioners
- Seat Track Position Sensors

If A Deployment Occurs

The front air bags are designed to deflate immediately after deployment.

NOTE: Front and/or side air bags will not deploy in all collisions. This does not mean something is wrong with the air bag system.

If you do have a collision which deploys the air bags, any or all of the following may occur:

- The air bag material may sometimes cause abrasions and/or skin reddening to the occupants as the air bags deploy and unfold. The abrasions are similar to friction rope burns or those you might get sliding along a carpet or gymnasium floor. They are not caused by contact with chemicals. They are not permanent and normally heal quickly. However, if you haven't healed significantly within a few days, or if you have any blistering, see your doctor immediately.

- As the air bags deflate, you may see some smoke-like particles. The particles are a normal by-product of the process that generates the non-toxic gas used for air bag inflation. These airborne particles may irritate the skin, eyes, nose, or throat. If you have skin or eye irritation, rinse the area with cool water. For nose or throat irritation, move to fresh air. If the irritation continues, see your doctor. If these particles settle on your clothing, follow the garment manufacturer's instructions for cleaning.

Do not drive your vehicle after the air bags have deployed. If you are involved in another collision, the air bags will not be in place to protect you.

WARNING!

Deployed air bags and seat belt pretensioners cannot protect you in another collision. Have the air bags, seat belt pretensioners, and the seat belt retractor assemblies replaced by an authorized dealer immediately. Also, have the Occupant Restraint Controller System serviced as well.

NOTE:

- Air bag covers may not be obvious in the interior trim, but they will open during air bag deployment.
- After any collision, the vehicle should be taken to an authorized dealer immediately.

Enhanced Accident Response System

In the event of an impact, if the communication network remains intact, and the power remains intact, depending on the nature of the event, the ORC will determine whether to have the Enhanced Accident Response System perform the following functions:

- Cut off fuel to the engine (If Equipped)
- Cut off battery power to the electric motor (If Equipped)
- Flash hazard lights as long as the battery has power
- Turn on the interior lights, which remain on as long as the battery has power or for 15 minutes from the intervention of the Enhanced Accident Response System.
- Unlock the power door locks.

Your vehicle may also be designed to perform any of these other functions in response to the Enhanced Accident Response System:

- Turn off the Fuel Filter Heater, Turn off the HVAC Blower Motor, Close the HVAC Circulation Door
- Cut off battery power to the:
  - Engine
  - Electric Motor (if equipped)
  - Electric power steering
  - Brake booster
  - Electric park brake
  - Automatic transmission gear selector
  - Horn
  - Front wiper
  - Headlamp washer pump

NOTE: After an accident, remember to cycle the ignition to the STOP (OFF/LOCK) position and remove the key from the ignition switch to avoid draining the battery. Carefully check the vehicle for fuel leaks in the engine compartment and on the ground near the engine compartment and fuel tank before resetting the system and starting the engine. If there are no fuel leaks or damage to the vehicle electrical devices (e.g. headlights) after an accident, reset the system by following the procedure described below. If you have any doubt, contact an authorized dealer.

Enhanced Accident Response System Reset Procedure

After the event occurs, when the system is active, a message regarding fuel cutoff is displayed. Turn the ignition switch from ignition AVV/START or MAR/ACC/ON/RUN to ignition STOP/OFF/LOCK. Carefully check the vehicle for fuel leaks in the engine compartment and on the ground near the engine compartment and fuel tank before resetting the system and starting the engine.

Depending on the nature of the event the left and right turn signal lights, located in the instrument panel, may both be blinking and will continue to blink. In order to move your vehicle to the side of the road, you must follow the system reset procedure.

Customer Action	Customer Will See **NOTE:** Each step MUST BE held for at least two seconds
1. Turn ignition STOP/OFF/LOCK. (Turn Signal Switch Must be placed in Neutral State).	
2. Turn ignition MAR/ACC/ON/RUN.	Right turn light BLINKS. Left turn light is OFF.
3. Turn right turn signal switch ON.	Right turn light is ON SOLID. Left turn light BLINKS.
4. Place turn signal in neutral state.	Right turn light is OFF. Left turn light BLINKS.
5. Turn left turn signal switch ON.	Right turn light BLINKS. Left turn light is ON SOLID.

Customer Action	Customer Will See **NOTE:** Each step MUST BE held for at least two seconds
6. Place turn signal in neutral state.	Right turn light BLINKS. Left turn light is OFF.
7. Turn right turn signal switch ON.	Right turn light is ON SOLID. Left turn light BLINKS.
8. Place turn signal in neutral state.	Right turn light is OFF. Left turn light BLINKS.
9. Turn left turn signal switch ON.	Right turn light is ON SOLID. Left turn light is ON SOLID.
10. Turn left turn signal switch OFF. (Turn Signal Switch Must be placed in Neutral State).	Right turn light is OFF. Left turn light is OFF.

Customer Action	Customer Will See **NOTE:** Each step MUST BE held for at least two seconds
11. Turn ignition STOP/OFF/LOCK.	
12. Turn ignition MAR/ACC/ON/RUN. (Entire sequence needs to be completed within one minute or sequence will need to be repeated).	System is now reset and the engine may be started.
Turn hazard flashers OFF (Manually).	

If a reset procedure step is not completed within 60 seconds, then the turn signal lights will blink and the reset procedure must be performed again in order to be successful.

Maintaining Your Air Bag System

WARNING!

- **Modifications to any part of the air bag system could cause it to fail when you need it. You could be injured if the air bag system is not there to protect you. Do not modify the components or wiring, including adding any kind of badges or stickers to the steering wheel hub trim cover or the upper passenger side of the instrument panel. Do not modify the front bumper, vehicle body structure, or add aftermarket side steps or running boards.**
- **It is dangerous to try to repair any part of the air bag system yourself. Be sure to tell anyone who works on your vehicle that it has an air bag system.**

(Continued)

WARNING! ***(Continued)***

- **Do not attempt to modify any part of your air bag system. The air bag may inflate accidentally or may not function properly if modifications are made. Take your vehicle to an authorized dealer for any air bag system service. If your seat, including your trim cover and cushion, needs to be serviced in any way (including removal or loosening/tightening of seat attachment bolts), take the vehicle to an authorized dealer. Only manufacturer approved seat accessories may be used. If it is necessary to modify the air bag system for persons with disabilities, contact an authorized dealer.**

Event Data Recorder (EDR)

This vehicle is equipped with an event data recorder (EDR). The main purpose of an EDR is to record, in certain crash or near crash-like situations, such as an air bag deployment or hitting a road obstacle, data that will assist in understanding how a vehicle's systems performed. The EDR is designed to record data related to vehicle dynamics and safety systems for a short period of time, typically 30 seconds or less. The EDR in this vehicle is designed to record such data as:

- How various systems in your vehicle were operating;
- Whether or not the driver and passenger safety belts were buckled/fastened;
- How far (if at all) the driver was depressing the accelerator and/or brake pedal; and,
- How fast the vehicle was traveling.

These data can help provide a better understanding of the circumstances in which crashes and injuries occur.

NOTE: EDR data are recorded by your vehicle only if a non-trivial crash situation occurs; no data are recorded by the EDR under normal driving conditions and no personal data (e.g., name, gender, age, and crash location) are recorded. However, other parties, such as law enforcement, could combine the EDR data with the type of personally identifying data routinely acquired during a crash investigation.

To read data recorded by an EDR, special equipment is required, and access to the vehicle or the EDR is needed. In addition to the vehicle manufacturer, other parties, such as law enforcement, that have the special equipment, can read the information if they have access to the vehicle or the EDR.

Child Restraints

Everyone in your vehicle needs to be buckled up at all times, including babies and children. Every state in the United States, and every Canadian province, requires that small children ride in proper restraint systems. This is the law, and you can be prosecuted for ignoring it.

Children 12 years or younger should ride properly buckled up in a rear seat, if available. According to crash statistics, children are safer when properly restrained in the rear seats rather than in the front.

WARNING!

In a collision, an unrestrained child can become a projectile inside the vehicle. The force required to hold even an infant on your lap could become so great that you could not hold the child, no matter how strong you are. The child and others could be badly injured or killed. Any child riding in your vehicle should be in a proper restraint for the child's size.

There are different sizes and types of restraints for children from newborn size to the child almost large enough for an adult safety belt. Always check the child seat Owner's Manual to make sure you have the correct seat for your child. Carefully read and follow all the instructions and warnings in the child restraint Owner's Manual and on all the labels attached to the child restraint.

Before buying any restraint system, make sure that it has a label certifying that it meets all applicable Safety Standards. You should also make sure that you can install it in the vehicle where you will use it.

NOTE:

- For additional information, refer to http://www.nhtsa.gov/parents-and-caregivers or call 1-888-327-4236.
- Canadian residents should refer to Transport Canada's website for additional information: http://www.tc.gc.ca/eng/motorvehiclesafety/safedrivers-childsafety-index-53.htm.

Summary Of Recommendations For Restraining Children In Vehicles

	Child Size, Height, Weight Or Age	Recommended Type Of Child Restraint
Infants and Toddlers	Children who are two years old or younger and who have not reached the height or weight limits of their child restraint	Either an Infant Carrier or a Convertible Child Restraint, facing rearward in a rear seat of the vehicle
Small Children	Children who are at least two years old or who have outgrown the height or weight limit of their rear-facing child restraint	Forward-Facing Child Restraint with a five-point Harness, facing forward in a rear seat of the vehicle
Larger Children	Children who have outgrown their forward-facing child restraint, but are too small to properly fit the vehicle's seat belt	Belt Positioning Booster Seat and the vehicle seat belt, seated in a rear seat of the vehicle
Children Too Large for Child Restraints	Children 12 years old or younger, who have outgrown the height or weight limit of their booster seat	Vehicle Seat Belt, seated in a rear seat of the vehicle

Infant And Child Restraints

Safety experts recommend that children ride rear-facing in the vehicle until they are two years old or until they reach either the height or weight limit of their rear-facing child restraint. Two types of child restraints can be used rear-facing: infant carriers and convertible child seats.

The infant carrier is only used rear-facing in the vehicle. It is recommended for children from birth until they reach the weight or height limit of the infant carrier. Convertible child seats can be used either rear-facing or forward-facing in the vehicle. Convertible child seats often have a higher weight limit in the rear-facing direction than infant carriers do, so they can be used rear-facing by children who have outgrown their infant carrier but are still less than at least two years old. Children should remain rear-facing until they reach the highest weight or height allowed by their convertible child seat.

WARNING!

- **Never place a rear-facing child restraint in front of an air bag. A deploying passenger front air bag can cause death or serious injury to a child 12 years or younger, including a child in a rear-facing child restraint.**

(Continued)

WARNING! *(Continued)*

- **Never install a rear-facing child restraint in the front seat of a vehicle. Only use a rear-facing child restraint in the rear seat. If the vehicle does not have a rear seat, do not transport a rear-facing child restraint in that vehicle.**

Older Children And Child Restraints

Children who are two years old or who have outgrown their rear-facing convertible child seat can ride forward-facing in the vehicle. Forward-facing child seats and convertible child seats used in the forward-facing direction are for children who are over two years old or who have outgrown the rear-facing weight or height limit of their rear-facing convertible child seat. Children should remain in a forward-facing child seat with a harness for as long as possible, up to the highest weight or height allowed by the child seat.

All children whose weight or height is above the forward-facing limit for the child seat should use a belt-positioning booster seat until the vehicle's seat belts fit properly. If the child cannot sit with knees bent over the vehicle's seat cushion while the child's back is against the seatback, they should use a belt-positioning booster seat. The child and belt-positioning booster seat are held in the vehicle by the seat belt.

WARNING!

- **Improper installation can lead to failure of an infant or child restraint. It could come loose in a collision. The child could be badly injured or killed. Follow the child restraint manufacturer's directions exactly when installing an infant or child restraint.**
- **After a child restraint is installed in the vehicle, do not move the vehicle seat forward or rearward because it can loosen the child restraint attachments. Remove the child restraint before adjusting the vehicle seat position. When the vehicle seat has been adjusted, reinstall the child restraint.**
- **When your child restraint is not in use, secure it in the vehicle with the seat belt or LATCH anchorages, or remove it from the vehicle. Do not leave it loose in the vehicle. In a sudden stop or accident, it could strike the occupants or seatbacks and cause serious personal injury.**

Children Too Large For Booster Seats

Children who are large enough to wear the shoulder belt comfortably, and whose legs are long enough to bend over the front of the seat when their back is against the seatback, should use the seat belt in a rear seat. Use this simple 5-step test to decide whether the child can use the vehicle's seat belt alone:

1. Can the child sit all the way back against the back of the vehicle seat?
2. Do the child's knees bend comfortably over the front of the vehicle seat – while the child is still sitting all the way back?
3. Does the shoulder belt cross the child's shoulder between the neck and arm?
4. Is the lap part of the belt as low as possible, touching the child's thighs and not the stomach?
5. Can the child stay seated like this for the whole trip?

If the answer to any of these questions was "no," then the child still needs to use a booster seat in this vehicle. If the child is using the lap/shoulder belt, check seat belt fit periodically and make sure the seat belt buckle is latched. A child's squirming or slouching can move the belt out of position. If the shoulder belt contacts the face or neck, move the child closer to the center of the vehicle, or use a booster seat to position the seat belt on the child correctly.

WARNING!

Never allow a child to put the shoulder belt under an arm or behind their back. In a crash, the shoulder belt will not protect a child properly, which may result in serious injury or death. A child must always wear both the lap and shoulder portions of the seat belt correctly.

Recommendations For Attaching Child Restraints

Restraint Type	Combined Weight of the Child + Child Restraint	Use Any Attachment Method Shown With An "X" Below			
		LATCH – Lower Anchors Only	Seat Belt Only	LATCH – Lower Anchors + Top Tether Anchor	Seat Belt + Top Tether Anchor
Rear-Facing Child Restraint	Up to 65 lbs (29.5 kg)	X	X		
Rear-Facing Child Restraint	More than 65 lbs (29.5 kg)		X		
Forward-Facing Child Restraint	Up to 65 lbs (29.5 kg)			X	X
Forward-Facing Child Restraint	More than 65 lbs (29.5 kg)				X

Lower Anchors And Tethers For CHildren (LATCH) Restraint System

LATCH Label

Your vehicle is equipped with the child restraint anchorage system called LATCH, which stands for Lower Anchors and Tethers for CHildren. The LATCH system has three vehicle anchor points for installing LATCH-equipped child seats. There are two lower anchorages located at the back of the seat cushion where it meets the seatback and one top tether anchorage located behind the seating position. These anchorages are used to install LATCH-equipped child seats without using the vehicle's seat belts. Some seating positions may have a top tether anchorage but no lower anchorages. In these seating positions, the seat belt must be used with the top tether anchorage to install the child restraint. Please see the following table for more information.

LATCH Positions For Installing Child Restraints In This Vehicle

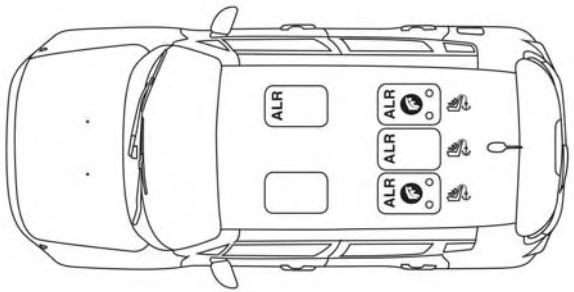

LATCH Positions

Lower Anchorage Symbol (2 Anchorages Per Seating Position)
Top Tether Anchorage Symbol

Frequently Asked Questions About Installing Child Restraints With LATCH		
What is the weight limit (child's weight + weight of the child restraint) for using the LATCH anchorage system to attach the child restraint?	65 lbs (29.5 kg)	Use the LATCH anchorage system until the combined weight of the child and the child restraint is 65 lbs (29.5 kg). Use the seat belt and tether anchor instead of the LATCH system once the combined weight is more than 65 lbs (29.5 kg).
Can the LATCH anchorages and the seat belt be used together to attach a rear-facing or forward-facing child restraint?	No	Do not use the seat belt when you use the LATCH anchorage system to attach a rear-facing or forward-facing child restraint. Booster seats may be attached to the LATCH anchorages if allowed by the booster seat manufacturer. See your booster seat owner's manual for more information.
Can a child seat be installed in the center position using the inner LATCH lower anchorages?	No	Use the seat belt and tether anchor to install a child seat in the center seating position.

Frequently Asked Questions About Installing Child Restraints With LATCH		
Can two child restraints be attached using a common lower LATCH anchorage?	No	Never “share” a LATCH anchorage with two or more child restraints. If the center position does not have dedicated LATCH lower anchorages, use the seat belt to install a child seat in the center position next to a child seat using the LATCH anchorages in an outboard position.
Can the rear-facing child restraint touch the back of the front passenger seat?	Yes	The child seat may touch the back of the front passenger seat if the child restraint manufacturer also allows contact. See your child restraint owner’s manual for more information.
Can the rear head restraints be removed?	No	

Locating The LATCH Anchorages

The lower anchorages are round bars that are found at the rear of the seat cushion where it meets the seatback, below the anchorage symbols on the seatback. They are just visible when you lean into the rear seat to install the child restraint. You will easily feel them if you run your finger along the gap between the seatback and seat cushion.

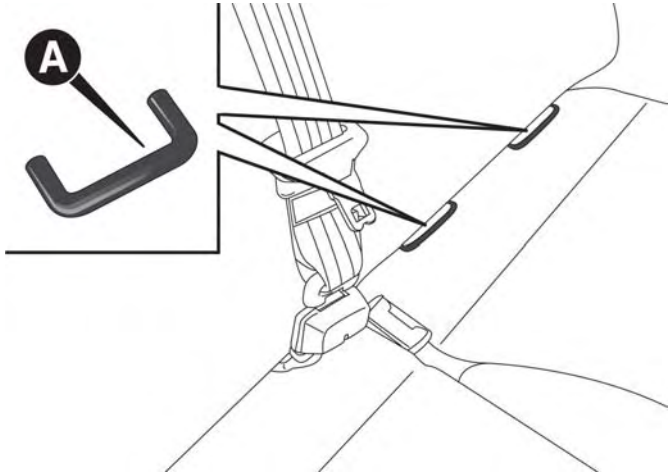

A — Lower Anchorage Location

Locating The Upper Tether Anchorages

There are tether strap anchorages behind each rear seating position located on the back of the seat.

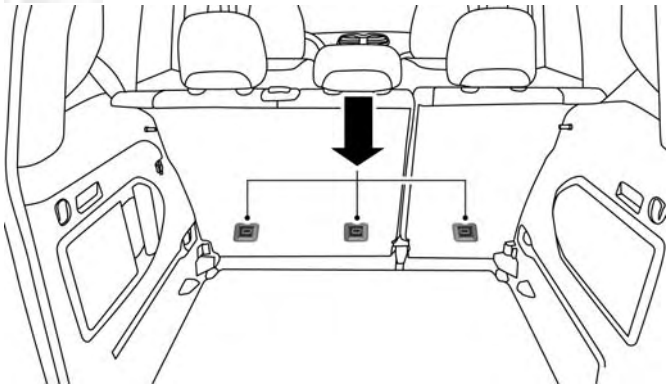

Tether Anchorage Locations

LATCH-compatible child restraint systems will be equipped with a rigid bar or a flexible strap on each side. Each will have a hook or connector to attach to the lower anchorage and a way to tighten the connection to the anchorage. Forward-facing child restraints and some rear-facing child restraints will also be equipped with a tether strap. The tether strap will have a hook at the end to attach to the top tether anchorage and a way to tighten the strap after it is attached to the anchorage.

Center Seat LATCH :

WARNING!

- **Do not install a child restraint in the center position using the LATCH system. This position is not approved for installing child seats using the LATCH attachments. You must use the seat belt and tether anchor to install a child seat in the center seating position.**
- **Never use the same lower anchorage to attach more than one child restraint. Please refer to "To Install A LATCH-Compatible Child Restraint" for typical installation instructions.**

Always follow the directions of the child restraint manufacturer when installing your child restraint. Not all child restraint systems will be installed as described here.

To Install A LATCH-Compatible Child Restraint

If the selected seating position has a Switchable Automatic Locking Retractor (ALR) seat belt, stow the seat belt, following the instructions below. See the section "Installing Child Restraints Using the Vehicle Seat Belt" to check what type of seat belt each seating position has.

1. Loosen the adjusters on the lower straps and on the tether strap of the child seat so that you can more easily attach the hooks or connectors to the vehicle anchorages.
2. Place the child seat between the lower anchorages for that seating position. For some second row seats, you may need to recline the seat and / or raise the head restraint (if adjustable) to get a better fit. If the rear seat can be moved forward and rearward in the vehicle, you may wish to move it to its rear-most position to make room for the child seat. You may also move the front seat forward to allow more room for the child seat.
3. Attach the lower hooks or connectors of the child restraint to the lower anchorages in the selected seating position.
4. If the child restraint has a tether strap, connect it to the top tether anchorage. See the section "Installing Child Restraints Using the Top Tether Anchorage" for directions to attach a tether anchor.
5. Tighten all of the straps as you push the child restraint rearward and downward into the seat. Remove slack in the straps according to the child restraint manufacturer's instructions.
6. Test that the child restraint is installed tightly by pulling back and forth on the child seat at the belt path. It should not move more than 1 inch (25.4 mm) in any direction.

How To Stow An Unused Switchable-ALR (ALR) Seat Belt:

When using the LATCH attaching system to install a child restraint, stow all ALR seat belts that are not being used by other occupants or being used to secure child restraints. An unused belt could injure a child if they play with it and accidentally lock the seat belt retractor. Before installing a child restraint using the LATCH system, buckle the seat belt behind the child restraint and out of the child's reach. If the buckled seat belt interferes with the child restraint installation, instead of buckling it behind the child restraint, route the seat belt through the child restraint belt path and then buckle it. Do not lock the seat belt. Remind all children in the vehicle that the seat belts are not toys and that they should not play with them.

WARNING!

- **Improper installation of a child restraint to the LATCH anchorages can lead to failure of the restraint. The child could be badly injured or killed. Follow the child restraint manufacturer's directions exactly when installing an infant or child restraint.**
- **Child restraint anchorages are designed to withstand only those loads imposed by correctly-fitted child restraints. Under no circumstances are they to be used for adult seat belts, harnesses, or for attaching other items or equipment to the vehicle.**

Installing Child Restraints Using The Vehicle Seat Belt

Child restraint systems are designed to be secured in vehicle seats by lap belts or the lap belt portion of a lap/shoulder belt.

WARNING!

- **Improper installation or failure to properly secure a child restraint can lead to failure of the restraint. The child could be badly injured or killed.**
- **Follow the child restraint manufacturer's directions exactly when installing an infant or child restraint.**

The seat belts in the passenger seating positions are equipped with a Switchable Automatic Locking Retractor (ALR) that is designed to keep the lap portion of the seat belt tight around the child restraint so that it is not necessary to use a locking clip. The ALR retractor can be "switched" into a locked mode by pulling all of the webbing out of the retractor and then letting the webbing retract back into the retractor. If it is locked, the ALR will make a clicking noise while the webbing is pulled back into the retractor.

Refer to the "Automatic Locking Mode" description in "Switchable Automatic Locking Retractors (ALR)" under "Occupant Restraint Systems" for additional information on ALR.

Please see the table below and the following sections for more information.

Lap/Shoulder Belt Systems For Installing Child Restraints In This Vehicle

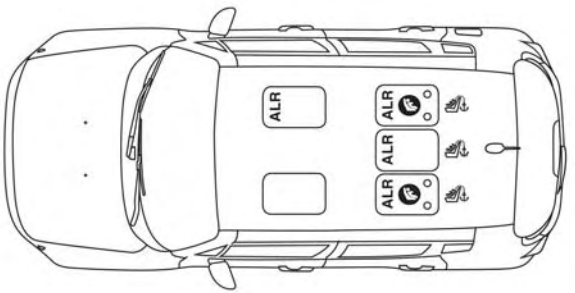

Automatic Locking Retractor (ALR) Locations

ALR = Switchable Automatic Locking Retractor
Top Tether Anchorage Symbol

Frequently Asked Questions About Installing Child Restraints With Seat Belts		
What is the weight limit (child's weight + weight of the child restraint) for using the Tether Anchor with the seat belt to attach a forward facing child restraint?	Weight limit of the Child Restraint	Always use the tether anchor when using the seat belt to install a forward facing child restraint, up to the recommended weight limit of the child restraint..
Can the rear-facing child restraint touch the back of the front passenger seat?	Yes	Contact between the front passenger seat and the child restraint is allowed, if the child restraint manufacturer also allows contact.
Can the rear head restraints be removed?	No	
Can the buckle stalk be twisted to tighten the seat belt against the belt path of the child restraint?	No	Do not twist the buckle stalk in a seating position with an ALR retractor.

Installing A Child Restraint With A Switchable Automatic Locking Retractor (ALR):

Child restraint systems are designed to be secured in vehicle seats by lap belts or the lap belt portion of a lap/shoulder belt.

WARNING!

- **Improper installation or failure to properly secure a child restraint can lead to failure of the restraint. The child could be badly injured or killed.**
- **Follow the child restraint manufacturer's directions exactly when installing an infant or child restraint.**

1. Place the child seat in the center of the seating position. For some second row seats, you may need to recline the seat and/or raise the head restraint (if adjustable) to get a better fit. If the rear seat can be moved forward and rearward in the vehicle, you may wish to move it to its rear-most position to make room for the child seat. You may also move the front seat forward to allow more room for the child seat.
2. Pull enough of the seat belt webbing from the retractor to pass it through the belt path of the child restraint. Do not twist the belt webbing in the belt path.
3. Slide the latch plate into the buckle until you hear a "click."
4. Pull on the webbing to make the lap portion tight against the child seat.
5. To lock the seat belt, pull down on the shoulder part of the belt until you have pulled all the seat belt webbing out of the retractor. Then, allow the webbing to retract back into the retractor. As the webbing retracts, you will hear a clicking sound. This means the seat belt is now in the Automatic Locking mode.
6. Try to pull the webbing out of the retractor. If it is locked, you should not be able to pull out any webbing. If the retractor is not locked, repeat step 5.
7. Finally, pull up on any excess webbing to tighten the lap portion around the child restraint while you push the child restraint rearward and downward into the vehicle seat.
8. If the child restraint has a top tether strap and the seating position has a top tether anchorage, connect the tether strap to the anchorage and tighten the tether strap. See the section "Installing Child Restraints Using the Top Tether Anchorage" for directions to attach a tether anchor.
9. Test that the child restraint is installed tightly by pulling back and forth on the child seat at the belt path. It should not move more than 1 inch (25.4 mm) in any direction.

Any seat belt system will loosen with time, so check the belt occasionally, and pull it tight if necessary.

Installing Child Restraints Using The Top Tether Anchorage:

WARNING!

Do not attach a tether strap for a rear-facing car seat to any location in front of the car seat, including the seat frame or a tether anchorage. Only attach the tether strap of a rear-facing car seat to the tether anchorage that is approved for that seating position, located behind the top of the vehicle seat. See the section "Lower Anchors and Tethers for CHildren (LATCH) Restraint System" for the location of approved tether anchorages in your vehicle.

1. Look behind the seating position where you plan to install the child restraint to find the tether anchorage. You may need to move the seat forward to provide better access to the tether anchorage. If there is no top tether anchorage for that seating position, move the child restraint to another position in the vehicle if one is available.
2. Route the tether strap to provide the most direct path for the strap between the anchor and the child seat. If your vehicle is equipped with adjustable rear head restraints, raise the head restraint, and where possible, route the tether strap under the head restraint and between the two posts. If not possible, lower the head restraint and pass the tether strap around the outboard side of the head restraint.
3. Attach the tether strap hook of the child restraint to the top tether anchorage as shown in the diagram.
4. Remove slack in the tether strap according to the child restraint manufacturer's instructions.

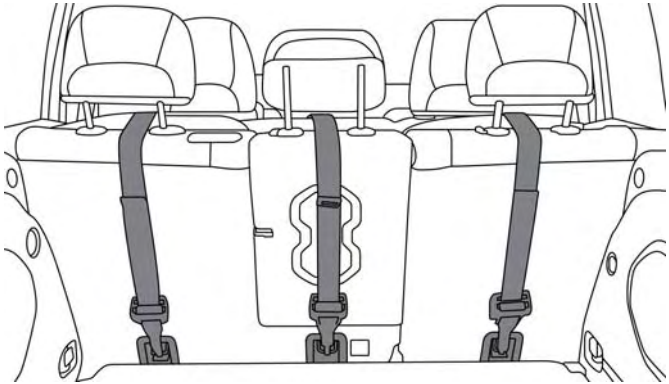

Rear Seat Tether Anchors

WARNING!

- **An incorrectly anchored tether strap could lead to increased head motion and possible injury to the child. Use only the anchorage position directly behind the child seat to secure a child restraint top tether strap.**
- **If your vehicle is equipped with a split rear seat, make sure the tether strap does not slip into the opening between the seatbacks as you remove slack in the strap.**

Transporting Pets

Air Bags deploying in the front seat could harm your pet. An unrestrained pet will be thrown about and possibly injured, or injure a passenger during panic braking or in a collision.

Pets should be restrained in the rear seat in pet harnesses or pet carriers that are secured by seat belts.

SAFETY TIPS

Transporting Passengers

NEVER TRANSPORT PASSENGERS IN THE CARGO AREA.

WARNING!

- **Do not leave children or animals inside parked vehicles in hot weather. Interior heat build-up may cause serious injury or death.**
- **It is extremely dangerous to ride in a cargo area, inside or outside of a vehicle. In a collision, people riding in these areas are more likely to be seriously injured or killed.**

(Continued)

WARNING! *(Continued)*

- **Do not allow people to ride in any area of your vehicle that is not equipped with seats and seat belts.**
- **Be sure everyone in your vehicle is in a seat and using a seat belt properly.**

Exhaust Gas

WARNING!

Exhaust gases can injure or kill. They contain carbon monoxide (CO), which is colorless and odorless. Breathing it can make you unconscious and can eventually poison you. To avoid breathing (CO), follow these safety tips:

- **Do not run the engine in a closed garage or in confined areas any longer than needed to move your vehicle in or out of the area.**
- **If you are required to drive with the trunk/liftgate/rear doors open, make sure that all windows are closed and the climate control BLOWER switch is set at high speed. DO NOT use the recirculation mode.**

(Continued)

WARNING! *(Continued)*

- **If it is necessary to sit in a parked vehicle with the engine running, adjust your heating or cooling controls to force outside air into the vehicle. Set the blower at high speed.**

The best protection against carbon monoxide entry into the vehicle body is a properly maintained engine exhaust system.

Whenever a change is noticed in the sound of the exhaust system, when exhaust fumes can be detected inside the vehicle, or when the underside or rear of the vehicle is damaged, have a competent mechanic inspect the complete exhaust system and adjacent body areas for broken, damaged, deteriorated, or mispositioned parts. Open seams or loose connections could permit exhaust fumes to seep into the passenger compartment. In addition, inspect the exhaust system each time the vehicle is raised for lubrication or oil change. Replace as required.

Safety Checks You Should Make Inside The Vehicle

Seat Belts

Inspect the seat belt system periodically, checking for cuts, frays, and loose parts. Damaged parts must be replaced immediately. Do not disassemble or modify the system.

Front seat belt assemblies must be replaced after a collision. Rear seat belt assemblies must be replaced after a collision if they have been damaged (i.e., bent retractor, torn webbing, etc.). If there is any question regarding seat belt or retractor condition, replace the seat belt.

Air Bag Warning Light

The Air Bag warning light will turn on for four to eight seconds as a bulb check when the ignition switch is first turned to ON/RUN. If the light is either not on during starting, stays on, or turns on while driving, have the system inspected at an authorized dealer as soon as possible. After the bulb check, this light will illuminate with a single chime when a fault with the Air Bag System has been detected. It will stay on until the fault is removed. If the light comes on intermittently or remains on while driving, have an authorized dealer service the vehicle immediately.

Refer to “Occupant Restraint Systems” in “Safety” for further information.

Defroster

Check operation by selecting the defrost mode and place the blower control on high speed. You should be able to feel the air directed against the windshield. See an authorized dealer for service if your defroster is inoperable.

Floor Mat Safety Information

Always use floor mats designed to fit your vehicle. Only use a floor mat that does not interfere with the operation of the accelerator, brake or clutch pedals. Only use a floor mat that is securely attached using the floor mat fasteners so it cannot slip out of position and interfere with the accelerator, brake or clutch pedals or impair safe operation of your vehicle in other ways.

WARNING!

An improperly attached, damaged, folded, or stacked floor mat, or damaged floor mat fasteners may cause your floor mat to interfere with the accelerator, brake, or clutch pedals and cause a loss of vehicle control. To prevent SERIOUS INJURY or DEATH:

- **ALWAYS securely attach your floor mat using the floor mat fasteners. DO NOT install your floor mat upside down or turn your floor mat over. Lightly pull to confirm mat is secured using the floor mat fasteners on a regular basis.**
- **ALWAYS REMOVE THE EXISTING FLOOR MAT FROM THE VEHICLE before installing any other floor mat. NEVER install or stack an additional floor mat on top of an existing floor mat.**
- **ONLY install floor mats designed to fit your vehicle. NEVER install a floor mat that cannot be properly attached and secured to your vehicle. If a floor mat needs to be replaced, only use a FCA approved floor mat for the specific make, model, and year of your vehicle.**

(Continued)

WARNING! ***(Continued)***

- **ONLY use the driver's side floor mat on the driver's side floor area. To check for interference, with the vehicle properly parked with the engine off, fully depress the accelerator, the brake, and the clutch pedal (if present) to check for interference. If your floor mat interferes with the operation of any pedal, or is not secure to the floor, remove the floor mat from the vehicle and place the floor mat in your trunk.**
- **ONLY use the passenger's side floor mat on the passenger's side floor area.**
- **ALWAYS make sure objects cannot fall or slide into the driver's side floor area when the vehicle is moving. Objects can become trapped under accelerator, brake, or clutch pedals and could cause a loss of vehicle control.**
- **NEVER place any objects under the floor mat (e.g., towels, keys, etc.). These objects could change the position of the floor mat and may cause interference with the accelerator, brake, or clutch pedals.**

(Continued)

WARNING! *(Continued)*

- **If the vehicle carpet has been removed and re-installed, always properly attach carpet to the floor and check the floor mat fasteners are secure to the vehicle carpet. Fully depress each pedal to check for interference with the accelerator, brake, or clutch pedals then re-install the floor mats.**
- **It is recommended to only use mild soap and water to clean your floor mats. After cleaning, always check your floor mat has been properly installed and is secured to your vehicle using the floor mat fasteners by lightly pulling mat.**

Periodic Safety Checks You Should Make Outside The Vehicle

Tires

Examine tires for excessive tread wear and uneven wear patterns. Check for stones, nails, glass, or other objects lodged in the tread or sidewall. Inspect the tread for cuts and cracks. Inspect sidewalls for cuts, cracks, and bulges. Check the wheel nuts for tightness. Check the tires (including spare) for proper cold inflation pressure.

Lights

Have someone observe the operation of brake lights and exterior lights while you work the controls. Check turn signal and high beam indicator lights on the instrument panel.

Door Latches

Check for proper closing, latching, and locking.

Fluid Leaks

Check area under the vehicle after overnight parking for fuel, coolant, oil, or other fluid leaks. Also, if gasoline fumes are detected or if fuel, or brake fluid leaks are suspected. The cause should be located and corrected immediately.

STARTING AND OPERATING

CONTENTS

■ STARTING THE ENGINE 233
- □ Tip Start Feature 233
- □ If Engine Fails To Start 234
- □ Cold Weather Operation 235
- □ Extended Park Starting 235
- □ After Starting — Warming Up The Engine 235
- □ Stopping The Engine 236
- □ Turbocharger "Cool Down" — If Equipped 236

■ ENGINE BREAK-IN RECOMMENDATIONS 236

■ ELECTRIC PARK BRAKE (EPB) 237
- □ Auto Park Brake 240
- □ SafeHold 240
- □ Brake Service Mode 241

■ MANUAL TRANSMISSION 242
- □ Shifting 243
- □ Downshifting 244

■ NINE-SPEED AUTOMATIC TRANSMISSION 246
- □ Gear Selector 247
- □ Gear Ranges 248
- □ Transmission Limp Home Mode 253
- □ Ignition Park Interlock 254
- □ Brake/Transmission Shift Interlock System 254

■ FOUR WHEEL DRIVE 255
- □ Four Wheel Drive (4x4) 255

■ SELEC-TERRAIN 257
- □ Mode Selection Guide 257

■ ACTIVE GRILLE SHUTTER — IF EQUIPPED 259

■ POWER STEERING 259

■ STOP/START SYSTEM 260
□ Automatic Mode 260
□ Possible Reasons The Engine Does Not Autostop 260
□ To Start The Engine While In Autostop Mode . . .261
□ To Manually Turn Off The Stop/Start System . .262
□ To Manually Turn On The Stop/Start System . . .263
□ System Malfunction 263
■ SPEED CONTROL — IF EQUIPPED 263
□ Activation 264
□ Setting A Desired Speed 264
□ Varying The Speed 264
□ Accelerating For Passing 265
□ Resume Speed 265
□ Deactivation 266
■ ADAPTIVE CRUISE CONTROL (ACC) — IF EQUIPPED 266
□ Adaptive Cruise Control (ACC) Operation 268
□ To Activate/Deactivate 268
□ Activating Adaptive Cruise Control (ACC) 269
□ To Set A Desired ACC Speed 270
□ To Cancel 270
□ To Turn Off 270
□ To Resume 271
□ To Vary The Speed Setting 271
□ Setting The Following Distance In ACC 273
□ Overtake Aid 275
□ Adaptive Cruise Control (ACC) Menu 276
□ Display Warnings And Maintenance 276
□ Precautions While Driving With ACC. 279
□ General Information 282
□ Normal (Fixed Speed) Cruise Control Mode 283
■ REAR PARKSENSE — IF EQUIPPED 286
□ Rear ParkSense Sensors 286
□ Enabling And Disabling Rear ParkSense 288

- Operation With A Trailer 288
- Service The Rear ParkSense System 289
- ParkSense System Usage Precautions 289

■ FRONT AND REAR PARKSENSE — IF EQUIPPED 290

- ParkSense Sensors 291
- ParkSense Warning Display 292
- ParkSense Display 292
- Enabling And Disabling ParkSense 301
- Service The ParkSense Park Assist System 302
- Cleaning The ParkSense System 302
- ParkSense System Usage Precautions 302
- Side Distance Warning System 304

■ PARKSENSE ACTIVE PARK ASSIST SYSTEM — IF EQUIPPED 307

- Enabling And Disabling The ParkSense Active Park Assist System 308
- Parallel Parking Space Assistance Operation/Display 309
- Perpendicular Parking Space Assistance Operation/Display 318
- Exiting The Parking Space 327

■ LANESENSE — IF EQUIPPED 335

- LaneSense Operation 335
- Turning LaneSense On Or Off 336
- LaneSense Warning Message 336
- Changing LaneSense Status 341

■ REAR BACK UP CAMERA 341

■ ADDING FUEL 343

■ VEHICLE LOADING 346

- Certification Label 346

■ TRAILER TOWING 348

- Common Towing Definitions 348

- Trailer Hitch Classification 351
- Trailer Towing Weights (Maximum Trailer Weight Ratings) 352
- Trailer And Tongue Weight 353
- Towing Requirements 353
- Towing Tips. 357

■ RECREATIONAL TOWING 358
- Towing This Vehicle Behind Another Vehicle . . .358
- Recreational Towing 359

■ DRIVING TIPS 360
- On-Road Driving Tips 360
- Off-Road Driving Tips 360

STARTING THE ENGINE

Before starting your vehicle, adjust your seat, adjust the inside and outside mirrors, fasten your seat belt, and if present, instruct all other occupants to buckle their seat belts.

WARNING!

- **Never leave children alone in a vehicle, or with access to an unlocked vehicle.**
- **Allowing children to be in a vehicle unattended is dangerous for a number of reasons. A child or others could be seriously or fatally injured. Children should be warned not to touch the parking brake, brake pedal or the gear selector.**
- **Do not leave the key fob in or near the vehicle (or in a location accessible to children), and do not leave the ignition in the ON or RUN mode. A child could operate power windows, other controls, or move the vehicle.**

Start the engine with the gear selector in the NEUTRAL or PARK position. Apply the brake before shifting to any driving range.

Proceed as follows:

1. Set the Electric Park Brake (EPB) and put the gear selector in the PARK or NEUTRAL position.
2. Press on the brake pedal, without pressing the accelerator.
3. Cycle the ignition to the START mode and release it as soon as the engine is started.
4. If the engine does not start, place the ignition in the OFF mode and wait 10-15 seconds before attempting to restart the engine.

Tip Start Feature

Do not press the accelerator. Cycle the ignition switch briefly to the START mode and release it. The starter motor will continue to run but will automatically disengage when the engine is running.

If Engine Fails To Start

WARNING!

Never pour fuel or other flammable liquid into the throttle body air inlet opening in an attempt to start the vehicle. This could result in flash fire causing serious personal injury.

If the engine fails to start after you have followed the "Normal Starting" or "Extreme Cold Weather" procedure, and has not experienced an extended park condition as identified in "Extended Park Starting" procedure it may be flooded. Push the accelerator pedal all the way to the floor and hold it there. Crank the engine for no more than 15 seconds. This should clear any excess fuel in case the engine is flooded. Leave the ignition in RUN mode, release the accelerator pedal and repeat the "Normal Starting" procedure.

WARNING!

- **Never pour fuel or other flammable liquid into the throttle body air inlet opening in an attempt to start the vehicle. This could result in flash fire causing serious personal injury.**
- **Do not attempt to push or tow your vehicle to get it started. Vehicles equipped with an automatic transmission cannot be started this way. Unburned fuel could enter the catalytic converter and once the engine has started, ignite and damage the converter and vehicle.**
- **If the vehicle has a discharged battery, booster cables may be used to obtain a start from a booster battery or the battery in another vehicle. This type of start can be dangerous if done improperly. Refer to "Jump-Starting" in "In Case Of Emergency" for further information.**

CAUTION!

To prevent damage to the starter, do not continuously crank the engine for more than 25 seconds at a time. Wait 60 seconds before trying again.

Cold Weather Operation

To ensure reliable starting under extreme cold conditions an externally powered electric block heater (if equipped) is required for the 1.3L Turbo engine below -20°F (-29°C) and for the 2.4L engine below -31°F (-35°C) and is recommended for the 2.4L engine below -20°F (-29°C).

To prevent possible engine damage while starting at low temperatures, this vehicle will inhibit engine cranking when the ambient temperature is less than -20°F (-29°C) for the 1.3L Turbo engine, and -31°F (-35°C) for the 2.4L engine, and the oil temperature sensor reading indicates an engine block heater has not been used. The message "plug in engine heater" will be displayed in the instrument cluster when the ambient temperature is below -4°F (-20°C) at the time the engine is shut off as a reminder to avoid possible crank delays at the next cold start.

Extended Park Starting

NOTE: Extended Park condition occurs when the vehicle has not been started or driven for at least 30 days.

1. Install a battery charger or jumper cables to the battery to ensure a full battery charge during the crank cycle.
2. Cycle the ignition to the START mode and release it when the engine starts.
3. If the engine fails to start within 10 to 15 seconds, cycle the ignition to the OFF mode, wait five seconds to allow the starter to cool, then repeat the Extended Park Starting procedure.
4. If the engine fails to start after eight attempts, allow the starter to cool for at least 10 minutes, then repeat the procedure.

CAUTION!

To prevent damage to the starter, do not crank continuously for more than 10 seconds at a time. Wait 10 to 15 seconds before trying again.

After Starting — Warming Up The Engine

Proceed as follows:

- Travel slowly, letting the engine run at a reduced RPM, without accelerating suddenly.
- It is recommended to wait until the engine coolant temperature gauge starts to rise for maximum performance.

Stopping The Engine

To shut off the engine with vehicle speed greater than 5 mph (8 km/h), you must push and hold the ignition or push the START/STOP button three times consecutively within a few seconds. The engine will shut down, and the ignition will be placed in the RUN position.

Turning OFF the car (cycle the ignition from the RUN mode to the OFF mode), the power supply to the accessories are maintained for a period of three minutes.

NOTE: If the vehicle fails to shut off using the ignition, refer to "Instrument Cluster Display" in "Getting To Know Your Instrument Panel" for further information.

Opening the driver side door with the ignition in RUN will sound a short chime that reminds the driver to place the ignition to OFF.

When the ignition is in the OFF mode, the window switches remains active for three minutes. Opening a front door will cancel this function.

After severe driving, idle the engine to allow the temperature inside the engine compartment to cool before shutting off the engine.

Turbocharger "Cool Down" — If Equipped

This vehicle is equipped with an after-run pump to cool the turbocharger after the engine is shut off. Depending on the type of driving and the amount of cargo, the pump will run for up to 10 minutes after the engine has been shut off to circulate coolant through the turbocharger. Although the pump is rubber-mounted for quiet operation, it is normal to hear it running during this time.

ENGINE BREAK-IN RECOMMENDATIONS

A long break-in period is not required for the engine and drivetrain (transmission and axle) in your vehicle.

Drive moderately during the first 300 miles (500 km). After the initial 60 miles (100 km), speeds up to 50 or 55 mph (80 or 90 km/h) are desirable.

While cruising, brief full-throttle acceleration within the limits of local traffic laws contributes to a good break-in. Wide-open throttle acceleration in low gear can be detrimental and should be avoided.

The engine oil installed in the engine at the factory is a high-quality energy conserving type lubricant. Oil changes should be consistent with anticipated climate conditions under which vehicle operations will occur. For the recommended viscosity and quality grades, refer to "Dealer Service" in "Servicing And Maintenance".

CAUTION!

Never use Non-Detergent Oil or Straight Mineral Oil in the engine or damage may result.

NOTE: A new engine may consume some oil during its first few thousand miles (kilometers) of operation. This should be considered a normal part of the break-in and not interpreted as a problem.

ELECTRIC PARK BRAKE (EPB)

Your vehicle is equipped with an Electric Park Brake System (EPB) that offers simple operation, and some additional features that make the parking brake more convenient and useful.

The parking brake is primarily intended to prevent the vehicle from rolling while parked. Before leaving the vehicle, make sure that the parking brake is applied. Also, be certain to leave the transmission in PARK.

The EPB switch is located in the center console.

You can engage the EPB in two ways;

- Manually, by applying the park brake switch.
- Automatically, by enabling the Auto Park Brake feature in the customer programmable features section of the Uconnect settings or in "Safe Hold" conditions.

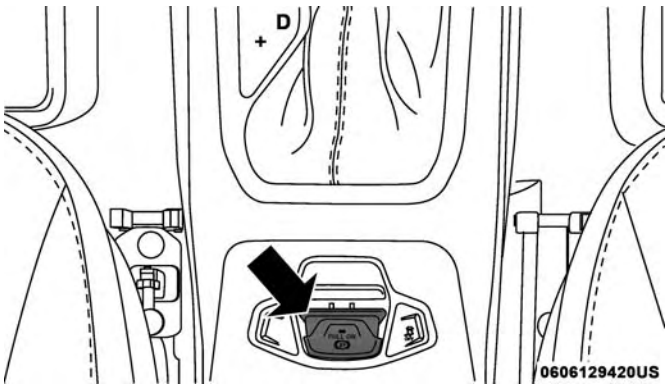

Electric Park Brake Switch

To apply the EPB manually, pull up on the switch momentarily. You may hear a slight whirring sound from the back of the vehicle while the EPB engages. Once the parking brake is fully engaged, the BRAKE warning lamp in the instrument cluster and an indicator on the switch will illuminate. If your foot is on the brake pedal while you apply the EPB, you may notice a small amount of brake pedal movement. The EPB can be applied even when the ignition is in the OFF mode however, it can only be released when the ignition is in the RUN mode.

NOTE: The EPB fault lamp will illuminate if the EPB switch is held for longer than 60 seconds in either the released or applied position. The light will extinguish upon releasing the switch.

If the Auto Park Brake feature is enabled, the EPB will automatically engage whenever the transmission is moved into PARK, or with a manual transmission, when the ignition switch is in the STOP/OFF position. If your foot is on the brake pedal, you may notice a small amount of brake pedal movement while the EPB is engaging.

The electric park brake will be automatically released if the driver's seat belt is buckled (only in case of automatic transmission) and driver's intention to start (in forward or reverse direction) is recognized by the system

To release the EPB manually, the ignition must be in the RUN mode. Put your foot on the brake pedal, then push the EPB switch down momentarily. You may hear a slight whirring sound from the back of the car while the parking brake disengages. You may also notice a small amount of movement in the brake pedal. Once the EPB is fully disengaged, the BRAKE warning lamp in the instrument cluster and the LED indicator on the switch will extinguish.

NOTE:

- When parking on a hill, it is important to turn the front wheels toward the curb on a downhill grade and away from the curb on an uphill grade. Apply the EPB before placing the gear selector in PARK, otherwise the load on the transmission locking mechanism may make it difficult to move the gear selector out of PARK. The EPB should always be applied whenever the driver is not in the vehicle.
- If the clutch pedal is released at the same time the gas pedal is pressed, the EPB will be automatically released (manual transmissions only).

WARNING!

- **When exiting the vehicle, always remove the key fob from the vehicle and lock your vehicle.**
- **Never leave children alone in a vehicle, or with access to an unlocked vehicle. Allowing children to be in a vehicle unattended is dangerous for a number of reasons. A child or others could be seriously or fatally injured. Children should be warned not to touch the parking brake, brake pedal or the transmission gear selector.**
- **Do not leave the key fob in or near the vehicle (or in a location accessible to children), and do not leave the ignition in the ON or RUN mode. A child could operate power windows, other controls, or move the vehicle.**
- **Be sure the parking brake is fully disengaged before driving; failure to do so can lead to brake failure and a collision.**
- **Always fully apply the parking brake when leaving your vehicle, or it may roll and cause damage or injury. Also be certain to leave the transmission in PARK. Failure to do so may allow the vehicle to roll and cause damage or injury.**

CAUTION!

If the Brake System Warning Light remains on with the parking brake released, a brake system malfunction is indicated. Have the brake system serviced by an authorized dealer immediately.

If exceptional circumstances should make it necessary to engage the EPB while the vehicle is in motion, maintain upward pressure on the EPB switch for as long as engagement is desired. The brake warning lamp could illuminate in case of the hydraulic system is not available. The rear stop lamps will also be illuminated automatically while the vehicle remains in motion.

To disengage the EPB while the vehicle is in motion, release the switch. If the vehicle is brought to a complete stop using the EPB, when the vehicle reaches approximately 1.9 mph (3 km/h) the EPB will remain engaged.

WARNING!

Driving the vehicle with the parking brake engaged, or repeated use of the parking brake to slow the vehicle may cause serious damage to the brake system. Be sure the parking brake is fully disengaged before driving; failure to do so can lead to brake failure and a collision.

In the unlikely event of a malfunction of the EPB system, a yellow EPB fault lamp will illuminate. This may be accompanied by the Brake warning lamp flashing. In this status some EPB functionalities may be deactivated. In this event, urgent service of the EPB system is required. Do not rely on the EPB to hold the vehicle stationary.

Auto Park Brake

The EPB can be programmed to be applied automatically whenever the vehicle speed is below 1.9 mph (3 km/h) and the automatic transmission is placed in PARK, or with a manual transmission, whenever the ignition is in the OFF mode. Auto Park Brake is enabled and disabled by customer selection through the Customer Programmable Features section of the Uconnect Settings.

Any single Auto Park Brake application can be bypassed by pushing the EPB switch to the release position while the transmission is placed in PARK (automatic transmission) and the ignition is in the RUN mode. In some cases, with an automatic transmission, if at the cycle of key from RUN to the OFF mode the gear selector is not firmly locked in Parking position, EPB applies automatically even if Auto Park Brake has been previously disabled.

SafeHold

SafeHold is a safety feature of the EPB system that will engage the park brake automatically if the vehicle is left unsecured while the ignition is in the RUN mode.

For automatic transmissions, the EPB will automatically engage if all of the following conditions are met:

- Vehicle speed is below 1.9 mph (3 km/h).
- There is no attempt to depress the brake pedal or accelerator pedal.
- The seat belt is unbuckled.
- The driver door is open.
- The vehicle is not in the PARK position.

For manual transmissions, the EPB will automatically engage if all of the following conditions are met:

- Vehicle speed is below 1.9 mph (3 km/h).
- There is no attempt to depress the brake pedal or accelerator pedal.
- The clutch pedal is not pressed.
- The seat belt is unbuckled.
- The driver door is open.

SafeHold can be temporarily bypassed by pushing the EPB Switch while the driver door is open and the brake pedal is pressed. Once manually bypassed, SafeHold will be enabled again once the vehicle reaches 12 mph (20 km/h) or the ignition is cycled to the OFF mode and back to RUN again.

Brake Service Mode

We recommend having your brakes serviced by your authorized dealer. You should only make repairs for which you have the knowledge and the right equipment. You should only enter Brake Service Mode during brake service.

When servicing your rear brakes, it may be necessary for you or your technician to push the rear piston into the rear caliper bore. With the electric park brake system, this can only be done after retracting the EPB actuator. The actuator retraction can be done easily by entering the Brake Service Mode through the Uconnect Settings in your vehicle. This menu based system will guide you through the steps necessary to retract the EPB actuator in order to perform rear brake service.

Service Mode has requirements that must be met in order to be activated:

- The vehicle must be at a standstill.
- The parking brake must be disabled.
- The transmission must be in park or neutral.
- The EPB switch not activated.
- The vehicle in ignition RUN mode.
- The brake pedal not pressed.

While in service mode, the EPB fault lamp will flash continuously while the ignition is in the RUN mode.

NOTE: A dedicated message will appear in the instrument cluster if Brake Service Mode cannot be activated.

When brake service work is complete, the following steps must be followed to reset the parking brake system to normal operation:

- Ensure the vehicle is at a standstill.
- Press the brake pedal with moderate force.
- Apply the EPB Switch.

NOTE: A dedicated message will appear in the instrument cluster if Brake Service Mode cannot be deactivated.

WARNING!

You can be badly injured working on or around a motor vehicle. Do only that service work for which you have the knowledge and the right equipment. If you have any doubt about your ability to perform a service job, take your vehicle to a competent mechanic.

MANUAL TRANSMISSION

WARNING!

You or others could be injured if you leave the vehicle unattended without having the parking brake fully applied. The parking brake should always be applied when the driver is not in the vehicle, especially on an incline.

CAUTION!

Never drive with your foot resting on the clutch pedal, or attempt to hold the vehicle on a hill with the clutch pedal partially engaged, as this will cause abnormal wear on the clutch.

NOTE: During cold weather, you may experience increased effort in shifting until the transmission fluid warms up. This is normal.

To shift the gears, press the clutch pedal to the floor and put the gear selector to the desired position (the diagram for the engagement of the gears is displayed on the handle of the lever).

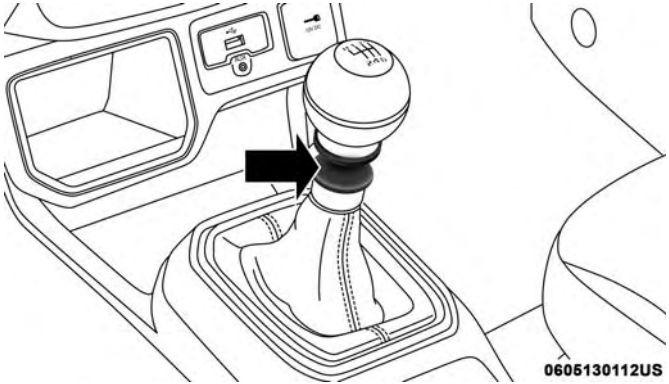

REVERSE Ring

To engage REVERSE gear from the NEUTRAL position, lift the REVERSE ring, located below the knob and simultaneously move the lever to the left and then forward.

Shifting

Fully press the clutch pedal before shifting gears. As you release the clutch pedal, lightly press the accelerator pedal.

You should always use first gear when starting from a standing position.

Recommended Vehicle Shift Speeds

To utilize your manual transmission efficiently for fuel economy and performance, it should be upshifted as listed in the recommended shift speed chart. Shift at the vehicle speeds listed for acceleration. When heavily loaded or pulling a trailer, these recommended up-shift speeds may not apply.

Manual Transmission Shift Speeds in MPH (KM/H)					
All Engines	Gear Selection	2 to 3	3 to 4	4 to 5	5 to 6
	Accel.	24 (39)	34 (55)	47 (76)	56 (90)
	Cruise	19 (31)	27 (43)	37 (60)	41 (66)

NOTE: A certain amount of noise from the transmission is normal. This noise can be most noticeable when the vehicle is idling in NEUTRAL with the clutch engaged (clutch pedal released), but it may also be heard when driving. The noise may also be more noticeable when the transmission is warm. This noise is normal and is not an indication of a problem with your clutch or transmission.

Downshifting

Moving from a high gear down to a lower gear is recommended to preserve brakes when driving down steep hills. In addition, downshifting at the right time provides better acceleration when you desire to resume speed. Downshift progressively. Do not skip gears to avoid overspeeding the engine and clutch.

WARNING!

Do not downshift for additional engine braking on a slippery surface. The drive wheels could lose their grip, and the vehicle could skid.

CAUTION!

- **Skipping gears and downshifting into lower gears at higher vehicle speeds can damage the engine and clutch systems, Any attempt to shift into lower gear with clutch pedal depressed may result damage to the clutch system. Shifting into lower gear and releasing the clutch may result in engine damage.**
- **When descending a hill, be very careful to downshift one gear at a time to prevent overspeeding the engine which can cause engine damage, and/or clutch damage, even if the clutch pedal is pressed. If transfer case is in low range the vehicle speeds to cause engine and clutch damage are significantly lower.**
- **Failure to follow the maximum recommended downshifting speeds may cause the engine damage and/or damage the clutch, even if the clutch pedal is pressed.**
- **Descending a hill in low range with clutch pedal depressed could result in clutch damage.**

Maximum Recommended Downshift Speeds

CAUTION!

Failure to follow the maximum recommended downshifting speeds may cause the engine to overspeed and/or damage the clutch disc, even if the clutch pedal is pressed.

Manual Transmission Shift Speeds in MPH (KM/H)					
Gear Selection	6 to 5	5 to 4	4 to 3	3 to 2	2 to 1
Maximum Speed	80 (129)	70 (113)	50 (81)	30 (48)	15 (24)

CAUTION!

If you skip a gear while downshifting or downshift at too high of a vehicle speed, these conditions may cause the engine to overspeed if too low of a gear is selected and the clutch pedal is released. Damage to the clutch and the transmission can result from skipping a gear while downshifting or downshifting at too high of a vehicle speed even if the clutch pedal is held pressed (i.e., not released).

NINE-SPEED AUTOMATIC TRANSMISSION

Your vehicle is equipped with a state of the art, fuel efficient nine-speed transmission.

The transmission gear range (PRND) is displayed beside the gear selector and in the instrument cluster display. To select a gear range, push the lock button on the gear selector and move the selector rearward or forward. You must also press the brake pedal to shift the transmission out of PARK, or to shift from NEUTRAL into DRIVE or REVERSE when the vehicle is stopped or moving at low speeds (refer to "Brake/Transmission Shift Interlock System" in this section). Select the DRIVE range for normal driving.

The electronically-controlled transmission adapts its shift schedule based on driver inputs, along with environmental and road conditions. The transmission electronics are self-calibrating; therefore, the first few shifts on a new vehicle may be somewhat abrupt. This is a normal condition, and precision shifts will develop within a few hundred miles (kilometers).

WARNING!

- **It is dangerous to shift out of PARK or NEUTRAL if the engine speed is higher than idle speed. If your foot is not firmly pressing the brake pedal, the vehicle could accelerate quickly forward or in reverse. You could lose control of the vehicle and hit someone or something. Only shift into gear when the engine is idling normally and your foot is firmly pressing the brake pedal.**
- **Unintended movement of a vehicle could injure those in or near the vehicle. As with all vehicles, you should never exit a vehicle while the engine is running. Before exiting a vehicle, always come to a complete stop, then apply the parking brake, shift the transmission into PARK, and turn the ignition OFF. When the ignition is in the OFF mode, the transmission is locked in PARK, securing the vehicle against unwanted movement.**
- **When leaving the vehicle, always make sure the ignition is in the OFF mode, remove the key fob from the vehicle, and lock the vehicle.**

(Continued)

WARNING! *(Continued)*

- **Never leave children alone in a vehicle, or with access to an unlocked vehicle. Allowing children to be in a vehicle unattended is dangerous for a number of reasons. A child or others could be seriously or fatally injured. Children should be warned not to touch the parking brake, brake pedal or the transmission gear selector.**
- **Do not leave the key fob in or near the vehicle (or in a location accessible to children), and do not leave the ignition in the ON or RUN mode. A child could operate power windows, other controls, or move the vehicle.**

CAUTION!

Damage to the transmission may occur if the following precautions are not observed:

- **Shift into or out of PARK or REVERSE only after the vehicle has come to a complete stop.**
- **Do not shift between PARK, REVERSE, NEUTRAL, or DRIVE when the engine is above idle speed.**
- **Before shifting into any gear, make sure your foot is firmly pressing the brake pedal.**

NOTE: You must press and hold the brake pedal while shifting out of PARK.

Gear Selector

The transmission gear selector has PARK, REVERSE, NEUTRAL, DRIVE, and AutoStick (+/-) shift positions. Manual shifts can be made using the AutoStick shift control (refer to "AutoStick" in this section for further information). Toggling the gear selector forward (-) or rearward (+) while in the AutoStick position (beside the DRIVE position) will manually select the transmission gear, and will display the current gear in the instrument cluster as 1, 2, 3, etc.

NOTE: If the gear selector cannot be moved to the PARK, REVERSE, or NEUTRAL position (when pushed forward) it is probably in the AutoStick (+/-) position (beside the DRIVE position). In AutoStick mode, the transmission gear (1, 2, 3, etc.) is displayed in the instrument cluster. Move the gear selector to the right (into the DRIVE [D] position) for access to PARK, REVERSE, and NEUTRAL.

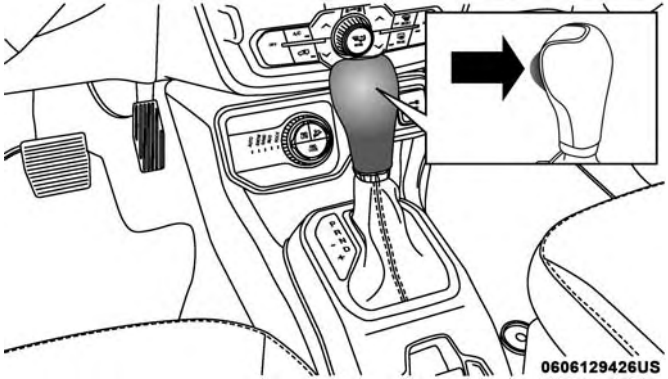

Gear Selector Lock Button

The nine-speed transmission has been developed to meet the needs of FCA current and future lineup of FWD/AWD vehicles. Software and calibration is refined to optimize the customer's driving experience and fuel economy. By design, some vehicle and drive-line combinations utilize 9th gear only in very specific driving situations and conditions.

Only shift from DRIVE to PARK or REVERSE when the accelerator pedal is released and the vehicle is stopped. Be sure to keep your foot on the brake pedal when shifting between these gears.

DO NOT depress the accelerator pedal when shifting from PARK or NEUTRAL into another gear range.

CAUTION!

After selecting any gear range, wait a moment to allow the selected gear to engage before accelerating. This is especially important when the engine is cold.

Gear Ranges

PARK (P)

This range supplements the Electric Park Brake (EPB) by locking the transmission. The engine can be started in this range. Never attempt to use PARK while the vehicle is in motion. Apply the EPB when exiting the vehicle in this range.

When parking on a level surface, you may shift the transmission into PARK first, and then apply the EPB.

When parking on a hill, apply the EPB before shifting the transmission to PARK, otherwise the load on the transmission locking mechanism may make it difficult to move the gear selector out of PARK. As an added precaution, turn the front wheels toward the curb on a downhill grade and away from the curb on an uphill grade.

When exiting the vehicle, always:

- Apply the parking brake.
- Shift the transmission into PARK.
- Turn the ignition OFF.
- Remove the key fob from the vehicle.

WARNING!

- **Never use the PARK position as a substitute for the park brake. Always apply the park brake fully when exiting the vehicle to guard against vehicle movement and possible injury or damage.**
- **Your vehicle could move and injure you and others if it is not in PARK. Check by trying to move the transmission gear selector out of PARK with the brake pedal released. Make sure the transmission is in PARK before exiting the vehicle.**
- **The transmission may not engage PARK if the vehicle is moving. Always bring the vehicle to a complete stop before shifting to PARK, and verify that the transmission gear position indicator solidly indicates PARK (P) without blinking. Ensure that the**

(Continued)

WARNING! ***(Continued)***

vehicle is completely stopped, and the PARK position is properly indicated, before exiting the vehicle.

- **It is dangerous to shift out of PARK or NEUTRAL if the engine speed is higher than idle speed. If your foot is not firmly pressing the brake pedal, the vehicle could accelerate quickly forward or in reverse. You could lose control of the vehicle and hit someone or something. Only shift into gear when the engine is idling normally (or stopped) and your foot is firmly pressing the brake pedal.**
- **Unintended movement of a vehicle could injure those in or near the vehicle. As with all vehicles, you should never exit a vehicle while the engine is running or the propulsion system is active. Before exiting a vehicle, always come to a complete stop, then apply the park brake, shift the transmission into PARK, and turn the ignition OFF. When the ignition is in the OFF mode, the transmission is locked in PARK, securing the vehicle against unwanted movement.**

(Continued)

WARNING! *(Continued)*

- **When leaving the vehicle, always make sure the ignition is in the OFF mode, remove the key fob from the vehicle, and lock the vehicle.**
- **Never leave children alone in a vehicle, or with access to an unlocked vehicle. Allowing children to be in a vehicle unattended is dangerous for a number of reasons. A child or others could be seriously or fatally injured. Children should be warned not to touch the park brake, brake pedal or the transmission gear selector.**
- **Do not leave the key fob in or near the vehicle (or in a location accessible to children), and do not leave the ignition in the ON/RUN mode. A child could operate power windows, other controls, or move the vehicle.**

CAUTION!

- **Before moving the transmission gear selector out of PARK, you must turn the ignition to the ON/RUN mode, and also press the brake pedal. Otherwise, damage to the gear selector could result.**
- **DO NOT race the engine when shifting from PARK or NEUTRAL into another gear range, as this can damage the drivetrain.**

The following indicators should be used to ensure that you have properly engaged the transmission into the PARK position:

- When shifting into PARK, press the lock button on the gear selector, and firmly move the gear selector all the way forward until it stops and is fully seated.
- Look at the transmission gear position display and verify that it indicates the PARK position (P), and is not blinking.
- With the brake pedal released, verify that the gear selector will not move out of PARK.

REVERSE (R)

This range is for moving the vehicle backward. Shift into REVERSE only after the vehicle has come to a complete stop.

NEUTRAL (N)

Use this range when the vehicle is standing for prolonged periods with the engine running. The engine may be started in this range. Apply the electric park brake and shift the transmission into PARK if you must exit the vehicle.

WARNING!

Do not coast in NEUTRAL and never turn off the ignition to coast down a hill. These are unsafe practices that limit your response to changing traffic or road conditions. You might lose control of the vehicle and have a collision.

CAUTION!

Towing the vehicle, coasting, or driving for any other reason with the transmission in NEUTRAL can cause severe transmission damage. Refer to "Recreational Towing" in "Starting And Operating" and "Towing A Disabled Vehicle" in "In Case Of Emergency" for further information.

DRIVE (D)

This range should be used for most city and highway driving. It provides the smoothest upshifts and downshifts, and the best fuel economy. The transmission automatically upshifts through all forward gears. The DRIVE position provides optimum driving characteristics under all normal operating conditions.

When frequent transmission shifting occurs (such as when operating the vehicle under heavy loading conditions, in hilly terrain, traveling into strong head winds or while towing a heavy trailer), use the AutoStick shift control (refer to "AutoStick" in this section for further information) to select a lower gear. Under these conditions, using a lower gear will improve performance and extend transmission life by reducing excessive shifting and heat buildup.

If the transmission temperature exceeds normal operating limits, the transmission controller may modify the transmission shift schedule, reduce engine torque, and/or expand the range of torque converter clutch engagement. This is done to prevent transmission damage due to overheating.

If the transmission becomes extremely hot, the "Transmission Temperature Warning Light" may illuminate and the transmission may operate differently until the transmission cools down.

During cold temperatures, transmission operation may be modified depending on engine and transmission temperature as well as vehicle speed. This feature improves warm up time of the engine and transmission to achieve maximum efficiency. Engagement of the torque converter clutch, and shifts into 8th or 9th gear, are inhibited until the transmission fluid is warm. Normal operation will resume once the transmission temperature has risen to a suitable level.

AutoStick

AutoStick is a driver-interactive transmission feature providing manual shift control, giving you more control of the vehicle. AutoStick allows you to maximize engine braking, eliminate undesirable upshifts and downshifts, and improve overall vehicle performance. This system can also provide you with more control during passing, city driving, cold slippery conditions, mountain driving, trailer towing and many other situations.

Operation

When the gear selector is in the AutoStick position (beside the DRIVE position), it can be moved forward and rearward. This allows the driver to manually select the transmission gear being used. Moving the gear selector forward (-) triggers a downshift, and rearward (+) an upshift. The current gear is displayed in the instrument cluster.

NOTE: In AutoStick mode, the transmission will only shift up or down when the driver moves the gear selector rearward (+) or forward (-), except as described below.

- The transmission will automatically upshift when necessary to prevent engine overspeed.

- The transmission will automatically downshift as the vehicle slows (to prevent engine lugging) and will display the current gear.
- The transmission will automatically downshift to first or second gear (depending on model) when coming to a stop. After a stop, the driver should manually upshift (+) the transmission as the vehicle is accelerated.
- You can start out (from a stop) in first or second gear. Starting out in second gear can be helpful in snow or icy conditions. Tap the gear selector forward or rearward to select the desired gear after the vehicle is brought to a stop.
- If a requested downshift would cause the engine to overspeed, that shift will not occur.
- The system will ignore attempts to upshift at too low of a vehicle speed.
- Avoid using speed control when AutoStick is engaged because the transmission will not shift automatically.
- Transmission shifting will be more noticeable when AutoStick is enabled.
- The system may revert to automatic shift mode if a fault or overheat condition is detected.

To disengage AutoStick mode, return the gear selector to the DRIVE position. You can shift in or out of the AutoStick position at any time without taking your foot off the accelerator pedal.

WARNING!

Do not downshift for additional engine braking on a slippery surface. The drive wheels could lose their grip and the vehicle could skid, causing a collision or personal injury.

Transmission Limp Home Mode

Transmission function is electronically monitored for abnormal conditions. If a condition is detected that could result in transmission damage, Transmission Limp Home Mode is activated. In this mode, the transmission may operate only in a fixed gear, or may remain in neutral. The Malfunction Indicator Light (MIL) may be illuminated. Limp Home Mode may allow the vehicle to be driven to an authorized dealer for service without damaging the transmission.

In the event of a momentary problem, the transmission can be reset to regain all forward gears by performing the following steps:

1. Stop the vehicle.
2. Shift the transmission into PARK, if possible. If not, shift the transmission to NEUTRAL.
3. Push and hold the ignition switch until the engine turns OFF.
4. Wait approximately 30 seconds.
5. Restart the engine.
6. Shift into the desired gear range. If the problem is no longer detected, the transmission will return to normal operation.

NOTE: Even if the transmission can be reset, we recommend that you visit an authorized dealer at your earliest possible convenience. An authorized dealer has diagnostic equipment to determine if the problem could recur. If the transmission cannot be reset, authorized dealer service is required.

Ignition Park Interlock

This vehicle is equipped with an Ignition Park Interlock, which requires the transmission to be in PARK before the ignition can be turned to the OFF mode. Also, the transmission is locked in PARK whenever the ignition is in the OFF mode.

Brake/Transmission Shift Interlock System

This vehicle is equipped with a Brake Transmission Shift Interlock system (BTSI) that holds the transmission gear selector in PARK unless the brakes are applied. To shift the transmission out of PARK, the ignition must be in the RUN mode (engine running or not) and the brake pedal must be pressed.

The brake pedal must also be pressed before pushing the button on the gear selector to shift from NEUTRAL into DRIVE or REVERSE when the vehicle is stopped or moving at low speeds.

FOUR WHEEL DRIVE

Jeep Active Drive (4WD) And Jeep Active Drive Low (4WD Low)

Your vehicle may be equipped with a Power Transfer Unit (PTU). This system is automatic with no driver inputs or additional driving skills required. Under normal driving conditions, the front wheels provide most of the traction. If the front wheels begin to lose traction, power is shifted automatically to the rear wheels. The greater the front wheel traction loss, the greater the power transfer to the rear wheels.

Additionally, on dry pavement under heavy throttle input (where one may have no wheel spin), torque will be sent to the rear in a preemptive effort to improve vehicle launch and performance characteristics.

CAUTION!

All wheels must have the same size and type tires. Unequal tire sizes must not be used. Unequal tire size may cause failure of the power transfer unit.

Four Wheel Drive (4x4)

The four wheel drive (4WD) is fully automatic in normal driving mode.

NOTE: It is not possible to carry out the change of mode when the vehicle exceeds the speed of 75 mph (120 km/h).

Enabling Four Wheel Drive (4x4)

The buttons for the activation of four wheel drive are located on the device Selec-Terrain and allow you to select the following:

- 4WD LOCK
- 4WD LOW — (Trailhawk models only)

Active Drive Control — If Equipped

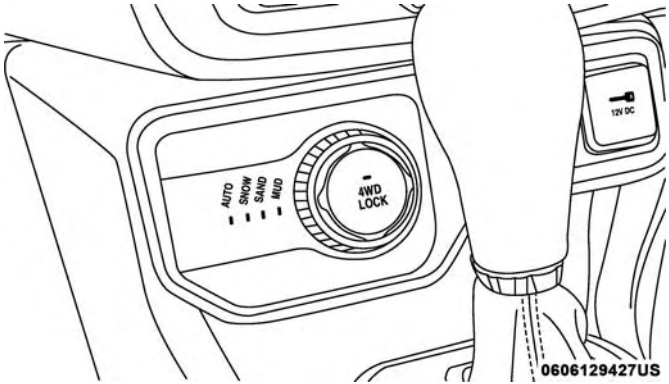

Selec-Terrain Switch

The Power Transfer Unit (PTU) is locked to ensure immediate availability of torque to the rear drive axles. This feature is selectable in AUTO mode and automatic in the other driving mode. 4WD LOCK can be enabled by the following ways:

- When the 4WD LOCK button is pushed.
- When the Selec-Terrain switch is rotated from AUTO to any other off-road modes.

Active Drive With Low Control — (Trailhawk Models Only)

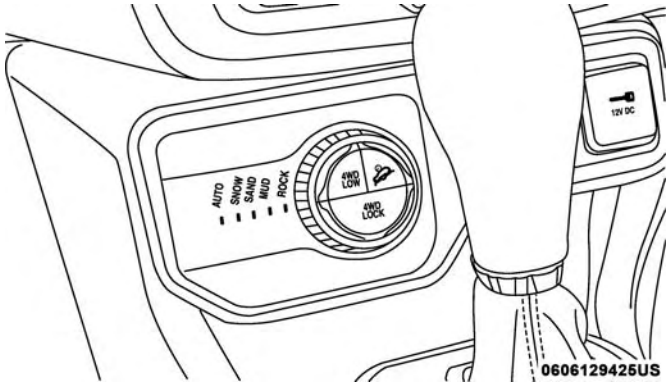

Selec-Terrain Switch (Trailhawk)

The 4WD LOW mode helps to improve the off-road performance in all modes. To enable 4WD Low, please follow the steps below:

Enabling 4WD LOW

With the vehicle stationary, the ignition in RUN mode or with the engine running, shift the transmission into NEUTRAL and push the button once 4WD LOW. The instrument cluster will display the message ″4WD LOW″ once the shift is complete.

NOTE:

- Both LOCK and LOW LEDs will blink and then become active on the Selec-Terrain switch until the shift is complete.
- The instrument cluster display will illuminate the "4WD Low" icon.

Disabling 4WD LOW

To disable the 4WD LOW mode, the vehicle must be stationary and the transmission shifted into NEUTRAL. Push the 4WD LOW button once.

SELEC-TERRAIN

Selec-Terrain combines the capabilities of the vehicle control systems, along with driver input, to provide the best performance for all terrains.

Mode Selection Guide

Rotate the Selec-Terrain knob to select the desired mode.

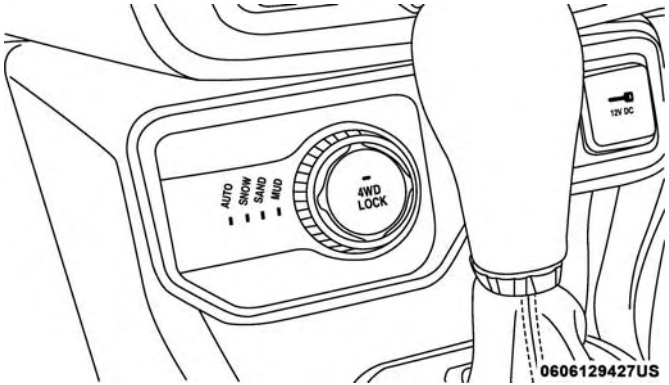

Selec-Terrain Switch

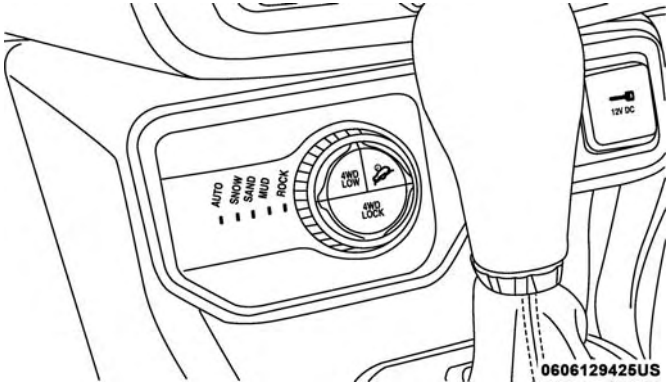

Selec-Terrain Switch (Trailhawk)

- **AUTO**: This four-wheel drive operation is a continuous operation, is fully automatic and can be used on and off road. This mode balances traction to ensure maneuverability and acceleration improvement compared to a vehicle with two wheel drive. This mode also reduces fuel consumption, since it allows the disconnect of the drive shaft where conditions permit.
- **SNOW**: This mode allows you to have greater stability under conditions of bad weather. It's used on and off road and on surfaces with poor traction, such as roads covered with snow. When in SNOW mode (depending on certain operating conditions), the transmission will use second gear (rather than first gear) during launches, to minimize wheel slippage, except for in 4–Low (Trailhawk models only).
- **SAND**: For off-road driving or use on surfaces with poor traction, such as sandy bottoms. The transmission is set to provide maximum traction. This mode allows more wheel spin and higher shift points to help motor through loose areas.
- **MUD**: For off-road driving or use on surfaces with poor traction, such as roads covered by mud or wet grass.
- **ROCK** (Trailhawk only): This mode is only available in 4WD LOW range. The device sets the vehicle to maximize traction and allow the highest steering capacity for off-road surfaces. This mode gives you the maximum performance off-road. Use for low speed obstacles such as large rocks, deep ruts, etc.

NOTE:

- Rock mode is only available on the vehicles equipped with the Trailhawk package.
- Activate the Hill Descent Control or Selec Speed Control for steep downhill control. Refer to "Electronic Brake Control System" in "Safety" for further information.

ACTIVE GRILLE SHUTTER — IF EQUIPPED

Your vehicle may be equipped with Active Grille Shutters, an automatic system with mobile flaps applied in front of the cooling module, whose automatic opening/closing movement aims at improving the vehicle aerodynamic efficiency and thus reducing consumption while ensuring optimal engine operating temperature conditions.

When a greater air flow is required for cooling (e.g. when driving in urban traffic) the flaps open, whereas when temperature is low or air flow is enough (example when driving on highways), the flaps close.

If there is a failure detected, the instrument panel will illuminate the engine check/malfunction indicator warning light.

POWER STEERING

The electric power steering system will give you good vehicle response and increased ease of maneuverability in tight spaces. The system will vary its assist to provide light efforts while parking and good feel while driving. If the electric steering system experiences a fault that reduces assist or prevents the vehicle from providing assist, you will still have the ability to steer the vehicle manually.

WARNING!

Continued operation with reduced assist could pose a safety risk to yourself and others. Service should be obtained as soon as possible.

If the "SERVICE POWER STEERING" OR "POWER STEERING ASSIST OFF - SERVICE SYSTEM" message and a steering wheel icon are displayed on the instrument cluster screen, it indicates that the vehicle needs to be taken to the dealer for service. It is likely the vehicle has lost power steering assistance. Refer to "Instrument Cluster Display" in "Getting To Know Your Instrument Panel" for further information.

NOTE:

- Even if the power steering assistance is no longer operational, it is still possible to steer the vehicle. Under these conditions there will be a substantial increase in steering effort, especially at low speeds and during parking maneuvers.
- If the condition persists, see an authorized dealer for service.

STOP/START SYSTEM

The Stop/Start function was developed to reduce fuel consumption. The system will stop the engine automatically during a vehicle stop if the required conditions are met. Releasing the brake pedal or pressing the accelerator pedal will automatically restart the engine.

Automatic Mode

The Stop/Start feature is enabled after every normal customer engine start. At that time, the system will go into STOP/START READY and if all other conditions are met, can go into a STOP/START AUTOSTOP ACTIVE "Autostop" mode.

To Activate The Autostop Mode, The Following Must Occur:

- The system must be in STOP/START READY state. A STOP/START READY message will be displayed in the instrument cluster display within the Stop/Start section. Refer to "Warning Lights And Messages" in "Getting To Know Your Instrument Panel" for further information.
- The vehicle must be completely stopped.
- The gear selector must be in a forward gear and the brake pedal depressed.

The engine will shut down, the tachometer will move to the zero position and the Stop/Start telltale will illuminate indicating you are in Autostop. Customer settings will be maintained upon return to an engine running condition.

Possible Reasons The Engine Does Not Autostop

Prior to engine shut down, the system will check many safety and comfort conditions to see if they are fulfilled. Detailed information about the operation of the Stop/Start system may be viewed in the instrument cluster display Stop/Start Screen. In the following situations the engine will not stop:

- Driver's seat belt is not buckled.
- Driver's door is not closed.
- Battery temperature is too warm or cold.
- Battery charge is low.
- The vehicle is on a steep grade.
- Cabin heating or cooling is in process and an acceptable cabin temperature has not been achieved.
- HVAC is set to full defrost mode at a high blower speed.
- HVAC set to MAX A/C.
- Engine has not reached normal operating temperature.

- The transmission is not in a forward gear.
- Hood is open.
- Vehicle is in 4LO transfer case mode (if equipped with 4WD).
- Brake pedal is not pressed with sufficient pressure with vehicle in DRIVE position.

Other Factors Which Can Inhibit Autostop Include:

- Accelerator pedal input.
- Engine temp too high.
- 5 mph threshold not achieved from previous AUTOSTOP.
- Steering angle beyond threshold.

It may be possible for the vehicle to be driven several times without the STOP/START system going into a STOP/START READY state under more extreme conditions of the items listed above.

To Start The Engine While In Autostop Mode

While in a forward gear, the engine will start when the brake pedal is released or the throttle pedal is depressed. The transmission will automatically re-engage upon engine restart.

Conditions That Will Cause The Engine To Start Automatically While In Autostop Mode:

- The transmission gear selector is moved out of DRIVE except in the PARK and NEUTRAL position.
- To maintain cabin temperature comfort.
- HVAC is set to full defrost mode.
- HVAC system temperature or fan speed is manually adjusted.
- Battery voltage drops too low.
- Low brake vacuum (e.g. after several brake pedal applications).
- STOP/START OFF switch is pushed.
- A STOP/START system error occurs.
- 4WD system is put into 4LO mode (if equipped with 4WD).

Conditions That Force An Application Of The Electric Park Brake While In Autostop Mode:

- The driver's door is open and brake pedal released.
- The driver's door is open and the driver's seat belt is unbuckled.
- The engine hood has been opened.
- A STOP/START system error occurs.

If the Electric Park Brake is applied with the engine off, the engine may require a manual restart and the electric park brake may require a manual release (depress brake pedal and push Electric Park Brake switch). Refer to "Instrument Cluster Display" in "Getting To Know Your Instrument Panel" for further information.

To Manually Turn Off The Stop/Start System

1. Push the STOP/START Off switch (located on the switch bank). The light on the switch will illuminate.

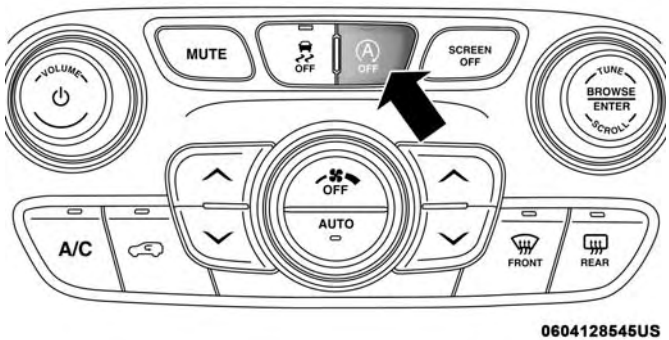

STOP/START OFF Switch

2. The "STOP/START OFF" message will appear in the instrument cluster display. Refer to "Warning Lights And Messages" in "Getting To Know Your Instrument Panel" for further information.
3. At the next vehicle stop (after turning off the STOP/START system), the engine will not be stopped.
4. The STOP/START system will reset itself back to the ON mode every time the ignition is turned off and back on.

To Manually Turn On The Stop/Start System

Push the STOP/START Off switch (located on the switch bank). The light on the switch will turn off.

System Malfunction

If there is a malfunction in the STOP/START system, the system will not shut down the engine. A "SERVICE STOP/START SYSTEM" message will appear in the instrument cluster display. Refer to "Warning Lights And Messages" in "Getting To Know Your Instrument Panel" for further information.

If the "SERVICE STOP/START SYSTEM" message appears in the instrument cluster display, have the system checked by your authorized dealer.

SPEED CONTROL — IF EQUIPPED

When engaged, the Speed Control takes over accelerator operations at speeds greater than 20 mph (40 km/h).

The Speed Control buttons are located on the right side of the steering wheel.

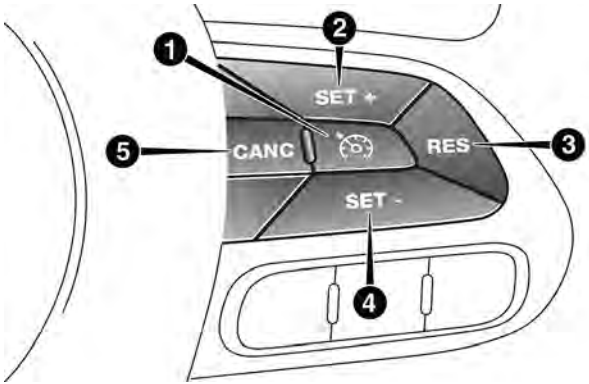

Speed Control Buttons

1 — On/Off
2 — SET (+)/Accel
3 — RES/Resume
4 — SET (-)/Decel
5 — CANC/Cancel

NOTE:

- In order to ensure proper operation, the Speed Control System has been designed to shut down if multiple Speed Control functions are operated at the same time. If this occurs, the Speed Control System can be reactivated by pushing the Speed Control on/off button and resetting the desired vehicle set speed.
- The Speed Control function will not work in 4WD Low Range.

Activation

Push the on/off button to activate the Speed Control. The Cruise Indicator Light in the instrument cluster display will illuminate. To turn the system off, push the on/off button a second time. The Cruise Indicator Light will turn off. The system should be turned off when not in use.

WARNING!

Leaving the Speed Control system on when not in use is dangerous. You could accidentally set the system or cause it to go faster than you want. You could lose control and have an accident. Always leave the system off when you are not using it.

Setting A Desired Speed

Turn the Speed Control on.

NOTE: The vehicle should be traveling at a steady speed and on level ground before pushing the SET (+) or SET (-) button.

When the vehicle has reached the desired speed, push the SET (+) or SET (-) button and release. Release the accelerator and the vehicle will operate at the selected speed.

Varying The Speed

To Increase Speed

When the Speed Control is set, you can increase speed by pushing the SET **(+)** button.

The driver's preferred units can be selected through the instrument panel settings. Refer to "Instrument Cluster Display" in "Getting To Know Your Instrument Panel" for more information. The speed increment shown is dependant on the chosen speed unit of U.S. (mph) or Metric (km/h):

U.S. Speed (mph)

- Pushing the SET **(+)** button once will result in a 1 mph increase in set speed. Each subsequent tap of the button results in an increase of 1 mph.

- If the button is continually pushed, the set speed will continue to increase until the button is released, then the new set speed will be established.

Metric Speed (km/h)

- Pushing the SET **(+)** button once will result in a 1 km/h increase in set speed. Each subsequent tap of the button results in an increase of 1 km/h.
- If the button is continually pushed, the set speed will continue to increase until the button is released, then the new set speed will be established.

To Decrease Speed

When the Speed Control is set, you can decrease speed by pushing the SET **(-)** button.

The driver's preferred units can be selected through the instrument panel settings. Refer to "Instrument Cluster Display" in "Getting To Know Your Instrument Panel" for further information. The speed increment shown is dependant on the chosen speed unit of U.S. (mph) or Metric (km/h):

U.S. Speed (mph)

- Pushing the SET **(-)** button once will result in a 1 mph decrease in set speed. Each subsequent tap of the button results in a decrease of 1 mph.
- If the button is continually pushed, the set speed will continue to decrease until the button is released, then the new set speed will be established.

Metric Speed (km/h)

- Pushing the SET **(-)** button once will result in a 1 km/h decrease in set speed. Each subsequent tap of the button results in a decrease of 1 km/h.
- If the button is continually pushed, the set speed will continue to decrease until the button is released, then the new set speed will be established.

Accelerating For Passing

Press the accelerator as you would normally. When the pedal is released, the vehicle will return to the set speed.

Resume Speed

To resume a previously set speed, push the RES button and release. Resume can be used at any speed above 20 mph (32 km/h).

Deactivation

A soft tap on the brake pedal, pushing the CANC button, or normal brake pressure while slowing the vehicle will deactivate the Speed Control without erasing the set speed from memory.

Pushing the on/off button or placing the ignition to OFF erases the set speed from memory.

ADAPTIVE CRUISE CONTROL (ACC) — IF EQUIPPED

Adaptive Cruise Control (ACC) increases the driving convenience provided by cruise control while traveling on highways and major roadways. However, it is not a safety system and not designed to prevent collisions. **Speed Control function performs differently. Please refer to the proper section within this chapter.**

ACC will allow you to keep cruise control engaged in light to moderate traffic conditions without the constant need to reset your cruise control. ACC utilizes a radar sensor and a forward facing camera designed to detect a vehicle directly ahead of you.

NOTE:

- If the sensor does not detect a vehicle ahead of you, ACC will maintain a fixed set speed.
- If the ACC sensor detects a vehicle ahead, ACC will apply limited braking or acceleration (not to exceed the original set speed) automatically to maintain a preset following distance, while matching the speed of the vehicle ahead.

The Cruise Control system has two control modes:

- Adaptive Cruise Control mode for maintaining an appropriate distance between vehicles.
- Normal (Fixed Speed) Cruise Control mode for cruising at a constant preset speed. For additional information, refer to “Normal (Fixed Speed) Cruise Control Mode” in this section.

NOTE: Normal (Fixed Speed) Cruise Control will not react to preceding vehicles. Always be aware of the mode selected.

You can change the mode by using the cruise control buttons. The two control modes function differently. Always confirm which mode is selected.

WARNING!

- Adaptive Cruise Control (ACC) is a convenience system. It is not a substitute for active driving involvement. It is always the driver's responsibility to be attentive of road, traffic, and weather conditions, vehicle speed, distance to the vehicle ahead; and, most importantly, brake operation to ensure safe operation of the vehicle under all road conditions. Your complete attention is always required while driving to maintain safe control of your vehicle. Failure to follow these warnings can result in a collision and death or serious personal injury.
- The ACC system:
  - Does not react to pedestrians, oncoming vehicles, and stationary objects (e.g., a stopped vehicle in a traffic jam or a disabled vehicle).
  - Cannot take street, traffic, and weather conditions into account, and may be limited upon adverse sight distance conditions.
  - Does not always fully recognize complex driving conditions, which can result in wrong or missing distance warnings.

(Continued)

WARNING! *(Continued)*

You should turn the ACC system off:

- When driving in fog, heavy rain, heavy snow, sleet, heavy traffic, and complex driving situations (i.e., in highway construction zones).
- When entering a turn lane or highway off ramp; when driving on roads that are winding, icy, snow-covered, slippery, or have steep uphill or downhill slopes.
- When towing a trailer up or down steep slopes.
- When circumstances do not allow safe driving at a constant speed.

Adaptive Cruise Control (ACC) Operation

The speed control buttons (located on the right side of the steering wheel) operate the ACC system.

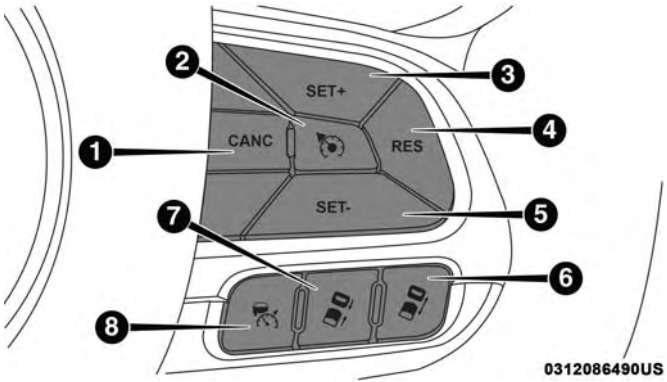

Speed Control Buttons

1 — CANC/Cancel
2 — Normal (Fixed Speed) Cruise Control On/Off
3 — SET (+)/Accel
4 — RES/Resume
5 — SET (-)/Decel
6 — Distance Setting — Increase
7 — Distance Setting — Decrease
8 — Adaptive Cruise Control (ACC) On/Off

NOTE: Any chassis/suspension or tire size modifications to the vehicle will effect the performance of the Adaptive Cruise Control and Forward Collision Warning System.

To Activate/Deactivate

Push and release the Adaptive Cruise Control (ACC) on/off button. The ACC menu in the instrument cluster display will read "ACC Ready."

Adaptive Cruise Control Ready

To turn the system off, push and release the Adaptive Cruise Control (ACC) on/off button again. At this time, the system will turn off and the instrument cluster display will read "Adaptive Cruise Control (ACC) Off."

Adaptive Cruise Control Off

WARNING!

Leaving the Adaptive Cruise Control (ACC) system on when not in use is dangerous. You could accidentally set the system or cause it to go faster than you want. You could lose control and have a collision. Always leave the system off when you are not using it.

Activating Adaptive Cruise Control (ACC)

The minimum set speed for the ACC system is 20 mph (32 km/h).

When the system is turned on and in the ready state, the instrument cluster display will read "ACC Ready."

When the system is off, the instrument cluster display will read "Adaptive Cruise Control (ACC) Off."

NOTE: You cannot engage ACC under the following conditions:

- When in Four-Wheel Drive Low.
- When you apply the brakes.
- When the parking brake is applied.
- When the automatic transmission is in PARK, REVERSE or NEUTRAL.
- When the vehicle speed is outside of the speed range.
- When the brakes are overheated.
- When driver switches ESC to full-off mode.

To Set A Desired ACC Speed

When the vehicle reaches the speed desired, push the SET **(+)** button or the SET **(-)** button and release. The instrument cluster display will show the set speed.

NOTE: ACC cannot be set if there is a stationary vehicle in front of your vehicle in close proximity.

Remove your foot from the accelerator pedal. If you do not, the vehicle may continue to accelerate beyond the set speed. If this occurs:

- The message "Adaptive Cruise Control Override" will display in the instrument cluster display.
- The system will not be controlling the distance between your vehicle and the vehicle ahead. The vehicle speed will only be determined by the position of the accelerator pedal.

To Cancel

The following conditions cancel the system:

- The brake pedal is applied.
- The CANC button is pushed.
- An Anti-Lock Brake System (ABS) event occurs.
- The gear selector is removed from the Drive position.
- The braking temperature exceeds normal range (overheated).
- The Electronic Stability Control/Traction Control System (ESC/TCS) activates.
- The vehicle parking brake is applied.
- The driver switches ESC to full-off mode.
- Manual transmission is not in a forward gear, if equipped.
- Manual transmission is in NEUTRAL or clutch pressed down for a fixed amount of time, if equipped.

To Turn Off

The system will turn off and clear the set speed in memory if:

- The Adaptive Cruise Control (ACC) on/off button is pushed.
- The Normal (Fixed Speed) Cruise Control on/off button is pushed.
- The ignition is turned OFF.
- You switch to Four-Wheel Drive Low.

To Resume

If there is a set speed in the memory, push the RES button and then remove your foot from the accelerator pedal. The instrument cluster display will show the last set speed.

WARNING!

The Resume function should only be used if traffic and road conditions permit. Resuming a set speed that is too high or too low for prevailing traffic and road conditions could cause the vehicle to accelerate or decelerate too sharply for safe operation. Failure to follow these warnings can result in a collision and death or serious personal injury.

To Vary The Speed Setting

To Increase Speed

While ACC is set, you can increase the set speed by pushing the SET **(+)** button.

The driver's preferred units can be selected through the instrument panel settings if equipped. Refer to "Getting To Know Your Instrument Panel" for more information. The speed increment shown is dependant on the chosen speed unit of U.S. (mph) or Metric (km/h):

U.S. Speed (mph)

- Pushing the SET **(+)** button once will result in a 1 mph increase in set speed. Each subsequent tap of the button results in an increase of 1 mph.
- If the button is continually pushed, the set speed will continue to increase in 5 mph increments until the button is released. The increase in set speed is reflected in the instrument cluster display.

Metric Speed (km/h)

- Pushing the SET **(+)** button once will result in a 1 km/h increase in set speed. Each subsequent tap of the button results in an increase of 1 km/h.
- If the button is continually pushed, the set speed will continue to increase in 5 km/h increments until the button is released. The increase in set speed is reflected in the instrument cluster display.

To Decrease Speed

While ACC is set, the set speed can be decreased by pushing the SET **(-)** button.

The driver's preferred units can be selected through the instrument panel settings if equipped. Refer to "Getting To Know Your Instrument Panel" for more information. The speed decrement shown is dependant on the chosen speed unit of U.S. (mph) or Metric (km/h):

U.S. Speed (mph)

- Pushing the SET **(-)** button once will result in a 1 mph decrease in set speed. Each subsequent tap of the button results in a decrease of 1 mph.
- If the button is continually pushed, the set speed will continue to decrease in 5 mph decrements until the button is released. The decrease in set speed is reflected in the instrument cluster display.

Metric Speed (km/h)

- Pushing the SET **(-)** button once will result in a 1 km/h decrease in set speed. Each subsequent tap of the button results in a decrease of 1 km/h.
- If the button is continually pushed, the set speed will continue to decrease in 5 km/h decrements until the button is released. The decrease in set speed is reflected in the instrument cluster display.

NOTE:

- When you override and push the SET **(+)** button or SET **(-)** buttons, the new set speed will be the current speed of the vehicle.
- When you use the SET **(-)** button to decelerate, if the engine's braking power does not slow the vehicle sufficiently to reach the set speed, the brake system will automatically slow the vehicle.
- If equipped with a manual transmission, it is possible to make gear changes during the normal operation of ACC that will allow the driver to engage the appropriate gear with respect the set speed in order to keep the feature activated. It is canceled when the clutch pedal is held down, or when placing the gearbox in NEUTRAL for a certain maximum time.
- If equipped with an automatic transmission, ACC systems could automatically downshift to a lower gear when driving down hill or during accelerations. Therefore, a slight speed change on moderate hills is normal. This is normal and necessary to maintain the set speed. When driving up hill and down hill, the ACC system will cancel if the braking temperature exceeds normal range (overheated).

Setting The Following Distance In ACC

The specified following distance for ACC can be set by varying the distance setting between four bars (longest), three bars (long), two bars (medium) and one bar (short). Using this distance setting and the vehicle speed, ACC calculates and sets the distance to the vehicle ahead. This distance setting will show in the instrument cluster display.

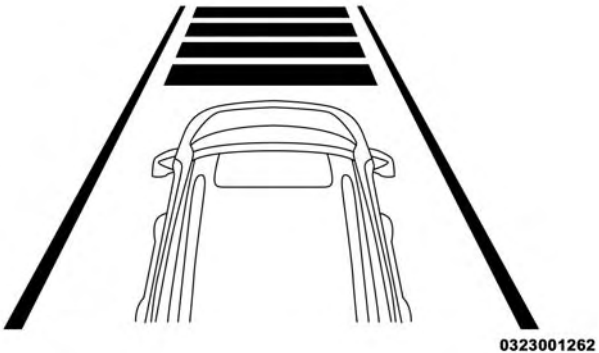

Distance Setting 4 Bars (Longest)

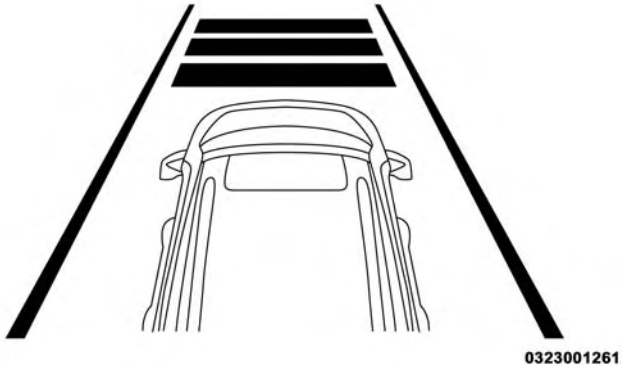

Distance Setting 3 Bars (Long)

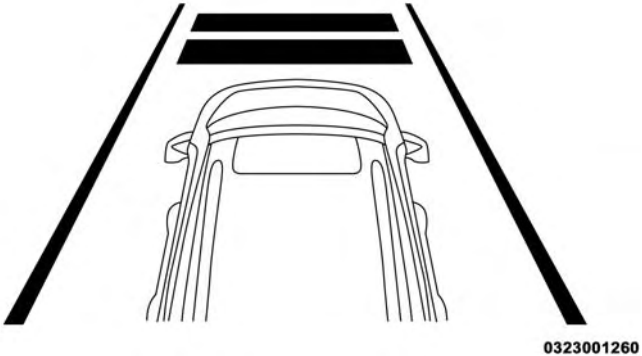

Distance Setting 2 Bars (Medium)

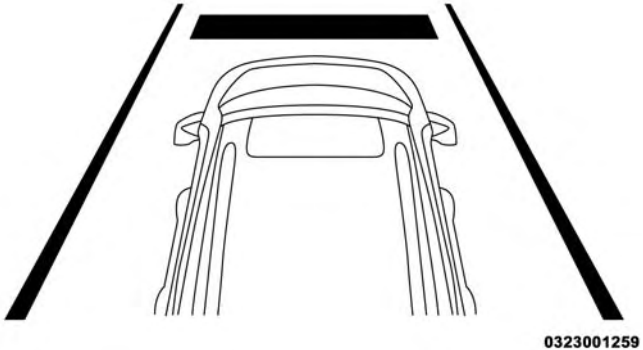

Distance Setting 1 Bar (Short)

To increase the distance setting, push the Distance Setting — Increase button and release. Each time the button is pushed, the distance setting increases by one bar (longer). Once the longest setting is reached, if the button is pushed again it will be set to the shortest setting available.

If there is no vehicle ahead, the vehicle will maintain the set speed. If a slower moving vehicle is detected in the same lane, the instrument cluster display will show the “Sensed Vehicle Indicator” icon, and the system adjusts vehicle speed automatically to maintain the distance setting, regardless of the set speed.

The vehicle will then maintain the set distance until:

- The vehicle ahead accelerates to a speed above the set speed.
- The vehicle ahead moves out of your lane or view of the sensor.
- The distance setting is changed.
- The system disengages. (Refer to the information on ACC Activation).

The maximum braking applied by ACC is limited; however, the driver can always apply the brakes manually, if necessary.

NOTE: The brake lights will illuminate whenever the ACC system applies the brakes.

A Proximity Warning will alert the driver if ACC predicts that its maximum braking level is not sufficient to maintain the set distance. If this occurs, a visual alert "BRAKE!" will appear in the instrument cluster display and a chime will sound while ACC continues to apply its maximum braking capacity.

Brake Alert

NOTE: The "Brake!" Screen in the instrument cluster display is a warning for the driver to take action and does not necessarily mean that the Forward Collision Warning system is applying the brakes autonomously.

Overtake Aid

When driving with ACC engaged and following a vehicle, the system will provide an additional acceleration up to the ACC set speed to assist in passing the vehicle. This additional acceleration is triggered when the driver utilizes the left turn signal and will only be active when passing on the left hand side.

Adaptive Cruise Control (ACC) Menu

The instrument cluster display shows the current ACC system settings. The instrument cluster display is located in the center of the instrument cluster. The information it displays depends on ACC system status.

Push the Adaptive Cruise Control (ACC) on/off button (located on the steering wheel) until one of the following shows in the instrument cluster display:

Adaptive Cruise Control Off

When ACC is deactivated, the display will read "Adaptive Cruise Control Off."

Adaptive Cruise Control Ready

When ACC is activated but the vehicle speed setting has not been selected, the display will read "Adaptive Cruise Control Ready."

Push the SET (+) or the SET (-) button (located on the steering wheel) and the following will read in the instrument cluster display:

ACC SET

When ACC is set, the set speed will appear in the instrument cluster display.

The ACC screen may display once again if any ACC activity occurs, which may include any of the following:

- System Cancel
- Driver Override
- System Off
- ACC Proximity Warning
- ACC Unavailable Warning
- The instrument cluster display will return to the last display selected after five seconds of no ACC display activity

Display Warnings And Maintenance

"Front Radar Sensor Temporarily Blocked" Warning

The "ACC Front Radar Sensor Temporarily Blocked" warning will display and also a chime will indicate when conditions temporarily limit system performance.

This most often occurs at times of poor visibility, such as in snow or heavy rain. The ACC system may also become temporarily blinded due to obstructions, such as mud, dirt or ice. In these cases, the instrument cluster display will read "ACC Front Radar Sensor Temporarily Blocked" and the system will deactivate.

The "ACC Front Radar Sensor Temporarily Blocked" message can sometimes be displayed while driving in highly reflective areas (i.e. tunnels with reflective tiles, or ice and snow). The ACC system will recover after the vehicle has left these areas. Under rare conditions, when the radar is not tracking any vehicles or objects in its path this warning may temporarily occur.

NOTE: If the "ACC Front Radar Sensor Temporarily Blocked" warning is active Normal (Fixed Speed) Cruise Control is still available. For additional information refer to "Normal (Fixed Speed) Cruise Control Mode" in this section.

If weather conditions are not a factor, the driver should examine the sensor. It may require cleaning or removal of an obstruction. The sensor is located in the center of the bumper.

To keep the ACC System operating properly, it is important to note the following maintenance items:

- Always keep the sensor clean. Carefully wipe the sensor lens with a soft cloth. Be cautious not to damage the sensor lens.
- Do not use solvents or abrasive pastes. The radar is equipped with a defrost system, so in some climatic conditions it could reach high temperatures. Wait at least 30 seconds after the engine has been cycled to OFF before touching the sensor.
- Do not remove any screws from the sensor. Doing so could cause an ACC system malfunction or failure and require a sensor realignment.
- If the sensor or front end of the vehicle is damaged due to a collision, see your authorized dealer for service.
- Do not attach or install any accessories near the sensor, including transparent material. Doing so could cause an ACC system failure or malfunction.

When the condition that deactivated the system is no longer present, the system will return to the "Adaptive Cruise Control Off" state and will resume function by simply reactivating it.

NOTE:

- If the "ACC Front Radar Sensor Temporarily Blocked" message occurs frequently (e.g. more than once on every trip) without any snow, rain, mud, or other obstruction, have the radar sensor realigned at your authorized dealer.
- Installing a snow plow or front-end protector is not recommended. Doing so may block the sensor and inhibit ACC/FCW operation.

"Clean Front Windshield" Warning

The "ACC/FCW Limited Functionality Wipe Front Windshield" warning will display to indicate when conditions temporarily limit system performance. This most often occurs at times of poor visibility, such as in snow or heavy rain and fog. The ACC system may also become temporarily blinded due to obstructions, such as mud, dirt, or ice on windshield and fog on the inside of glass. In these cases, the instrument cluster display will read "ACC/FCW Limited Functionality Wipe Front Windshield" and the system will have degraded performance.

The "ACC/FCW Limited Functionality Wipe Front Windshield" message can sometimes be displayed while driving in adverse weather conditions. The ACC/FCW system will recover after the vehicle has left these areas. Under rare conditions, when the camera is not tracking any vehicles or objects in its path this warning may temporarily occur.

If weather conditions are not a factor, the driver should examine the windshield and the camera located on the back side of the inside rear view mirror. They may require cleaning or removal of an obstruction.

When the condition that created limited functionality is no longer present, the system will return to full functionality.

NOTE: If the "ACC/FCW Limited Functionality Wipe Front Windshield" message occurs frequently (e.g. more than once on every trip) without any snow, rain, mud, or other obstruction, have the windshield and forward facing camera inspected at your authorized dealer.

Service ACC/FCW Warning

If the system turns off, and the instrument cluster display reads "ACC/FCW Limited Functionality Frontal Camera Service Required", "Cruise Control Service Required", or "Cruise Control Temporarily Unavailable", there may be an internal system fault or a temporary malfunction that limits ACC functionality. Although the vehicle is still drivable under normal conditions, ACC will be temporarily unavailable. If this occurs, try activating ACC again later, following an ignition cycle. If the problem persists, see your authorized dealer.

Precautions While Driving With ACC

In certain driving situations, ACC may have detection issues. In these cases, ACC may brake late or unexpectedly. The driver needs to stay alert and may need to intervene.

Towing A Trailer

Towing a trailer is not advised when using ACC.

Offset Driving

ACC may not detect a vehicle in the same lane that is offset from your direct line of travel, or a vehicle merging in from a side lane. There may not be sufficient distance to the vehicle ahead. The offset vehicle may move in and out of the line of travel, which can cause your vehicle to brake or accelerate unexpectedly.

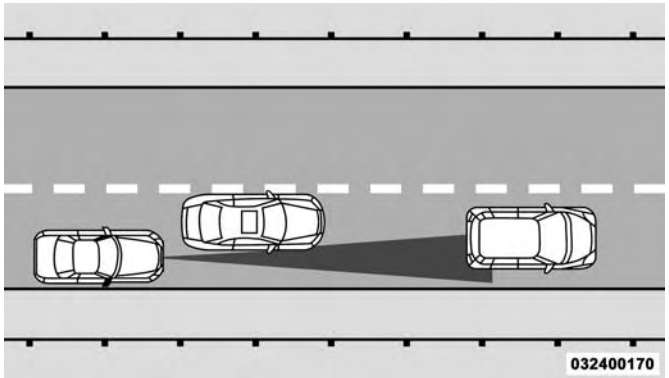

Offset Driving Condition Example

Turns And Bends

When driving on a curve with ACC engaged, the system may decrease the vehicle speed and acceleration for stability reasons, with no target vehicle detected. Once the vehicle is out of the curve the system will resume your original set speed. This is a part of normal ACC system functionality.

NOTE: On tight turns ACC performance may be limited.

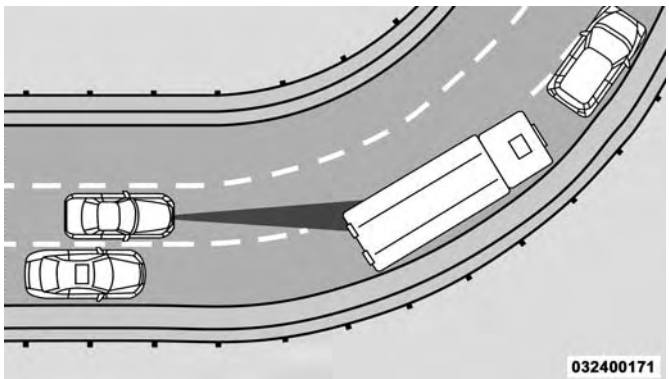

Turn Or Bend Example

Using ACC On Hills

When driving on hills, ACC may not detect a vehicle in your lane. Depending on the speed, vehicle load, traffic conditions, and the steepness of the hills, ACC performance may be limited.

ACC Hill Example

Lane Changing

ACC may not detect a vehicle until it is completely in the lane in which you are traveling. In the illustration shown, ACC has not yet detected the vehicle changing lanes and it may not detect the vehicle until it's too late for the ACC system to take action. ACC may not detect a vehicle until it is completely in the lane. There may not be sufficient distance to the lane-changing vehicle. Always be attentive and ready to apply the brakes if necessary.

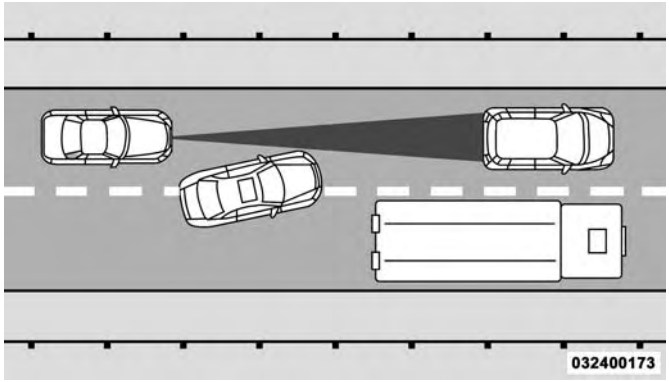

Lane Changing Example

Narrow Vehicles

Some narrow vehicles traveling near the outer edges of the lane or edging into the lane are not detected until they have moved fully into the lane. There may not be sufficient distance to the vehicle ahead.

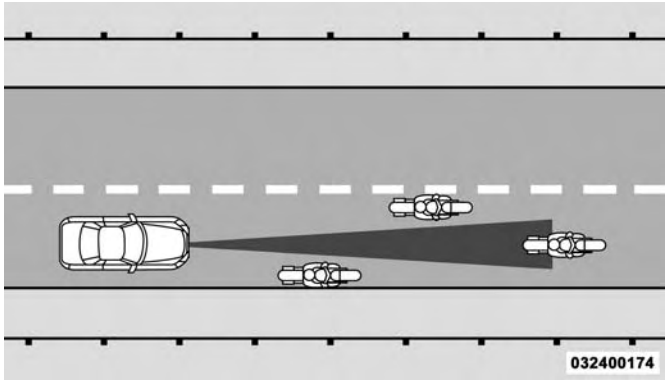

Narrow Vehicle Example

Stationary Objects And Vehicles

ACC does not react to stationary objects and stationary vehicles. For example, ACC will not react in situations where the vehicle you are following exits your lane and the vehicle ahead is stopped in your lane. Always be attentive and ready to apply the brakes if necessary.

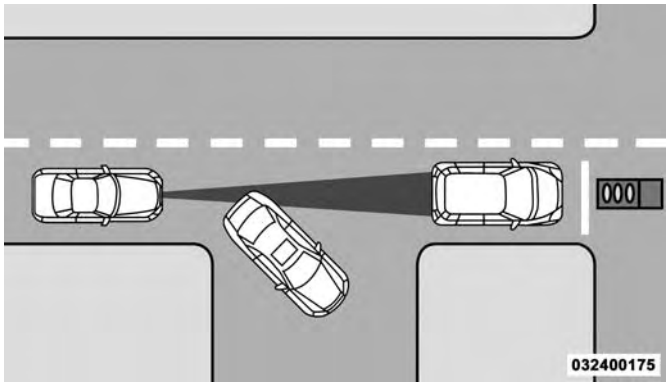

Stationary Object And Stationary Vehicle Example

General Information

The following regulatory statement applies to all Radio Frequency (RF) devices equipped in this vehicle:

This device complies with Part 15 of the FCC Rules and with Industry Canada license-exempt RSS standard(s). Operation is subject to the following two conditions:

1. This device may not cause harmful interference.
2. This device must accept any interference received, including interference that may cause undesired operation.

NOTE: Changes or modifications not expressly approved by the party responsible for compliance could void the user's authority to operate the equipment.

Changes or modifications to any of these systems by other than an authorized service facility could void authorization to use this equipment.

Normal (Fixed Speed) Cruise Control Mode

In addition to Adaptive Cruise Control mode, a Normal (Fixed Speed) Cruise Control mode is available for cruising at fixed speeds. The Normal (Fixed Speed) Cruise Control mode is designed to maintain a set cruising speed without requiring the driver to operate the accelerator. Speed Control can only be operated if the vehicle speed is above 20 mph (32 km/h).

To change between the different control modes, push the Adaptive Cruise Control (ACC) on/off button which turns the ACC on and the Normal (Fixed Speed) Cruise Control off. Pushing of the Normal (Fixed Speed) Cruise Control on/off button will result in turning on (changing to) the Normal (Fixed Speed) Cruise Control mode.

WARNING!

In the Normal (Fixed Speed) Cruise Control mode, the system will not react to vehicles ahead. In addition, the proximity warning does not activate and no alarm will sound even if you are too close to the vehicle ahead since neither the presence of the vehicle ahead nor the vehicle-to-vehicle distance is detected. Be sure to maintain a safe distance between your vehicle and the vehicle ahead. Always be aware which mode is selected.

To Set A Desired Speed

Turn the Normal (Fixed Speed) Cruise Control on. When the vehicle has reached the desired speed, push the SET (+) or SET (-) button and release. Release the accelerator and the vehicle will operate at the selected speed. Once a speed has been set a message (CRUISE CONTROL SET TO MPH/km/h) will appear indicating what speed was set. This light will turn on when the speed control is set.

To Vary The Speed Setting

To Increase Speed

When the Normal (Fixed Speed) Cruise Control is set, you can increase speed by pushing the SET **(+)** button.

The driver's preferred units can be selected through the instrument panel settings. Refer to "Instrument Cluster Display" in "Getting To Know Your Instrument Panel" for more information. The speed increment shown is dependant on the speed of U.S. (mph) or Metric (km/h) units:

U.S. Speed (mph)

- Pushing the SET **(+)** button once will result in a 1 mph increase in set speed. Each subsequent tap of the button results in an increase of 1 mph.
- If the button is continually pushed, the set speed will continue to increase in 5 mph increments until the button is released. The increase in set speed is reflected in the instrument cluster display.

Metric Speed (km/h)

- Pushing the SET **(+)** button once will result in a 1 km/h increase in set speed. Each subsequent tap of the button results in an increase of 1 km/h.
- If the button is continually pushed, the set speed will continue to increase in 5 km/h increments until the button is released. The increase in set speed is reflected in the instrument cluster display.

To Decrease Speed

When the Normal (Fixed Speed) Cruise Control is set, you can decrease speed by pushing the SET **(-)** button.

The driver's preferred units can be selected through the instrument panel settings. Refer to "Instrument Cluster Display" in "Getting To Know Your Instrument Panel" for more information. The speed decrement shown is dependant on the speed of U.S. (mph) or Metric (km/h) units:

U.S. Speed (mph)

- Pushing the SET **(-)** button once will result in a 1 mph decrease in set speed. Each subsequent tap of the button results in a decrease of 1 mph.
- If the button is continually pushed, the set speed will continue to decrease in 5 mph decrements until the button is released. The decrease in set speed is reflected in the instrument cluster display.

Metric Speed (km/h)

- Pushing the SET **(-)** button once will result in a 1 km/h decrease in set speed. Each subsequent tap of the button results in a decrease of 1 km/h.
- If the button is continually pushed, the set speed will continue to decrease in 5 km/h decrements until the button is released. The decrease in set speed is reflected in the instrument cluster display.

To Cancel

The following conditions will cancel the Normal (Fixed Speed) Cruise Control without clearing the memory:

- The brake pedal is applied.
- The CANC button is pushed.
- The Electronic Stability Control/Traction Control System (ESC/TCS) activates.
- The vehicle parking brake is applied.
- The braking temperature exceeds normal range (overheated).
- The gear selector is removed from the DRIVE position.
- Manual transmission is not in a forward gear, if equipped.
- Manual transmission is in NEUTRAL or clutch pressed down, if equipped.
- The driver switches ESC to full-off mode.

To Resume Speed

To resume a previously set speed, push the RES button and release. Resume can be used at any speed above 20 mph (32 km/h).

To Turn Off

The system will turn off and erase the set speed in memory if:

- The Normal (Fixed Speed) Cruise Control on/off button is pushed.
- The ignition is turned OFF.
- You engage Four-Wheel Drive Low.
- The Adaptive Cruise Control (ACC) on/off button is pushed.

REAR PARKSENSE — IF EQUIPPED

The Rear ParkSense system provides visual and audible indications of the distance between the rear fascia and a detected obstacle when backing up, e.g. during a parking maneuver. Refer to "ParkSense System Usage Precautions" for limitations of this system and recommendations.

Rear ParkSense will retain the last system state (enabled or disabled) from the last ignition cycle when the ignition is changed to the RUN position.

Rear ParkSense can be active only when the gear selector is in REVERSE.

Rear ParkSense Sensors

The four Rear ParkSense sensors, located in the rear fascia/bumper, monitor the area behind the vehicle that is within the sensors' field of view. The sensors can detect obstacles from approximately 12 inches (30 cm) up to 59 inches (150 cm) from the rear fascia/bumper in the horizontal direction, depending on the location, type and orientation of the obstacle.

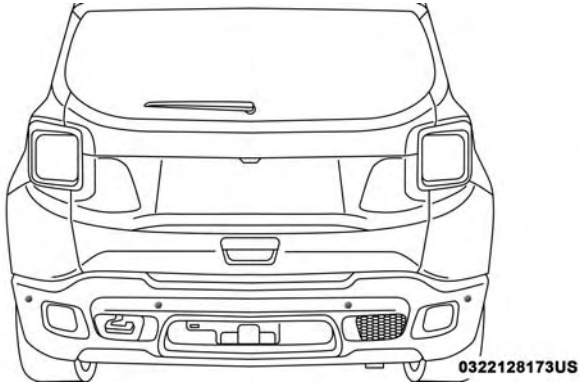

Parking Sensors

Chime

By shifting the vehicle in REVERSE and in the case of the presence of a rear obstacle, an acoustic signal that varies with the distance of the obstacle from the bumper is activated.

The frequency of the acoustic signal:

- Increases with the distance between vehicle and object decreases.
- Becomes continuous when the distance that separates the vehicle from the obstacle is less than approximately 12 inches (30 cm), while terminates immediately if the distance to the obstacle increases.
- Remains constant if the distance between vehicle and obstacle remains unchanged. If this situation occurs for the external sensors, the signal is stopped after approximately three seconds to avoid, for example, it activates in case of maneuver along a wall.

When the system emits a beeping sound, the volume of the Uconnect system, if turned on, is automatically lowered by Rear ParkSense.

Detection Distances

If the sensors detect more obstacles, it is taken into account only what is the shorter distance.

Instrument Cluster Display

Rear ParkSense is displayed on the instrument cluster only if you have selected "Sound and Display" within the "Safety And Driving Assistance" menu of the Uconnect system.

If an obstacle is detected in the center rear region, the display will show a single solid arc in the center rear region and will produce a one-half second tone. As the vehicle moves closer to the obstacle, the display will show the single arc moving closer to the vehicle and the sound tone will change from slow, to fast, to continuous.

If an obstacle is detected in the left and/or right rear region, the display will show a single flashing arc in the left and/or right rear region and will produce a fast sound tone. As the vehicle moves closer to the obstacle, the display will show the single arc moving closer to the vehicle and the tone will change from fast to continuous.

In general, the vehicle is closest to the obstacle when the display shows only a flashing arc and the chime becomes continuous.

The color on the display depends on the distance and location of the obstacle.

Enabling And Disabling Rear ParkSense

ParkSense can be enabled and disabled with the ParkSense switch.

When the Rear ParkSense switch is pushed to disable the system, the instrument cluster display will show a message such as “PARKSENSE DISABLED” for approximately five seconds. Refer to “Instrument Cluster Display” in “Getting To Know Your Instrument Panel” for further information.

The Rear ParkSense switch LED turns ON when the system is disabled by pressing the switch, as well as in case of failure or temporary disabling conditions. The Rear ParkSense switch LED will be off when the system is enabled. If the Rear ParkSense switch is pushed, and requires service, the Rear ParkSense switch LED will blink momentarily, and then the LED will be on.

Rear ParkSense will remember the previous state when the vehicle is switch off.

CAUTION!

After turning OFF the ignition, the Rear ParkSense remains in this setting until the next ignition cycle, even in the case of changing the setting of starting RUN to OFF and then again in RUN.

Operation With A Trailer

The operation of the rear sensors is automatically deactivated when the trailer’s electric plug is inserted in the vehicle’s tow hook socket. In this situation, the ParkSense Switch LED turns on.

The rear sensors are automatically reactivated when the trailer’s cable plug is removed.

Service The Rear ParkSense System

During vehicle start up, when the Rear ParkSense System has detected a faulted condition, the instrument cluster will actuate a single chime, once per ignition cycle, and it will display a message such as “PARKSENSE UNAVAILABLE WIPE REAR SENSORS” or the “PARKSENSE UNAVAILABLE SERVICE REQUIRED”. Refer to “Instrument Cluster Display” for further information. When the gear selector is moved to REVERSE and the system has detected a faulted condition, the instrument cluster display will show a message such as ″PARKSENSE UNAVAILABLE WIPE REAR SENSORS″ or ″PARKSENSE UNAVAILABLE SERVICE REQUIRED″ for approximately five seconds. Under this condition, Rear ParkSense will not operate.

If “PARKSENSE UNAVAILABLE WIPE REAR SENSORS” appears in the instrument cluster display, make sure the outer surface and the underside of the rear fascia/bumper is clean and clear of snow, ice, mud, dirt or other obstructions and then cycle the ignition. if the message continues to appear, see an authorized dealer.

If “PARKSENSE UNAVAILABLE SERVICE REQUIRED” appears in the instrument cluster display, see an authorized dealer.

ParkSense System Usage Precautions

NOTE:

- Ensure that the outer surface and the underside of the rear bumper is clean and clear of snow, ice, mud, dirt or other obstruction to keep the Rear ParkSense system operating properly.
- Jackhammers, large trucks, and other vibrations could affect the performance of Rear ParkSense.
- Clean the Rear ParkSense sensors regularly, taking care not to scratch or damage them. The sensors must not be covered with ice, snow, slush, mud, dirt or debris. Failure to do so can result in the system not working properly. The Rear ParkSense system might not detect an obstacle behind the fascia/bumper, or it could provide a false indication that an obstacle is behind the fascia/bumper.
- Objects such as bicycle carriers, etc., must not be placed within 12 inches (30 cm) from the rear fascia/bumper while driving the vehicle. Failure to do so can result in the system misinterpreting a close object as a sensor problem, causing a failure indication to be displayed in the instrument cluster.

WARNING!

- **Drivers must be careful when backing up even when using ParkSense. Always check carefully behind your vehicle, look behind you, and be sure to check for pedestrians, animals, other vehicles, obstructions, and blind spots before backing up. You are responsible for safety and must continue to pay attention to your surroundings. Failure to do so can result in serious injury or death.**
- **Before using ParkSense, it is strongly recommended that the ball mount and hitch ball assembly is disconnected from the vehicle when the vehicle is not used for towing. Failure to do so can result in injury or damage to vehicles or obstacles because the hitch ball will be much closer to the obstacle than the rear fascia when the loudspeaker sounds the continuous tone. Also, the sensors could detect the ball mount and hitch ball assembly, depending on its size and shape, giving a false indication that an obstacle is behind the vehicle.**

CAUTION!

- **ParkSense is only a parking aid and it is unable to recognize every obstacle, including small obstacles. Parking curbs might be temporarily detected or not detected at all. Obstacles located above or below the sensors will not be detected when they are in close proximity.**
- **The vehicle must be driven slowly when using ParkSense in order to be able to stop in time when an obstacle is detected. It is recommended that the driver looks over his/her shoulder when using ParkSense.**

If it's necessary to keep the trailer hitch and hitch ball assembly mounted for a long period, it is possible to filter out the trailer hitch and hitch ball assembly presence in sensor field of view. The filtering operation must be performed only by an authorized dealer.

FRONT AND REAR PARKSENSE — IF EQUIPPED

The ParkSense Park Assist system provides visual and audible indications of the distance between the rear and/or front fascia and a detected obstacle when backing up or moving forward, e.g. during a parking maneuver.

Refer to “ParkSense System Usage Precautions” for limitations of this system and recommendations.

ParkSense will retain the last system state (enabled or disabled) from the last ignition cycle when the ignition is changed to the ON/RUN position.

ParkSense is active when the gear selector is shifted to REVERSE or to a forward gear and an obstacle is detected, as long as the system is ON. When the gear selector shifted to NEUTRAL (or PARK in case of automatic gearbox), the system becomes inactive. When the vehicle is moving forward, the system will remain active until the vehicle speed remains below approximately 11 mph (18 km/h). Reducing the speed approximately below 9 mph (15 km/h), the system will come back active. When the vehicle is moving in REVERSE, the system will remain active as long as the speed remains below the maximum operating speed of 7 mph (11 km/h). When the maximum speed limit is exceeded, the system is disabled and the ParkSense switch LED with illuminate. The system will become active again if the vehicle speed reduces below approximately 6 mph (9 km/h).

ParkSense Sensors

The six ParkSense sensors, located in the rear fascia/bumper, monitor the area behind the vehicle that is within the sensors’ field of view. The sensors can detect obstacles from approximately 12 inches (30 cm) up to 59 inches (150 cm) from the rear fascia/bumper in the horizontal direction, depending on the location, type and orientation of the obstacle.

NOTE: For further information on Active Park Assist, refer to the “ParkSense Active Park Assist System” section.

The six ParkSense sensors, located in the front fascia/bumper, monitor the area in front of the vehicle that is within the sensors’ field of view. The sensors can detect obstacles from approximately 12 inches (30 cm) up to 39 inches (100 cm) from the front fascia/bumper in the horizontal direction, depending on the location, type and orientation of the obstacle.

ParkSense Warning Display

The ParkSense Warning screen will only be displayed if "Sound and Display" is selected from the Customer - Programmable Features section of the Uconnect System. Refer to "Uconnect Settings" in "Multimedia" for further information.

The ParkSense Warning screen is located within the instrument cluster display. It provides visual warnings to indicate the distance between the rear fascia/bumper and/or front fascia/bumper and the detected obstacle. Refer to "Instrument Cluster Display" in "Getting To Know Your Instrument Panel" for further information.

ParkSense Display

Rear Park Assist

When the vehicle is in REVERSE, the instrument cluster display will show the park assist ready system status.

The system will indicate a detected obstacle by showing a single arc in one or more regions based on the obstacle's distance and location relative to the vehicle.

If an obstacle is detected in the center rear region, the display will show a single solid arc in the center rear region. As the vehicle moves closer to the obstacle, the display will show the single arc moving closer to the vehicle and the audible chime will increase as the objects gets closer to the vehicle.

If an obstacle is detected in the left and/or right rear region, the display will show a single flashing arc in the left and/or right rear region As the vehicle moves closer to the obstacle, the display will show the single arc moving closer to the vehicle and the audible chime will increase as the objects get closer to the vehicle.

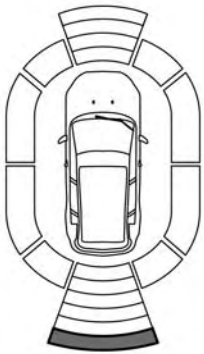

0616093739US

Single 1/2 Second Tone/Solid Arc

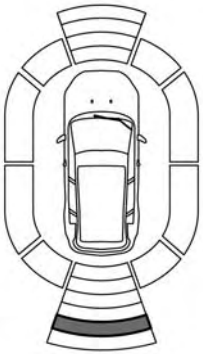

0616093740US

Slow Tone/Solid Arc

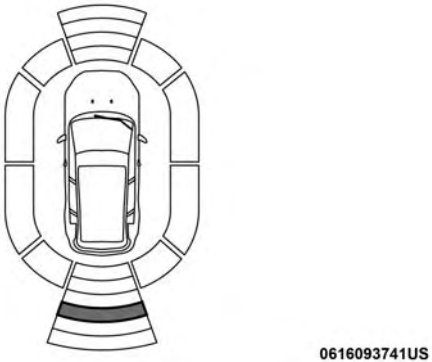

Slow Tone/Solid Arc

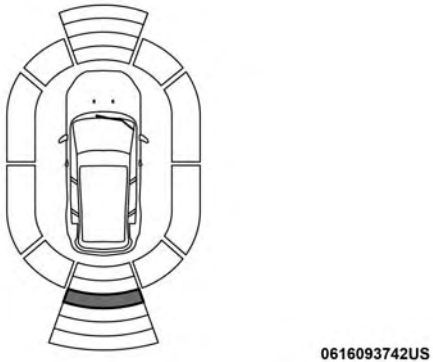

Fast Tone/Flashing Arc

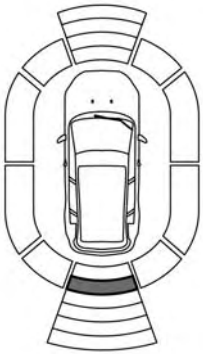

0616093743US

Fast Tone/Flashing Arc

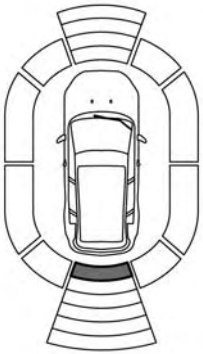

0616093744US

Continuous Tone/Flashing Arc

The vehicle is close to the obstacle when the warning display shows one flashing arc and sounds a continuous tone. The following chart shows the warning alert operation when the system is detecting an obstacle:

WARNING ALERTS							
Rear Distance (in/cm)	Greater than 59 in (150 cm)	59–52 in (150-130 cm)	52-41 in (130-105 cm)	41-34 in (105-85 cm)	34-24 in (85-60 cm)	24-12 in (60-30 cm)	Less than 12 in (30 cm)
Arcs — Left	None	None	None	None	None	2nd Flashing	1st Flashing
Arcs — Center	None	6th Solid	5th Solid	4th Solid	3rd Flashing	2nd Flashing	1st Flashing
Arcs — Right	None	None	None	None	None	2nd Flashing	1st Flashing
Audible Alert Chime	None	Single, 1/2 second, audible chime is heard.	Audible chime increases as the objects gets closer to the vehicle.				Continuous
Radio Volume Reduced	No	Yes					

NOTE: ParkSense will reduce the volume of the radio, if on, when the system is sounding an audible tone.

Front Park Assist

The ParkSense warning screen will be displayed when the gear selector is in the DRIVE position and an obstacle is detected, as long as the vehicle speed is below approximately 11 mph (18 km/h).

The system will indicate a detected obstacle by showing a single arc in one or more regions based on the obstacle's distance and location relative to the vehicle.

If an obstacle is detected in the center front region, the display will show a single arc in the center front region. As the vehicle moves closer to the obstacle, the display will show the single arc moving closer to the vehicle and the audible chime will increase as the object gets close to the vehicle.

If an obstacle is detected in the left and/or right front region, the display will show a single flashing arc in the left and/or right front region . As the vehicle moves closer to the obstacle, the display will show the single arc moving closer to the vehicle and the audible chime will increase as the objects gets close to the vehicle.

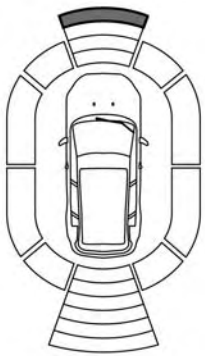

0616093746US

No Tone/Solid Arc

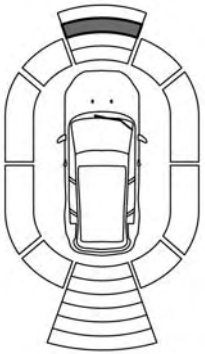

0616093745US

No Tone/Flashing Arc

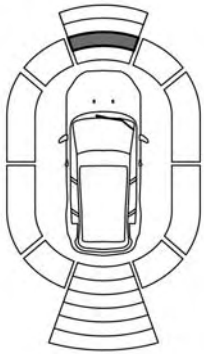

0616093747US

Fast Tone/Flashing Arc

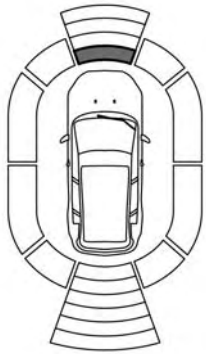

0616093748US

Continuous Tone/Flashing Arc

The vehicle is close to the obstacle when the warning display shows one flashing arc and sounds a continuous tone. The following chart shows the warning alert operation when the system is detecting an obstacle:

WARNING ALERTS					
Front Distance (in/cm)	Greater than 39 in (100 cm)	39-32 in (100-80 cm)	32-24 in (80-60 cm)	24-12 in (60-30 cm)	Less than 12 in (30 cm)
Arcs — Left	None	None	None	2nd Flashing	1st Flashing
Arcs — Center	None	4th Solid	3rd Flashing	2nd Flashing	1st Flashing
Arcs — Right	None	None	None	2nd Flashing	1st Flashing
Audible Alert Chime	None	None	None	Audible chime increases as the objects gets close to the vehicle.	Continuous
Radio Volume Reduced	No	No	No	Yes	

NOTE: ParkSense will reduce the volume of the radio, if on, when the system is sounding an audible tone.

Front Park Assist Audible Alerts

ParkSense will turn off the Front Park Assist audible alert (chime) after approximately three seconds when an obstacle has been detected, and the vehicle is stationary. If the obstacle has been detected within less than 12 inches (30 cm), then the Parksense will not turn off the Front Park Assist audible alert.

Adjustable Chime Volume Settings

Front and Rear chime volume settings can be selected from the Customer-Programmable Features section of the Uconnect System, refer to "Uconnect Settings" in "Multimedia" for further information.

If the Uconnect System is equipped, chime volume settings will not be accessible from the instrument cluster display.

The chime volume settings include low, medium, and high. The factory default volume setting is medium.

ParkSense will retain its last known configuration state through ignition cycles.

Enabling And Disabling ParkSense

ParkSense can be enabled and disabled with the ParkSense switch, located on the switch panel below the Uconnect display.

When the ParkSense switch is pushed to disable the system, the instrument cluster display will show the "ParkSense Disabled" message for approximately five seconds. Refer to "Instrument Cluster Display" in "Getting To Know Your Instrument Panel" for further information.

The ParkSense switch LED turns on when the system is disabled by pushing the switch, as well as in case of failure or temporary disabling conditions. The ParkSense switch LED will be off when the system is enabled. If the ParkSense switch is pushed, and requires service, the ParkSense switch LED will blink momentarily, and then the LED will be on.

Service The ParkSense Park Assist System

When the ParkSense System has detected a faulted condition, the instrument cluster display will actuate a single chime, and it will show the "PARKSENSE UNAVAILABLE WIPE REAR SENSORS", "PARKSENSE UNAVAILABLE WIPE FRONT SENSORS", or the "PARKSENSE UNAVAILABLE SERVICE REQUIRED" message for five seconds. Under this condition, ParkSense will not operate.

If "PARKSENSE UNAVAILABLE WIPE REAR SENSORS" or "PARKSENSE UNAVAILABLE WIPE FRONT SENSORS" appears in the instrument cluster display make sure the outer surface and the underside of the rear fascia/bumper and/or front fascia/bumper is clean and clear of snow, ice, mud, dirt or other obstruction and then cycle the ignition. If the message continues to appear see an authorized dealer.

If the "PARKSENSE UNAVAILABLE SERVICE REQUIRED" message appears in the instrument cluster display, see an authorized dealer.

Cleaning The ParkSense System

Clean the ParkSense sensors with water, car wash soap and a soft cloth. Do not use rough or hard cloths. Do not scratch or poke the sensors. Otherwise, you could damage the sensors.

ParkSense System Usage Precautions

NOTE:

- Ensure that the front and rear bumper are free of snow, ice, mud, dirt and debris to keep the ParkSense system operating properly.
- Construction equipment, large trucks, and other vibrations could affect the performance of ParkSense.
- When you turn ParkSense off, the instrument cluster display will read "PARKSENSE OFF." Furthermore, once you turn ParkSense off, it remains off until you turn it on again, even if you cycle the ignition key.
- ParkSense, when on, will reduce the volume of the radio when it is sounding a tone.
- Clean the ParkSense sensors regularly, taking care not to scratch or damage them. The sensors must not be covered with ice, snow, slush, mud, dirt or debris. Failure to do so can result in the system not working

properly. The ParkSense system might not detect an obstacle behind or in front of the fascia/bumper, or it could provide a false indication that an obstacle is behind or in front of the fascia/bumper.

- Use the ParkSense switch to turn the ParkSense system OFF if objects such as bicycle carriers, etc. are placed within 12 inches (30 cm) from the rear fascia/bumper. Failure to do so can result in the system misinterpreting a close object as a sensor problem, causing the "PARKSENSE UNAVAILABLE SERVICE REQUIRED" message to be displayed in the instrument cluster display.

NOTE: If any objects are attached to the bumper within a 6.5ft (2 m) field of view, they will interfere and cause false alerts and possibly blockage.

- There may be a delay in the object detection rate if the object is moving.
- The operation of the rear sensors is automatically deactivated when the trailer's electric plug is inserted in the vehicle's tow hook socket, while the front sensors stay active and can provide acoustic and visual warnings. The rear sensors are automatically reactivated when the trailer's cable plug is removed.

WARNING!

- **Drivers must be careful when backing up even when using ParkSense. Always check carefully behind your vehicle, look behind you, and be sure to check for pedestrians, animals, other vehicles, obstructions, and blind spots before backing up. You are responsible for safety and must continue to pay attention to your surroundings. Failure to do so can result in serious injury or death.**
- **Before using ParkSense, it is strongly recommended that the ball mount and hitch ball assembly is disconnected from the vehicle when the vehicle is not used for towing. Failure to do so can result in injury or damage to vehicles or obstacles because the hitch ball will be much closer to the obstacle than the rear fascia when the loudspeaker sounds the continuous tone. Also, the sensors could detect the ball mount and hitch ball assembly, depending on its size and shape, giving a false indication that an obstacle is behind the vehicle.**

CAUTION!

- **ParkSense is only a parking aid and it is unable to recognize every obstacle, including small obstacles. Parking curbs might be temporarily detected or not detected at all. Obstacles located above or below the sensors will not be detected when they are in close proximity.**
- **The vehicle must be driven slowly when using ParkSense in order to be able to stop in time when an obstacle is detected. It is recommended that the driver looks over his/her shoulder when using ParkSense.**

Side Distance Warning System

The Side Distance Warning system has the function of detecting the presence of side obstacles near the vehicle using the parking sensors located in the front and rear bumpers.

Side Distance Warning Display

The Side Distance Warning screen will only be displayed if "Sound and Display" is selected from the Customer - Programmable Features section of the Uconnect System. Refer to "Uconnect Settings" in "Multimedia" for further information.

The system warns the driver with an acoustic signal and where provided, with visual indications on the instrument panel display.

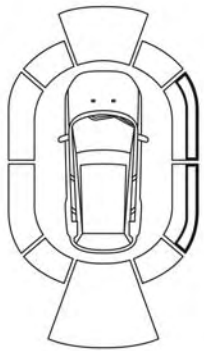

0618092418US

Fast Tone/Flashing Arcs

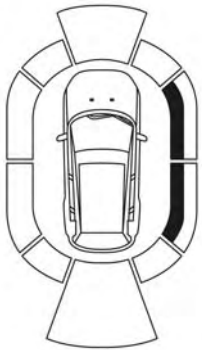

0618092419US

Continuous Tone/Flashing Arcs

Distance (in/cm)	Less than 12 inches (30 cm)	12–65 inches (30–60 cm)
Arcs-Left	Flashing	Flashing
Arcs-Right	Flashing	Flashing
Audible Alert Chime	Continuous	Audible chime increases as the objects within the vehicle's path get close to the vehicle.
Radio Volume Reduced	Yes	Yes

NOTE: Parksense will reduce the volume of the radio if on when the system is sounding an audible tone.

Activation — Deactivation

The system can operate only after driving a short distance and if the vehicle speed is between 0 and 11 mph (0 and 18 km/h). The system can be activated/deactivated via the "Settings" menu of the Uconnect system. If the ParkSense System is deactivated via the ParkSense Hard switch then the side distance warning system will automatically be deactivated.

Message on the display for Side Distance Warning feature:

"Wipe Sensors" — This message is displayed in the case of a failure of the Side Distance Warning system sensors. Free the bumpers of any obstacles, ensure that the front and rear bumper are free of snow, ice, mud, dirt and debris to keep the ParkSense system operating properly.

"SDW Not Available" — This message is displayed if the Side Distance Warning system is not available. The failed operation of the system might be due to the insufficient voltage from the battery or other failures on the electrical system. Contact an authorized dealer as soon as possible to have the electrical system checked.

Operation With A Trailer

The system is automatically deactivated when the trailer's electric plug is inserted in the vehicle's tow hook socket. The rear sensors are automatically reactivated when the trailer's cable plug is removed.

ParkSense Usage Precautions

Some conditions may influence the performance of the Side Distance Warning System:

NOTE:

- Ensure that the front and rear bumper are free of snow, ice, mud, dirt and debris to keep the ParkSense system operating properly.
- Construction equipment, large trucks, and other vibrations could affect the performance of ParkSense.
- When you turn ParkSense off, the message to appear in the instrument cluster display will read "PARKSENSE OFF." Furthermore, once you turn ParkSense off, it remains off until you turn it on again, even if you cycle the ignition key.
- ParkSense, when on, will reduce the volume of the radio when it is sounding a tone.
- Clean the ParkSense sensors regularly, taking care not to scratch or damage them. The sensors must not be covered with ice, snow, slush, mud, dirt or debris. Failure to do so can result in the system not working properly. The ParkSense system might not detect an obstacle behind or in front of the fascia/bumper, or it could provide a false indication that an obstacle is behind or in front of the fascia/bumper.
- The presence of a tow hook without a trailer may interfere with the correct operation of the parking sensors. Before using the ParkSense system, it is recommended to remove the removable tow hook ball assembly and any attachments from the vehicle when it is not used for towing operations. If you wish to leave the tow hook fitted without towing a trailer, it is advisable to contact your authorized dealer for the ParkSense system update operations because the tow hook could be detected as an obstacle by the central sensors.

WARNING!

- **Drivers must be careful when backing up even when using ParkSense. Always check carefully behind your vehicle, look behind you, and be sure to check for pedestrians, animals, other vehicles, obstructions, and blind spots before backing up. You are responsible for safety and must continue to pay attention to your surroundings. Failure to do so can result in serious injury or death.**
- **Before using ParkSense, it is strongly recommended that the ball mount and hitch ball assembly is disconnected from the vehicle when the vehicle is not used for towing. Failure to do so can result in injury or damage to vehicles or obstacles because the hitch ball will be much closer to the obstacle than the rear fascia when the loudspeaker sounds the continuous tone. Also, the sensors could detect the ball mount and hitch ball assembly, depending on its size and shape, giving a false indication that an obstacle is behind the vehicle.**

CAUTION!

- **ParkSense is only a parking aid and it is unable to recognize every obstacle, including small obstacles. Parking curbs might be temporarily detected or not detected at all. Obstacles located above or below the sensors will not be detected when they are in close proximity.**
- **The vehicle must be driven slowly when using ParkSense in order to be able to stop in time when an obstacle is detected. It is recommended that the driver looks over his/her shoulder when using ParkSense.**

PARKSENSE ACTIVE PARK ASSIST SYSTEM — IF EQUIPPED

The ParkSense Active Park Assist system is intended to assist the driver during Parallel, Perpendicular, and Parallel Park Exit maneuvers by identifying a proper parking space, providing audible/visual instructions, and controlling the steering wheel. The ParkSense Active Park Assist system is defined as “semi-automatic” since the driver maintains control of the accelerator, gear selector and brakes. Depending on the driver’s parking maneuver selection, the ParkSense Active Park Assist system is capable

of maneuvering a vehicle into a parallel or a perpendicular parking space on either side (i.e., driver side or passenger side), as well as exiting a parallel parking space.

NOTE:

- The driver is always responsible for controlling the vehicle, responsible for any surrounding objects, and must intervene as required.
- The system is provided to assist the driver and not to substitute the driver.
- During a semi-automatic maneuver, if the driver touches the steering wheel after being instructed to remove their hands from the steering wheel, the system will cancel, and the driver will be required to manually complete the parking maneuver.
- The system may not work in all conditions (e.g. environmental conditions such as heavy rain, snow, etc., or if searching for a parking space that has surfaces that will absorb the ultrasonic sensor waves).

Enabling And Disabling The ParkSense Active Park Assist System

The ParkSense Active Park Assist system can be enabled and disabled with the ParkSense Active Park Assist switch, located on the switch panel below the Uconnect display.

To enable the ParkSense Active Park Assist system, push the ParkSense Active Park Assist switch once (LED turns on).

To disable the ParkSense Active Park Assist system, push the ParkSense Active Park Assist switch again (LED turns off).

The ParkSense Active Park Assist system will turn off automatically for any of the following conditions:

- The parking maneuver is completed.
- Vehicle speed greater than 18 mph (30 km/h) when searching for a parking space.
- Vehicle speed greater than 5 mph (7 km/h) during active steering guidance into the parking space.
- Touching the steering wheel during active steering guidance into the parking space.
- Pushing the ParkSense Front and Rear Park Assist switch.

- Driver's door is opened.
- Rear liftgate is opened.
- Electronic Stability Control/Anti-lock Braking System intervention.
- The ParkSense Active Park Assist system will allow a maximum number of shifts between DRIVE and REVERSE. If the maneuver cannot be completed within the maximum amount of shifts, the system will cancel and the instrument cluster display will instruct the driver to complete the maneuver manually.

The ParkSense Active Park Assist system will only operate and search for a parking space when the following conditions are present:

- Gear position is in DRIVE.
- Ignition is in the RUN position.
- ParkSense Active Park Assist switch is activated.
- Driver's door is closed.
- Rear liftgate is closed.
- Vehicle speed is less than 15 mph (25 km/h).

NOTE: If the vehicle is driven above approximately 15 mph (25 km/h), the instrument cluster display will instruct the driver to slow down. If the vehicle is driven above approximately 18 mph (30 km/h), the system will cancel. The driver must then reactivate the system by pushing the ParkSense Active Park Assist switch.

- The outer surface and the underside of the front and rear fascias/bumpers are clean and clear of snow, ice, mud, dirt or other obstruction.

When pushed, the LED on the ParkSense Active Park Assist switch will blink momentarily, and then the LED will turn off if any of the above conditions are not present.

Parallel Parking Space Assistance Operation/ Display

When the ParkSense Active Park Assist system is enabled the "Active ParkSense Searching - Press ◁ or ▷ to Switch Maneuver" message will appear in the instrument cluster display. You may switch to perpendicular parking or Parallel Park Exit if you desire. The arrow buttons on the left side of the steering wheel can be used to switch parking maneuvers.

NOTE:

- When searching for a parking space, use the turn signal indicator to select which side of the vehicle you want to perform the parking maneuver. The ParkSense Active Park Assist system will automatically search for a parking space on the passenger's side of the vehicle if the turn signal is not activated.
- The driver needs to make sure that the selected parking space for the maneuver remains free and clear of any obstructions (e.g. pedestrians, bicycles, etc.).
- The driver is responsible to ensure that the selected parking space is suitable for the maneuver and free/clear of anything that may be overhanging or protruding into the parking space (e.g., ladders, tailgates, etc. from surrounding objects/vehicles).
- When seeking for a parking space, the driver should drive as parallel or perpendicular (depending on the type of maneuver) to other vehicles as possible.
- The feature will only indicate the last detected parking space (example: if passing multiple available parking spaces, the system will only indicate the last detected parking space for the maneuver).

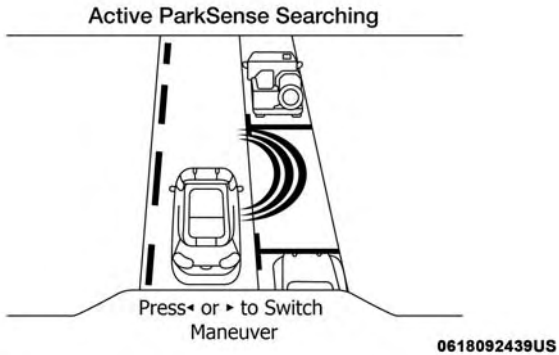

Active ParkSense Searching

When an available parking space has been found, and the vehicle is not in position, you will be instructed to move forward to position the vehicle for a parallel parking sequence.

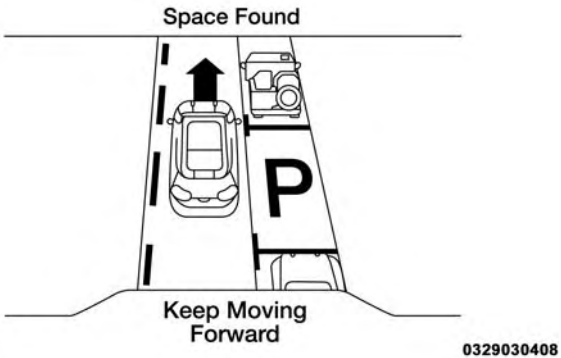

Space Found — Keep Moving Forward

Once the vehicle is in position, you will be instructed to stop the vehicle's movement and remove your hands from the steering wheel.

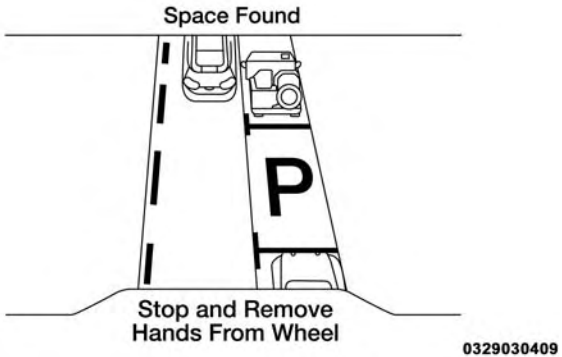

Space Found — Stop And Remove Hands From Wheel

Once the vehicle is at a standstill with your hands removed from the steering wheel, you will be instructed to place the gear selector into the REVERSE position.

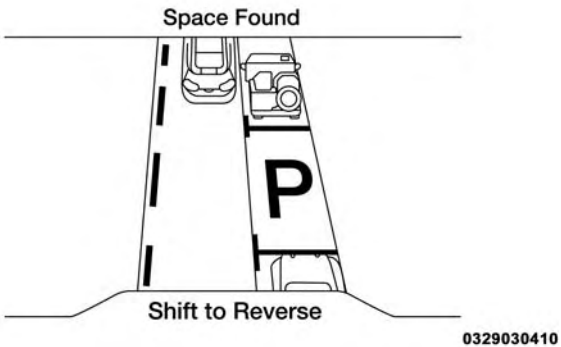

Space Found — Shift To Reverse

When the driver places the gear selector into the REVERSE position, the system may instruct the driver to wait for steering to complete.

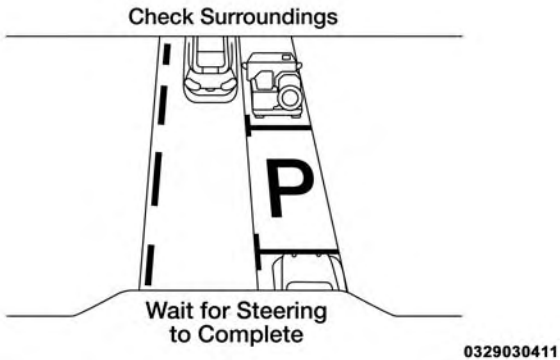

Check Surroundings — Wait For Steering To Complete

The system will then instruct the driver to check their surroundings and move backward.

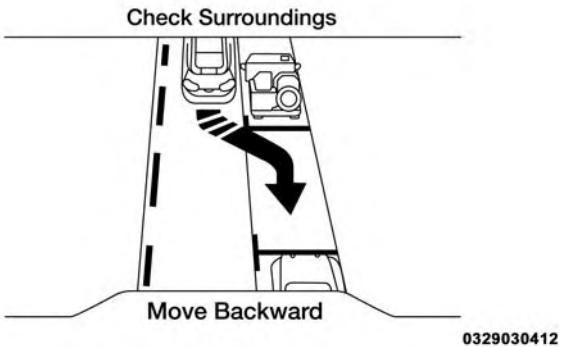

Check Surroundings — Move Backward

NOTE:

- It is the driver's responsibility to use the brake and accelerator during the semi-automatic parking maneuver.
- When the system instructs the driver to remove their hands from the steering wheel, the driver should check their surroundings and begin to back up slowly.
- The Active ParkSense System will allow a maximum amount of shifts between DRIVE and REVERSE, and then the system will cancel and the instrument cluster display will instruct the driver to complete the maneuver manually.
- The system will cancel the maneuver if the vehicle speed exceeds 5 mph (7 km/h) during active steering guidance into the parking space. The system will provide a warning to the driver at 3 mph (5 km/h) that tells them to slow down. The driver is then responsible for completing the maneuver if the system is canceled.
- If the system is canceled during the maneuver for any reason, the driver must take control of the vehicle.

When the vehicle has reached the end of its backward movement, the system will instruct the driver to check their surroundings and stop the vehicle's movement.

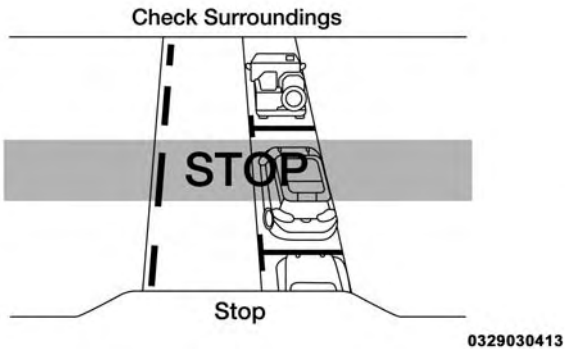

Check Surroundings — STOP

NOTE: It is the driver's responsibility to use the brake and stop the vehicle. The driver should check their surroundings and be prepared to stop the vehicle either when instructed to, or when driver intervention is required.

Once the vehicle is in a standstill condition, the driver will be instructed to place the gear selector into the DRIVE position.

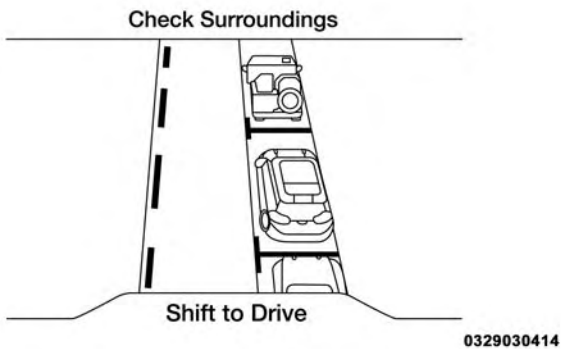

Check Surroundings — Shift To Drive

When the driver places the gear selector into the DRIVE position, the system may instruct the driver to wait for steering to complete.

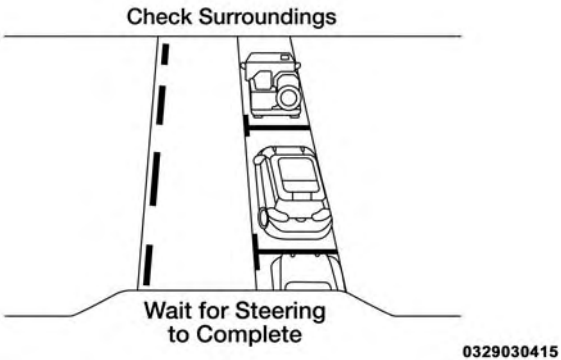

Check Surroundings — Wait For Steering To Complete

The system will then instruct the driver to check their surroundings and move forward.

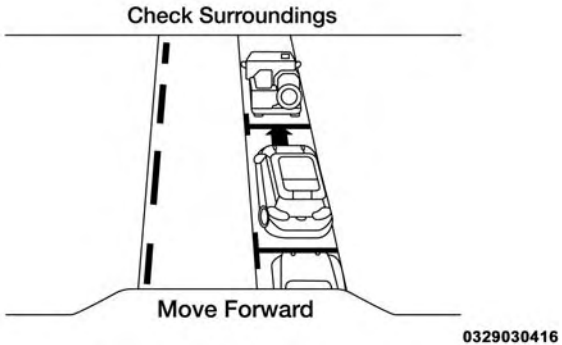

Check Surroundings — Move Forward

When the vehicle has reached the end of its forward movement, the system will instruct the driver to check their surroundings and stop the vehicle's movement.

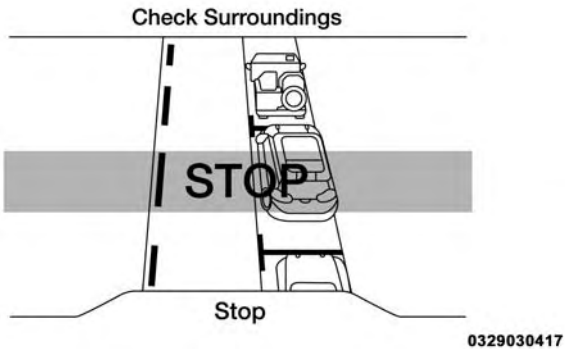

Check Surroundings — STOP

NOTE: It is the driver's responsibility to use the brake and stop the vehicle. The driver should check their surroundings and be prepared to stop the vehicle either when instructed to, or when driver intervention is required.

Once the vehicle is in a standstill condition, the driver will be instructed to place the gear selector into the REVERSE position.

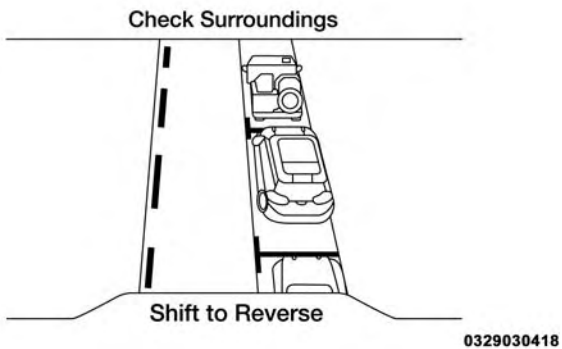

Check Surroundings — Shift To Reverse

When the driver places the gear selector into the REVERSE position, the system may instruct the driver to wait for steering to complete.

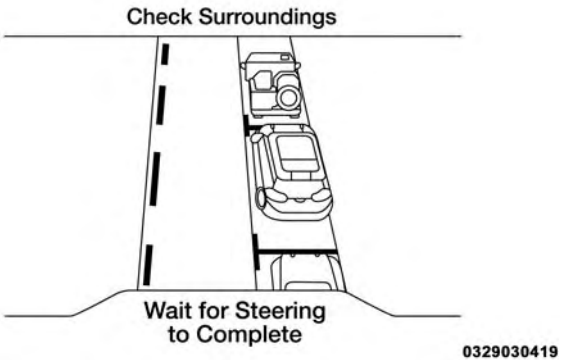

Check Surroundings — Wait For Steering To Complete

The system will then instruct the driver to check their surroundings and move backward.

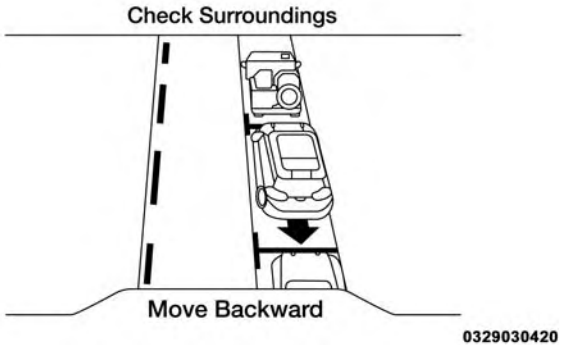

Check Surroundings — Move Backward

Your vehicle is now in the parallel park position. The "Active ParkSense Complete - Check Parking Position" message will be momentarily displayed. When the maneuver is complete, the driver will be instructed to check the vehicle's parking position. If the driver is satisfied with the vehicle position, they should shift to PARK.

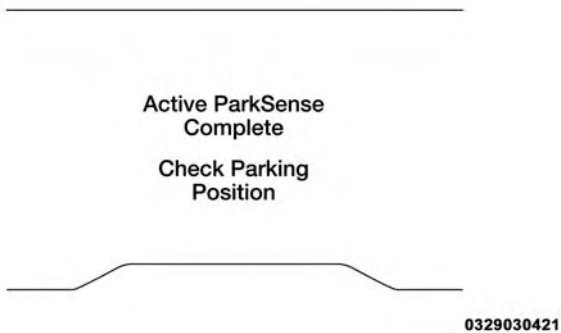

Active ParkSense Complete — Check Parking Position

Perpendicular Parking Space Assistance Operation/Display

When the ParkSense Active Park Assist system is enabled, the "Active ParkSense Searching - Press ◁ or ▷ to Switch Maneuver" message will show in the instrument cluster display. The arrow buttons on the left side of the steering wheel can be used to switch parking maneuvers. You may switch to parallel parking, or Parallel Park Exit, if you desire. Refer to "Exiting The Parking Space" in this section for more information.

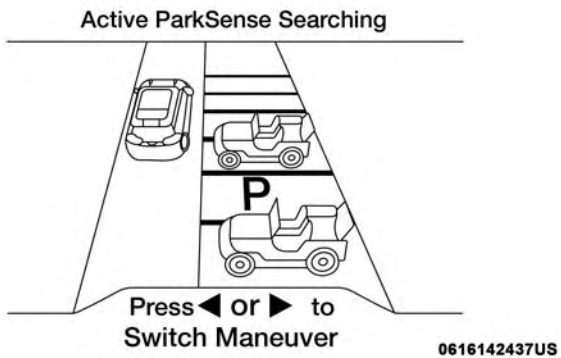

Active ParkSense Searching Display

NOTE:

- When searching for a parking space, use the turn signal indicator to select which side of the vehicle you want to perform the parking maneuver. The ParkSense Active Park Assist system will automatically search for a parking space on the passenger's side of the vehicle if the turn signal is not activated.
- The driver needs to make sure that the selected parking space for the maneuver remains free and clear of any obstructions (e.g. pedestrians, bicycles, etc.).
- The driver is responsible to ensure that the selected parking space is suitable for the maneuver and free/clear of anything that may be overhanging or protruding into the parking space (e.g., ladders, tailgates, etc. from surrounding objects/vehicles).
- When seeking for a parking space, the driver should drive as parallel or perpendicular (depending on the type of maneuver) to other vehicles as possible.
- The feature will only indicate the last detected parking space (example: if passing multiple available parking spaces, the system will only indicate the last detected parking space for the maneuver).

When an available parking space has been found, and the vehicle is not in position, you will be instructed to move forward to position the vehicle for a perpendicular parking sequence.

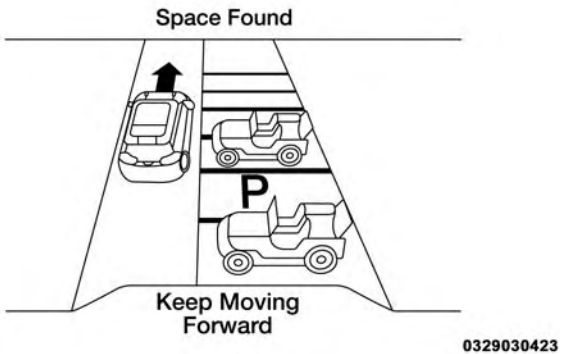

Space Found — Keep Moving Forward

Once the vehicle is in position, you will be instructed to stop the vehicle's movement and remove your hands from the steering wheel.

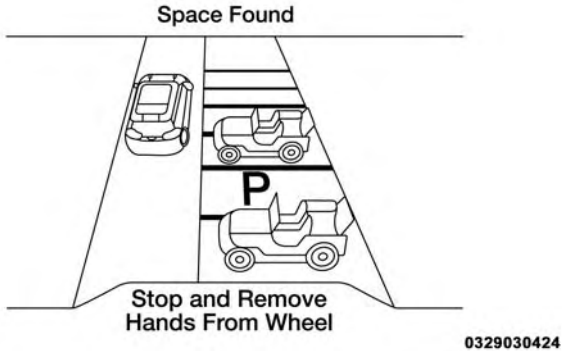

Space Found — Stop And Remove Hands From Wheel

Once the vehicle is at a standstill with your hands removed from the steering wheel, you will be instructed to place the gear selector into the REVERSE position.

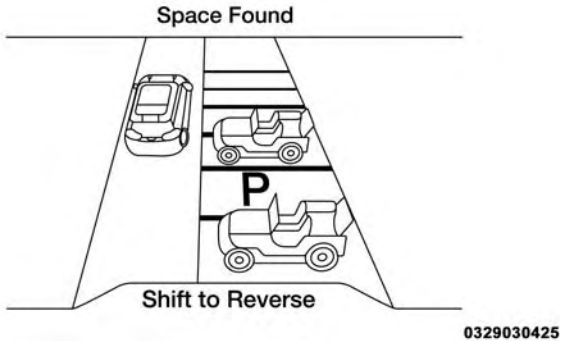

Space Found — Shift To Reverse

When the driver places the gear selector into the REVERSE position, the system may instruct the driver to wait for steering to complete.

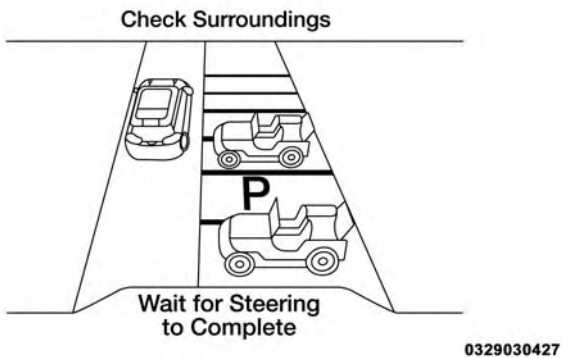

Check Surroundings — Wait For Steering To Complete

The system will then instruct the driver to check their surroundings and move backward.

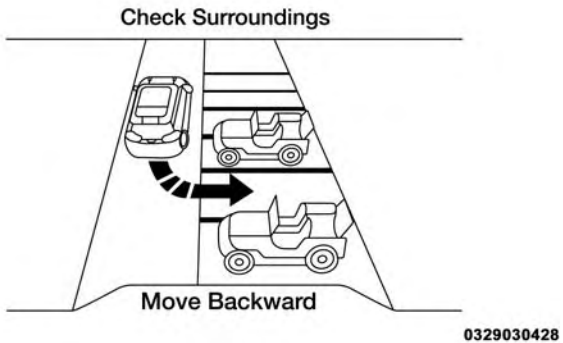

Check Surroundings — Move Backward

NOTE:

- It is the driver's responsibility to use the brake and accelerator during the semi-automatic parking maneuver.
- When the system instructs the driver to remove their hands from the steering wheel, the driver should check their surroundings and begin to back up slowly.
- The Active ParkSense System will allow a maximum number of shifts between DRIVE and REVERSE. If the maneuver cannot be completed, the system will cancel and the instrument cluster display will instruct the driver to complete the maneuver manually.
- The system will cancel the maneuver if the vehicle speed exceeds 5 mph (7 km/h) during active steering guidance into the parking space. The system will provide a warning to the driver at 3 mph (5 km/h) that tells them to slow down. The driver is then responsible for completing the maneuver if the system is canceled.
- If the system is canceled during the maneuver for any reason, the driver must take control of the vehicle.

When the vehicle has reached the end of its backward movement, the system will instruct the driver to check their surroundings and stop the vehicle's movement.

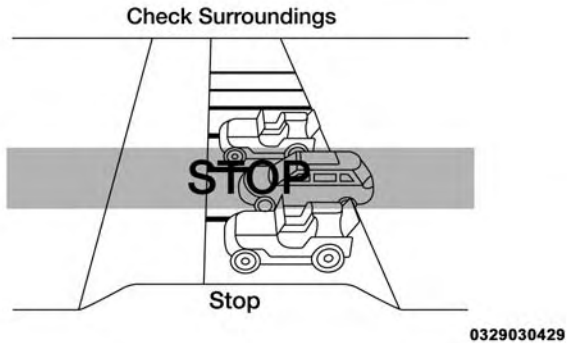

Check Surroundings — STOP

NOTE: It is the driver's responsibility to use the brake and stop the vehicle. The driver should check their surroundings and be prepared to stop the vehicle either when instructed to, or when driver intervention is required.

Once the vehicle is in a standstill condition, the driver will be instructed to place the gear selector into the DRIVE position.

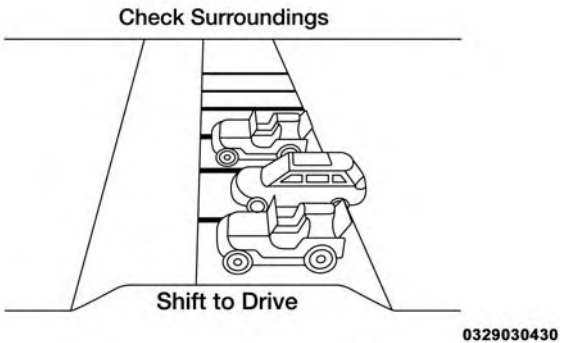

Check Surroundings — Shift To Drive

When the driver places the gear selector into the DRIVE position, the system may instruct the driver to wait for steering to complete.

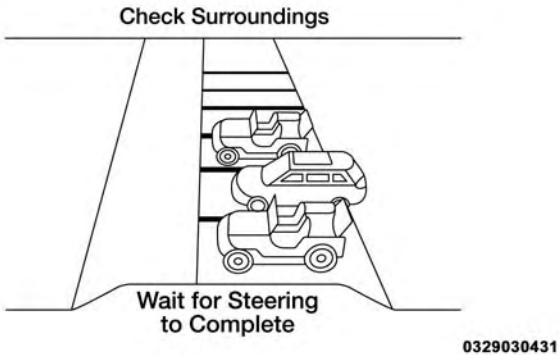

Check Surroundings — Wait For Steering To Complete

The system will then instruct the driver to check their surroundings and move forward.

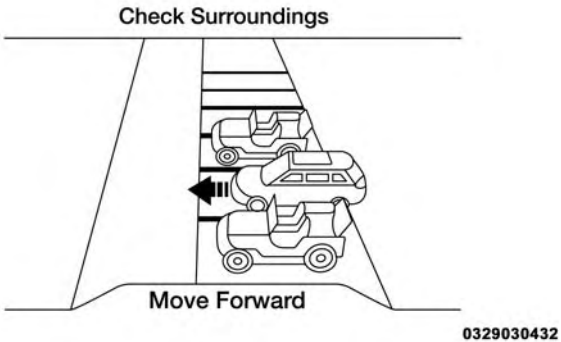

Check Surroundings — Move Forward

When the vehicle has reached the end of its forward movement, the system will instruct the driver to check their surroundings and stop the vehicle's movement.

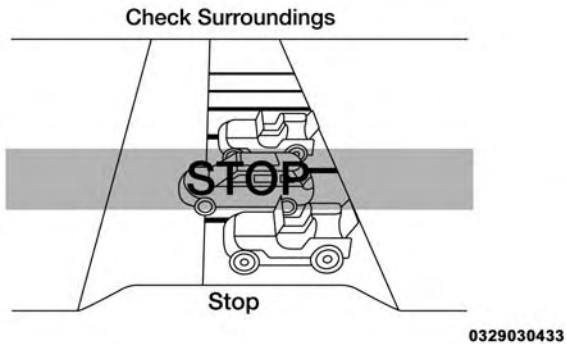

Check Surroundings — STOP

NOTE: It is the driver's responsibility to use the brake and stop the vehicle. The driver should check their surroundings and be prepared to stop the vehicle either when instructed to, or when driver intervention is required.

Once the vehicle is in a standstill condition, the driver will be instructed to place the gear selector into the REVERSE position.

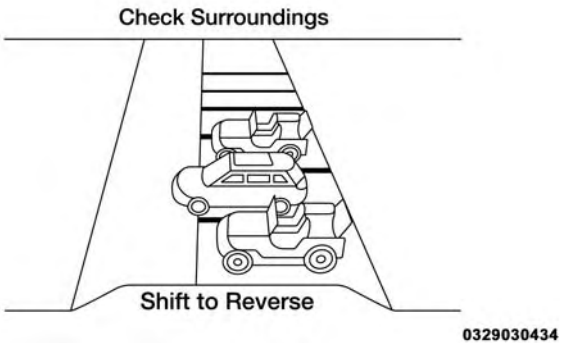

Check Surroundings — Shift To Reverse

When the driver places the gear selector into the REVERSE position, the system may instruct the driver to wait for steering to complete.

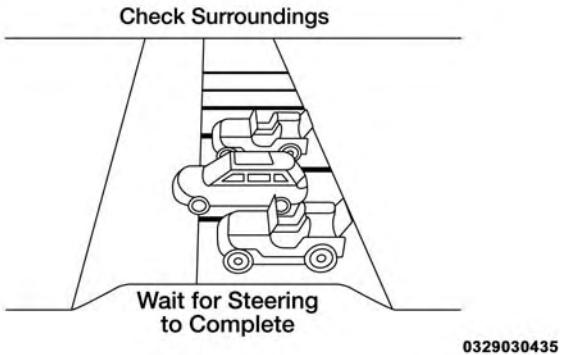

Check Surroundings — Wait For Steering To Complete

The system will then instruct the driver to check their surroundings and move backward.

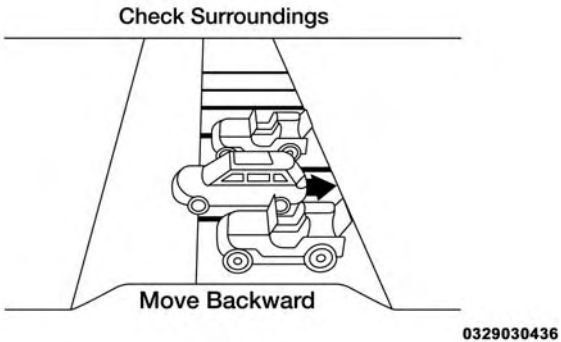

Check Surroundings — Move Backward

Your vehicle is now in the perpendicular park position. When the maneuver is complete, the driver will be instructed to check the vehicle's parking position. If the driver is satisfied with the vehicle position, they should shift to PARK. The "Active ParkSense Complete - Check Parking Position" message will be momentarily displayed.

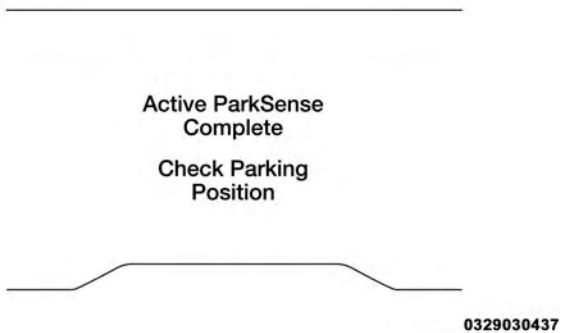

Active ParkSense Complete — Check Parking Position

WARNING!

Drivers must be careful when performing parallel or perpendicular parking maneuvers even when using the ParkSense Active Park Assist system. Always check carefully behind and in front of your vehicle, look behind and in front of you, and be sure to check for pedestrians, animals, other vehicles, obstructions, and blind spots before backing up and moving forward. You are responsible for safety and must continue to pay attention to your surroundings. Failure to do so can result in serious injury or death.

CAUTION!

- **The ParkSense Active Park Assist system is only a parking aid and it is unable to recognize every obstacle, including small obstacles. Parking curbs might be temporarily detected or not detected at all. Obstacles located above or below the sensors will not be detected when they are in close proximity.**
- **The vehicle must be driven slowly when using the ParkSense Active Park Assist system in order to be able to stop in time when an obstacle is detected. It is recommended that the driver looks over his/her shoulder when using the ParkSense Active Park Assist system.**

Exiting The Parking Space

NOTE: The function does not work for exiting a perpendicular parking space, but only exiting parallel parking spaces.

Activation

To activate this function, push the Active ParkSense hard switch and then use the steering wheel arrow buttons to select the Parallel Park Exit feature. After the selection, the system activates and warns the driver on the instrument panel display about the operations that have to be carried out to perform the maneuver correctly.

Selection Of The Maneuver Side

Use the right and left arrow buttons on the steering wheel to select between parallel or perpendicular parking mode. Then use the direction indicators (turn signals) to choose the direction that you want to perform the maneuver.

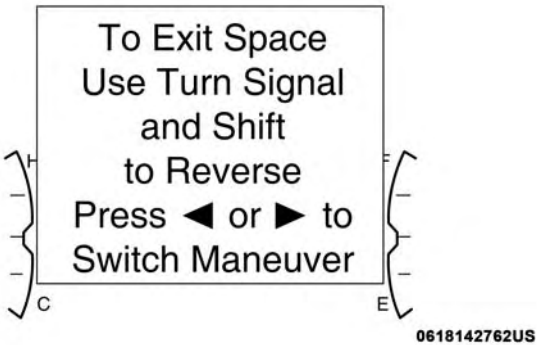

To Exit Space Use Turn Signal And Shift To Reverse — Press Left Or Right to Switch Maneuver

During the maneuver, the system asks to shift to REVERSE, select the direction indicator in the direction you want to exit. Let go of the steering wheel and press the dedicated pedals, while the system handles the steering automatically for exiting the parking space. If the driver continues to carry out a voluntary or involuntary action on the steering wheel during the exit maneuver (touching or holding the steering wheel to prevent its movement), the maneuver will be interrupted.

Check Surroundings — Stop And Remove Hands From Wheel

Check Surroundings — Wait For Steering To Complete

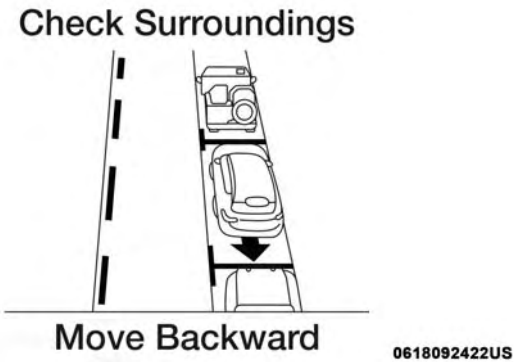

Check Surroundings — Move Backward

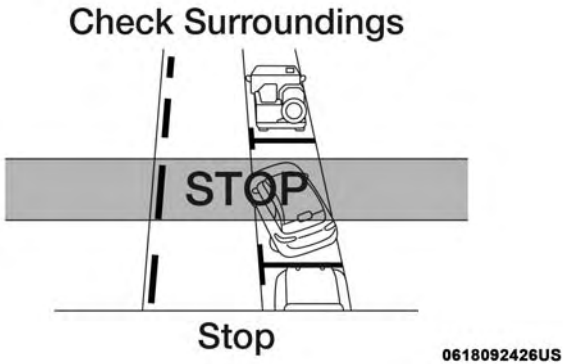

Check Surroundings — Stop

Check Surroundings — Shift To Drive

Check Surroundings — Wait For Steering To Complete

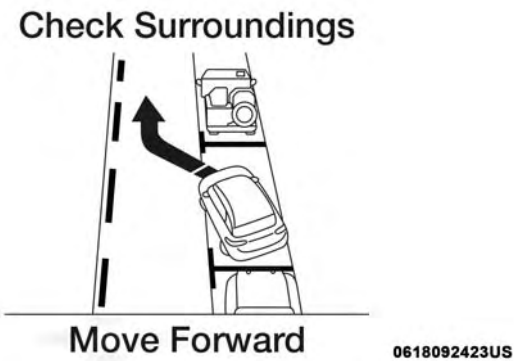

Check Surroundings — Move Forward

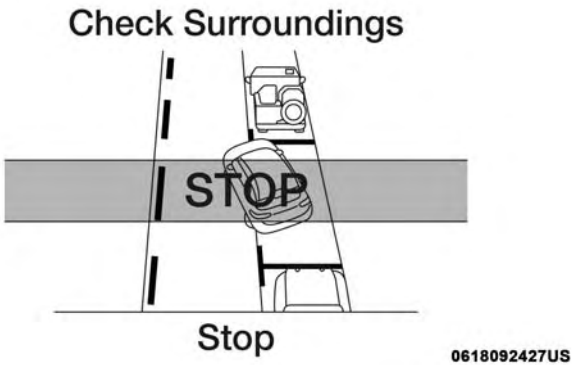

Check Surroundings — Stop

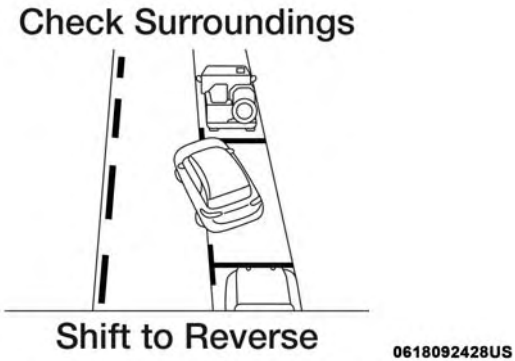

Check Surroundings — Shift To Reverse

Check Surroundings — Wait For Steering To Complete

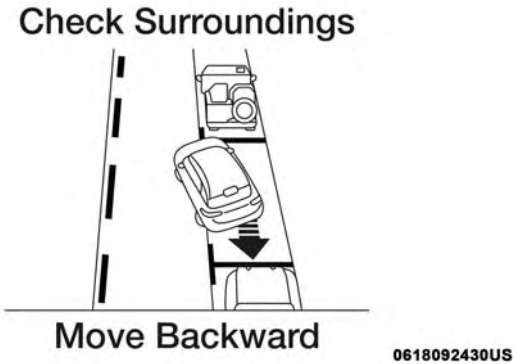

Check Surroundings — Move Backward

End Of Maneuver

The semi-automatic maneuver ends when the display shows the message of a completed maneuver. At the end of the maneuver, the system gives back the vehicle control to the driver.

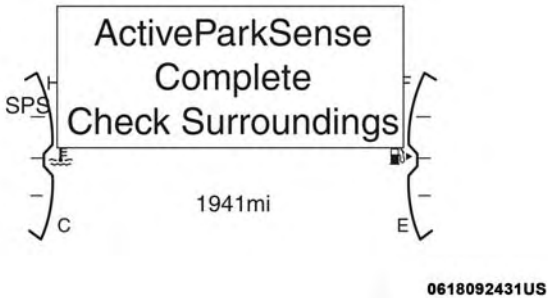

Active ParkSense Complete Check Surroundings

Important Information

- If the sensors undergo impact which alters their position, the system operation could be greatly affected.
- The sensors reach top performance after the vehicle has gone about 30 miles (50 km) due to the dynamic tire circumference calculations used for parking.

- Clean the ParkSense sensors regularly, taking care not to scratch or damage them. The sensors must not be covered with ice, snow, slush, mud, dirt or debris. Failure to do so can result in the system not working properly. The ParkSense system might not detect an obstacle behind or in front of the fascia/bumper, or it could provide a false indication that an obstacle is behind or in front of the fascia/bumper.
- Construction equipment, large trucks, and other vibrations could affect the performance of ParkSense.
- Sensors may detect a nonexistent obstacle (echo noise) due to mechanical noises, for example while washing the vehicle or in the case of rain, strong wind, and hail.
- The sensors may not detect objects of a particular shape or made from particular materials (very thin poles, trailer beams, panels, nets, bushes, anti-parking posts, pavements, rubbish bins, motor vehicles, etc.). Always take great care to check that the vehicle and its path are actually compatible with the parking place identified by the system.
- The use of wheels and tires that are different size to the original equipment could affect the operation of the system.
- The operation of the rear sensors is automatically deactivated when the trailer's electric plug is inserted in the vehicle's tow hook socket, while the front sensors stay active and can provide acoustic and visual warnings. The rear sensors are automatically reactivated when the trailer's cable plug is removed.
- In "Search in progress" mode, the system could incorrectly identify a parking place to carry out the maneuver (e.g. by a junction, driveways, roads crossing the direction of travel, etc.).
- In the case of parking maneuvers on roads on a slope, the performance of the system could be inferior and it may deactivate.
- If a parking maneuver is being carried out between two parked vehicles alongside the pavement, the system may cause the vehicle to mount the pavement.
- Some maneuvers at very tight bends might be impossible to be carried out.
- Take great care to ensure that conditions do not change during the parking maneuver (e.g. if there are persons and/or animals in the parking place, moving vehicles, etc.) and intervene immediately if necessary.

- During parking maneuvers, pay attention to vehicles approaching from the opposite direction. Always abide by the law and road regulations.

NOTE:

- Correct system operation is not guaranteed if snow chains or the space-saver wheel are fitted.
- The function only informs the driver about the last appropriate parking place (parallel or perpendicular) detected by the parking sensors.
- Some messages displayed are accompanied by acoustic warnings.

LANESENSE — IF EQUIPPED

LaneSense Operation

The LaneSense system is operational at speeds above 37 mph (60 km/h) and below 112 mph (180 km/h). The LaneSense system uses a forward looking camera to detect lane markings and measure vehicle position within the lane boundaries.

When both lane markings are detected and the driver unintentionally drifts out of the lane (no turn signal applied), the LaneSense system provides a haptic warning in the form of torque applied to the steering wheel to prompt the driver to remain within the lane boundaries. If the driver continues to unintentionally drift out of the lane, the LaneSense system provides a visual warning through the instrument cluster display to prompt the driver to remain within the lane boundaries.

The driver may manually override the haptic warning by applying torque into the steering wheel at any time.

When only a single lane marking is detected and the driver unintentionally drifts across the lane marking (no turn signal applied), the LaneSense system provides a visual warning through the instrument cluster display to prompt the driver to remain within the lane. When only a single lane marking is detected, a haptic (torque) warning will not be provided.

NOTE: When operating conditions have been met, the LaneSense system will monitor if the driver's hands are on the steering wheel and provides an audible warning to the driver when the driver's hands are not detected on the steering wheel. The system will cancel if the driver does not return their hands to the wheel.

Turning LaneSense On Or Off

The default status of LaneSense is off.

The LaneSense button is located on the center stack.

To turn the LaneSense system on, push the LaneSense button (LED turns off). A "Lane Sense On" message is shown in the instrument cluster display.

To turn the LaneSense system off, push the LaneSense button once (LED turns on).

NOTE: The LaneSense system will retain the last system state on or off from the last ignition cycle when the ignition is changed to the RUN position.

LaneSense Warning Message

The LaneSense system will indicate the current lane drift condition through the instrument cluster display.

Base Instrument Cluster Display — If Equipped

When the LaneSense system is on, the lane lines are gray when both of the lane boundaries have not been detected and the LaneSense telltale is solid white.

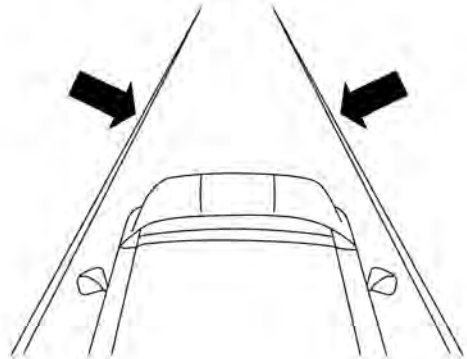

System On (Gray Lines/White Telltale)

Left Lane Departure — Only Left Lane Detected

- When the LaneSense system is on, the LaneSense telltale is solid white when only the left lane marking has been detected and the system is ready to provide visual warnings in the instrument cluster display if an unintentional lane departure occurs.

- When the LaneSense system senses the lane has been approached and is in a lane departure situation, the left thick lane line flashes from white to gray, the left thin line remains solid white and the LaneSense telltale changes from solid white to flashing yellow.

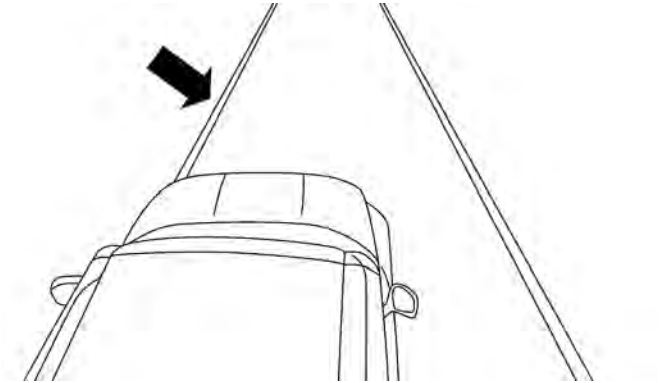

Lane Approached (Flashing White To Gray Thick Line/Flashing Yellow Telltale)

NOTE: The LaneSense system operates with the similar behavior for a right lane departure when only the right lane marking has been detected.

Left Lane Departure — Both Lanes Detected

- When the LaneSense system is on, the lane lines turn from gray to white to indicate that both of the lane markings have been detected. The LaneSense telltale is solid green when both lane markings have been detected and the system is "armed" to provide visual warnings in the instrument cluster display and a torque warning in the steering wheel if an unintentional lane departure occurs.

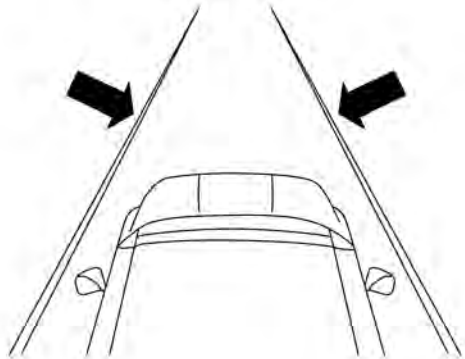

Lanes Sensed (White Lines/Green Telltale)

- When the LaneSense system senses a lane drift situation, the left thick lane line and the left thin line turn solid white. The LaneSense telltale changes from solid green to solid yellow. At this time torque is applied to the steering wheel in the opposite direction of the lane boundary.
- For example: If approaching the left side of the lane, the steering wheel will turn to the right.

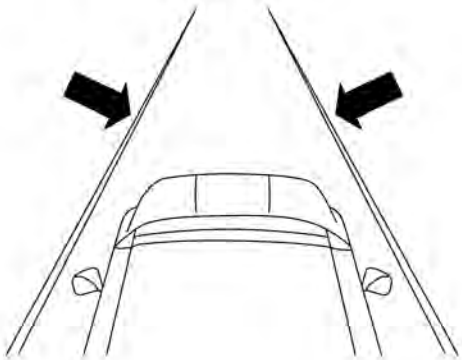

Lane Sensed (Solid White Thick Line, Solid White Thin Line/Solid Yellow Telltale)

- When the LaneSense system senses the lane has been approached and is in a lane departure situation, the left thick lane line flashes from white to gray, the left thin line remains solid white and the LaneSense telltale changes from solid yellow to flashing yellow. At this time, torque is applied to the steering wheel in the opposite direction of the lane boundary.
- For example: If approaching the left side of the lane, the steering wheel will turn to the right.

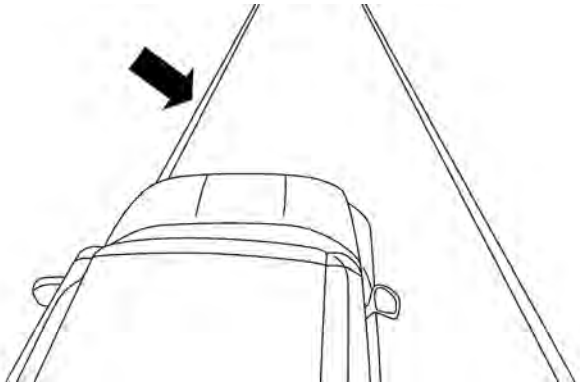

Lane Approached (Flashing White To Gray Thick Line, Solid White Thin Line/Flashing Yellow Telltale)

NOTE: The LaneSense system operates with the similar behavior for a right lane departure.

Premium Instrument Cluster Display — If Equipped

When the LaneSense system is on, the lane lines are gray when both of the lane boundaries have not been detected and the LaneSense telltale is solid white.

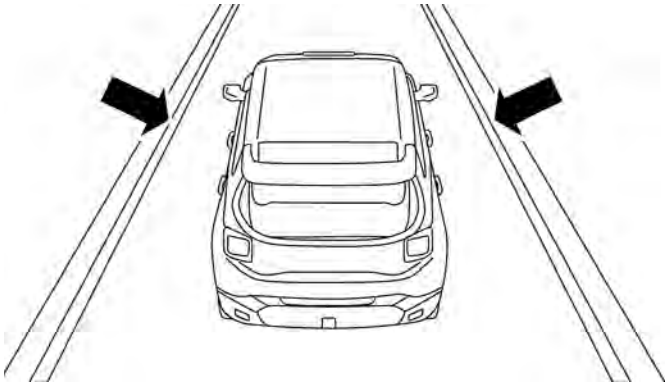

System On (Gray Lines/White Telltale)

Left Lane Departure — Only Left Lane Detected

- When the LaneSense system is on, the LaneSense telltale is solid white when only the left lane marking has been detected and the system is ready to provide visual warnings in the instrument cluster display if an unintentional lane departure occurs.
- When the LaneSense system senses the lane has been approached and is in a lane departure situation, the left thick lane line flashes yellow (on/off), the left thin line remains solid yellow and the LaneSense telltale changes from solid white to flashing yellow.

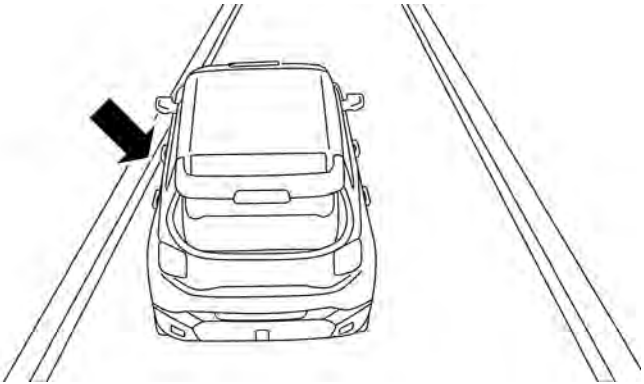

Lane Approached (Flashing Yellow Thick Line, Solid Yellow Thin Line/Flashing Yellow Telltale)

NOTE: The LaneSense system operates with the similar behavior for a right lane departure when only the right lane marking has been detected.

Left Lane Departure — Both Lanes Detected

- When the LaneSense system is on, the lane lines turn from gray to white to indicate that both of the lane markings have been detected. The LaneSense telltale is solid green when both lane markings have been detected and the system is "armed" to provide visual warnings in the instrument cluster display and a torque warning in the steering wheel if an unintentional lane departure occurs.

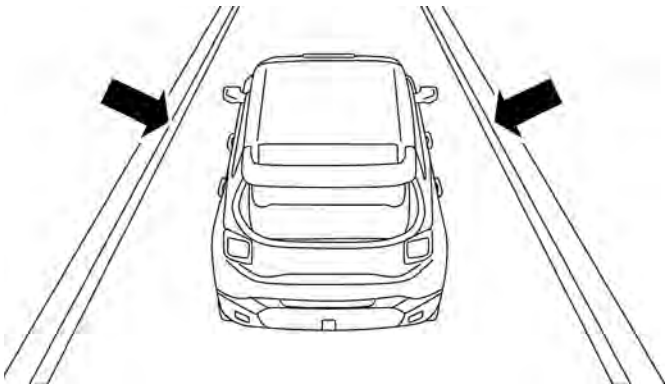

Lanes Sensed (White Lines/Green Telltale)

- When the LaneSense system senses a lane drift situation, the left thick lane line and left thin line turn solid yellow. The LaneSense telltale changes from solid green to solid yellow. At this time torque is applied to the steering wheel in the opposite direction of the lane boundary.
- For example: If approaching the left side of the lane the steering wheel will turn to the right.

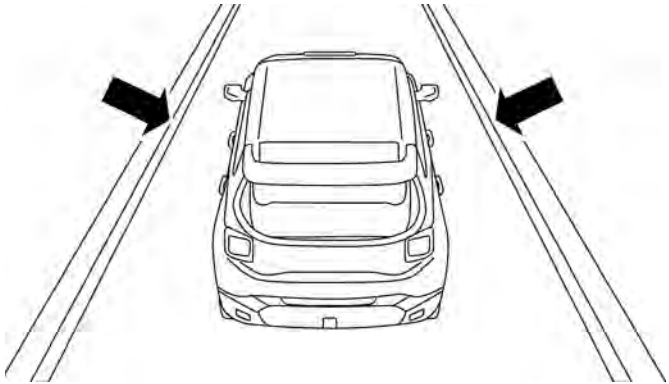

Lane Sensed (Solid Yellow Thick Line, Solid Yellow Thin Line/Solid Yellow Telltale)

- When the LaneSense system senses the lane has been approached and is in a lane departure situation, the left thick lane line flashes yellow (on/off) and the left thin line remains solid yellow. The LaneSense telltale changes from solid yellow to flashing yellow. At this time torque is applied to the steering wheel in the opposite direction of the lane boundary.

- For example: If approaching the left side of the lane the steering wheel will turn to the right.

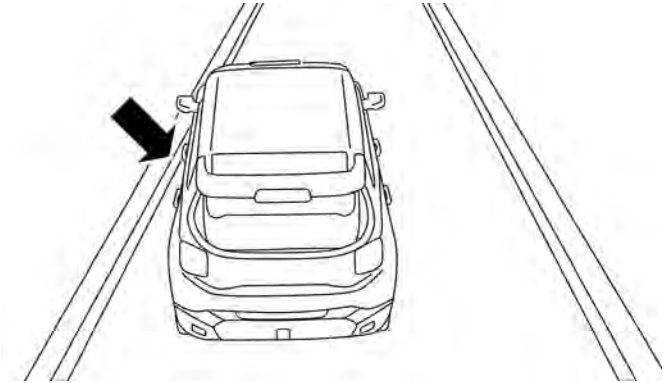

Lane Approached (Flashing Yellow Thick Line, Solid Yellow Thin Line/Flashing Yellow Telltale)

NOTE: The LaneSense system operates with the similar behavior for a right lane departure.

Changing LaneSense Status

The LaneSense system has settings to adjust the intensity of the torque warning and the warning zone sensitivity (early/late) that you can configure through the Uconnect system screen. Refer to "Uconnect Settings" in "Multimedia" for further information.

NOTE:

- When enabled the system operates above 37 mph (60 km/h) and below 112 mph (180 km/h).
- Use of the turn signal suppresses the warnings.
- The system will not apply torque to the steering wheel whenever a safety system engages (anti-lock brakes, traction control system, electronic stability control, forward collision warning, etc.).

REAR BACK UP CAMERA

The Rear Back Up Camera allows you to see an on-screen image of your vehicle's rear surroundings when the gear selector is put into REVERSE. The image will be displayed on the touchscreen display along with a note to "Check Entire Surroundings" across the top of the screen. After five seconds, this note will disappear. The camera is located above the rear license plate.

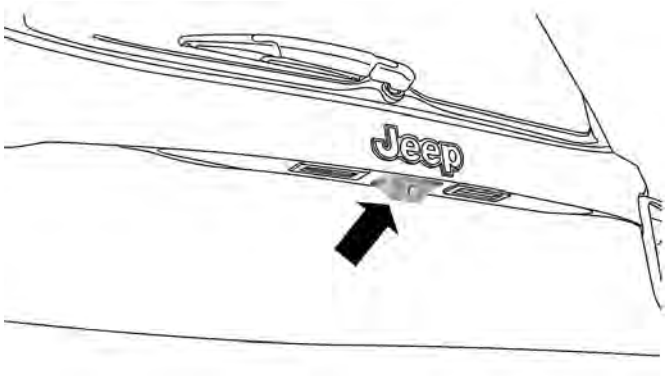

Parking Camera

When the vehicle is shifted out of REVERSE (with camera delay turned off), the rear camera mode is exited and the navigation or audio screen appears again.

When the vehicle is shifted out of REVERSE (with camera delay turned on), the camera image will continue to be displayed for up to 10 seconds after shifting out of REVERSE unless the vehicle speed exceeds 8 mph (13 km/h), the vehicle is shifted into PARK or the ignition is switched to the OFF position.

When the vehicle is shifted out of REVERSE, a touchscreen "X" button is overlapped to the camera image in order to disable the visualization earlier than 10 seconds.

When enabled, active guide lines are overlaid on the image to illustrate the width of the vehicle and its projected backup path based on the steering wheel position.

Different colored zones indicate the distance to the rear of the vehicle.

The following table shows the approximate distances for each zone:

Zone	Distance To The Rear Of The Vehicle
Red	0 - 1 ft (0 - 30 cm)
Yellow	1 ft - 3 ft (30 cm - 1 m)
Green	3 ft or greater (1 m or greater)

NOTE: If snow, ice, mud, or any foreign substance builds up on the camera lens, clean the lens, rinse with water, and dry with a soft cloth. Do not cover the lens.

WARNING!

Drivers must be careful when backing up even when using the Rear Back Up Camera. Always check carefully behind your vehicle, and be sure to check for pedestrians, animals, other vehicles, obstructions, or blind spots before backing up. You are responsible for the safety of your surroundings and must continue to pay attention while backing up. Failure to do so can result in serious injury or death.

CAUTION!

- **To avoid vehicle damage, Rear Back Up Camera should only be used as a parking aid. The Rear Back Up Camera is unable to view every obstacle or object in your drive path.**
- **To avoid vehicle damage, the vehicle must be driven slowly when using the Rear Back Up Camera to be able to stop in time when an obstacle is seen. It is recommended that the driver look frequently over his/her shoulder when using the Rear Back Up Camera.**

ADDING FUEL

The Capless Fuel System uses a flapper placed at the filler pipe of the fuel tank; it opens and closes automatically upon insertion/extraction of the fuel nozzle.

The Capless Fuel System is designed so that it prevents the filling of an incorrect type of fuel.

Opening The Door

For filling proceed as follows:

- Open the door, by pushing and releasing on the indentation point indicated by the arrow.

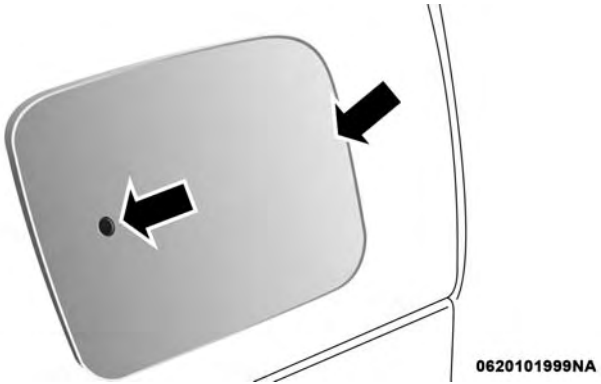

Fuel Filler Door

- Insert the fuel nozzle in the filler pipe and proceed with filling the fuel tank.

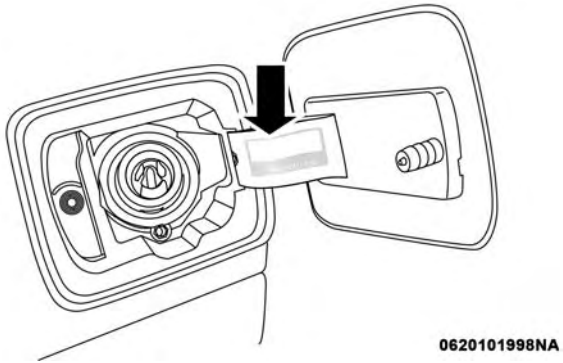

Filling Procedure

- Before removing the nozzle, wait at least 10 seconds to allow the fuel to flow inside of the tank.
- Pull the nozzle from the filler pipe and then close the door.

Emergency Refueling Procedure

If the vehicle is out of fuel proceed as follows:

- Open the liftgate and remove the emergency fuel fill funnel located in the cargo area.

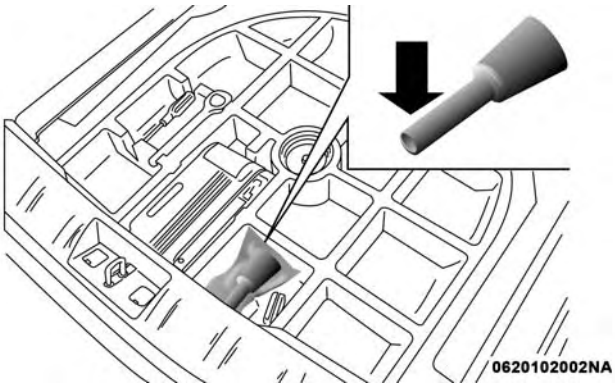

Emergency Fuel Fill Funnel

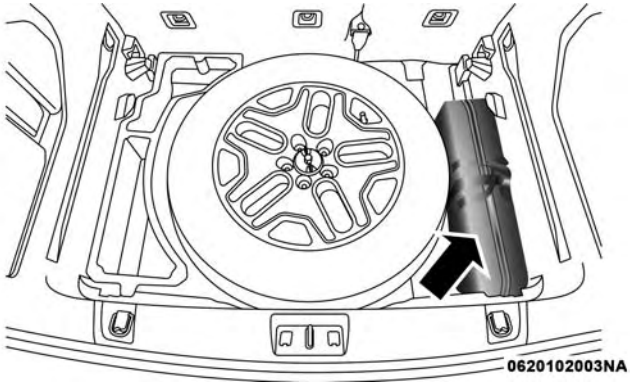

Emergency Fuel Fill Funnel – If Equipped With Full Size Spare Tire

- Open the fuel door.
- Insert the emergency fuel fill funnel in the filler pipe and proceed to fill the fuel tank.

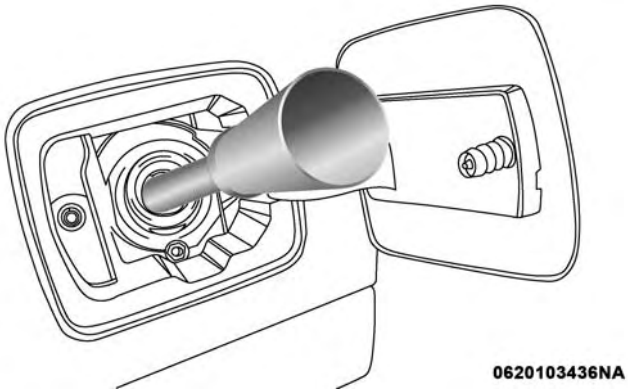

Fueling With Emergency Fuel Fill Funnel

- Remove the emergency fuel fill funnel, and close the door.
- Store the emergency fuel fill funnel in the cargo area.

WARNING!

- **Do not to affix objects/plugs to the end of the filler neck other than is provided on the car.**

(Continued)

WARNING! *(Continued)*

- **The use of objects/plugs do not comply with the vehicle and may cause pressure increases inside the tank, creating dangerous conditions.**
- **Do not approach the neck of the tank with open flames or lit cigarettes its an extreme fire hazard. Also, avoid close contact with the filler pipe with your face, do not inhale harmful vapors.**
- **Do not use your mobile phone in the vicinity of the pump fuel nozzle, it can be a possible risk of fire.**

VEHICLE LOADING

Certification Label

As required by National Highway Traffic Safety Administration regulations, your vehicle has a certification label affixed to the driver's side door or pillar.

This label contains the month and year of manufacture, Gross Vehicle Weight Rating (GVWR), Gross Axle Weight Rating (GAWR) front and rear, and Vehicle Identification Number (VIN). A Month-Day-Hour (MDH) number is included on this label and indicates the Month, Day and Hour of manufacture. The bar code that appears on the bottom of the label is your VIN.

Gross Vehicle Weight Rating (GVWR)

The GVWR is the total permissible weight of your vehicle including driver, passengers, vehicle, options and cargo. The label also specifies maximum capacities of front and rear axle systems (GAWR). Total load must be limited so GVWR and front and rear GAWR are not exceeded.

Payload

The payload of a vehicle is defined as the allowable load weight a truck can carry, including the weight of the driver, all passengers, options and cargo.

Gross Axle Weight Rating (GAWR)

The GAWR is the maximum permissible load on the front and rear axles. The load must be distributed in the cargo area so that the GAWR of each axle is not exceeded.

Each axle GAWR is determined by the components in the system with the lowest load carrying capacity (axle, springs, tires or wheels). Heavier axles or suspension components sometimes specified by purchasers for increased durability does not necessarily increase the vehicle's GVWR.

Tire Size

The tire size on the Vehicle Certification Label represents the actual tire size on your vehicle. Replacement tires must be equal to the load capacity of this tire size.

Rim Size

This is the rim size that is appropriate for the tire size listed.

Inflation Pressure

This is the cold tire inflation pressure for your vehicle for all loading conditions up to full GAWR.

Curb Weight

The curb weight of a vehicle is defined as the total weight of the vehicle with all fluids, including vehicle fuel, at full capacity conditions, and with no occupants or cargo loaded into the vehicle. The front and rear curb weight values are determined by weighing your vehicle on a commercial scale before any occupants or cargo are added.

Loading

The actual total weight and the weight of the front and rear of your vehicle at the ground can best be determined by weighing it when it is loaded and ready for operation.

The entire vehicle should first be weighed on a commercial scale to insure that the GVWR has not been exceeded. The weight on the front and rear of the vehicle should then be determined separately to be sure that the load is properly distributed over the front and rear axle. Weighing the vehicle may show that the GAWR of either the front or rear axles has been exceeded but the total load is within the specified GVWR. If so, weight must be shifted from front to rear or rear to front as appropriate until the specified weight limitations are met. Store the heavier items down low and be sure that the weight is distributed equally. Stow all loose items securely before driving.

Improper weight distributions can have an adverse effect on the way your vehicle steers and handles and the way the brakes operate.

CAUTION!

Do not load your vehicle any heavier than the GVWR or the maximum front and rear GAWR. If you do, parts on your vehicle can break, or it can change the way your vehicle handles. This could cause you to lose control. Also overloading can shorten the life of your vehicle.

TRAILER TOWING

In this section you will find safety tips and information on limits to the type of towing you can reasonably do with your vehicle. Before towing a trailer, carefully review this information to tow your load as efficiently and safely as possible.

To maintain the New Vehicle Limited Warranty coverage, follow the requirements and recommendations in this manual concerning vehicles used for trailer towing.

Common Towing Definitions

The following trailer towing related definitions will assist you in understanding the following information:

Gross Vehicle Weight Rating (GVWR)

The GVWR is the total allowable weight of your vehicle. This includes driver, passengers, cargo and tongue weight. The total load must be limited so that you do not exceed the GVWR. Refer to “Vehicle Loading/Vehicle Certification Label” in “Starting And Operating” for further information.

Gross Trailer Weight (GTW)

The GTW is the weight of the trailer plus the weight of all cargo, consumables and equipment (permanent or temporary) loaded in or on the trailer in its "loaded and ready for operation" condition.

The recommended way to measure GTW is to put your fully loaded trailer on a vehicle scale. The entire weight of the trailer must be supported by the scale.

Gross Combination Weight Rating (GCWR)

The GCWR is the total allowable weight of your vehicle and trailer when weighed in combination.

Gross Axle Weight Rating (GAWR)

The GAWR is the maximum capacity of the front and rear axles. Distribute the load over the front and rear axles evenly. Make sure that you do not exceed either front or rear GAWR. Refer to "Vehicle Loading/Vehicle Certification Label" in "Starting And Operating" for further information.

WARNING!

It is important that you do not exceed the maximum front or rear GAWR. A dangerous driving condition can result if either rating is exceeded.

Tongue Weight (TW)

The tongue weight is the downward force exerted on the hitch ball by the trailer. You must consider this as part of the load on your vehicle.

Frontal Area

The frontal area is the maximum height multiplied by the maximum width of the front of a trailer.

Trailer Sway Control — Mechanical

The trailer sway control is a telescoping link that can be installed between the hitch receiver and the trailer tongue that typically provides adjustable friction associated with the telescoping motion to dampen any unwanted trailer swaying motions while traveling.

Weight-Carrying Hitch

A weight-carrying hitch supports the trailer tongue weight, just as if it were luggage located at a hitch ball or some other connecting point of the vehicle. These kinds of hitches are the most popular on the market today and they are commonly used to tow small and medium sized trailers.

Weight-Distributing Hitch

A weight-distributing system works by applying leverage through spring (load) bars. They are typically used for heavier loads to distribute trailer tongue weight to the tow vehicle's front axle and the trailer axle(s). When used in accordance with the manufacturer's directions, it provides for a more level ride, offering more consistent steering and brake control thereby enhancing towing safety. The addition of a friction/hydraulic sway control also dampens sway caused by traffic and crosswinds and contributes positively to tow vehicle and trailer stability. Trailer sway control and a weight distributing (load equalizing) hitch are recommended for heavier Tongue Weights (TW) and may be required depending on vehicle and trailer configuration/loading to comply with Gross Axle Weight Rating (GAWR) requirements.

WARNING!

- **An improperly adjusted Weight Distributing Hitch system may reduce handling, stability, braking performance, and could result in a collision.**
- **Weight Distributing Systems may not be compatible with Surge Brake Couplers. Consult with your hitch and trailer manufacturer or a reputable Recreational Vehicle dealer for additional information.**

Trailer Hitch Classification

The following chart provides the industry standard for the maximum trailer weight a given trailer hitch class can tow and should be used to assist you in selecting the correct trailer hitch for your intended towing condition.

Trailer Hitch Classification Definitions	
Class	**Max. Trailer Hitch Industry Standards**
Class I - Light Duty	2,000 lbs (907 kg)
Class II - Medium Duty	3,500 lbs (1,587 kg)
Class III - Heavy Duty	5,000 lbs (2,267 kg)
Class IV - Extra Heavy Duty	10,000 lbs (4,535 kg)
Refer to the "Trailer Towing Weights (Maximum Trailer Weight Ratings)" chart for the Maximum Gross Trailer Weight (GTW) towable for your given drivetrain.	
All trailer hitches should be professionally installed on your vehicle.	

Trailer Towing Weights (Maximum Trailer Weight Ratings)

The following chart provides the maximum trailer weight ratings towable for your given drivetrain.

Engine	Max. GTW (Gross Trailer Wt.)	Max. Tongue Wt. (See Note)
1.3L Turbo	2000 lbs (906 kg)	200 lbs (90 kg)
2.4L	2000 lbs (906 kg)	200 lbs (90 kg)
Refer to local laws for maximum trailer towing speeds.		
NOTE: The trailer tongue weight must be considered as part of the combined weight of occupants and cargo and should never exceed the weight referenced on the Tire and Loading Information placard. Refer to "Tire Safety Information" in "Servicing And Maintenance" for further information.		

Trailer And Tongue Weight

Never exceed the maximum tongue weight stamped on your bumper or trailer hitch.

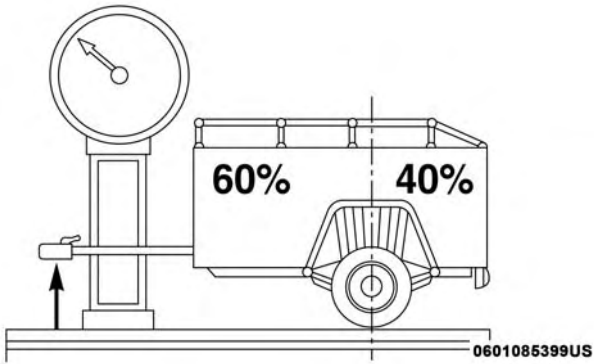

Consider the following items when computing the weight on the rear axle of the vehicle:

- The tongue weight of the trailer.
- The weight of any other type of cargo or equipment put in or on your vehicle.
- The weight of the driver and all passengers.

NOTE: Remember that everything put into or on the trailer adds to the load on your vehicle. Also, additional factory-installed options or dealer-installed options must be considered as part of the total load on your vehicle. Refer to the "Tire And Loading Information" placard for the maximum combined weight of occupants and cargo for your vehicle.

Towing Requirements

To promote proper break-in of your new vehicle drivetrain components, the following guidelines are recommended:

WARNING!

Improper towing can lead to a collision. Follow these guidelines to make your trailer towing as safe as possible:

- **Make certain that the load is secured in the trailer and that it will not shift during travel. When trailering cargo that is not fully secured, dynamic load shifts can occur that may be difficult for the driver to control. You could lose control of your vehicle and have a collision.**

(Continued)

WARNING! *(Continued)*

- **When hauling cargo, or towing a trailer, do not overload your vehicle or trailer. Overloading can cause a loss of control, poor performance, or damage to brakes, axle, engine, transmission, steering, suspension, chassis structure, or tires.**
- **Safety chains must always be used between your vehicle and trailer. Always connect the chains to the frame or hook retainers of the vehicle hitch. Cross the chains under the trailer tongue and allow enough slack for turning corners.**
- **Vehicles with trailers should not be parked on a grade. When parking, apply the parking brake on the tow vehicle. Put the tow vehicle transmission in PARK. Always block or "chock" the trailer wheels.**
- **GCWR must not be exceeded.**
- **Total weight must be distributed between the tow vehicle and the trailer such that the following four ratings are not exceeded:**

  1. GVWR

  2. GTW

  3. GAWR

  4. Tongue weight rating for the trailer hitch utilized.

CAUTION!

- **Do not tow a trailer at all during the first 500 miles (805 km) the new vehicle is driven. The engine, axle or other parts could be damaged.**
- **Then, during the first 500 miles (805 km) that a trailer is towed, do not drive over 50 mph (80 km/h) and do not make starts at full throttle. This helps the engine and other parts of the vehicle wear in at the heavier loads.**

Towing Requirements — Tires

- Do not attempt to tow a trailer while using a compact spare tire.
- Proper tire inflation pressures are essential to the safe and satisfactory operation of your vehicle. Refer to "Tires – General Information" in "Serving And Maintenance" for proper tire inflation procedures.
- Check the trailer tires for proper tire inflation pressures before trailer usage.
- Check for signs of tire wear or visible tire damage before towing a trailer. Refer to "Tires – General Information" in "Serving And Maintenance" for the proper inspection procedure.

- When replacing tires, refer to "Tires – General Information" in "Serving And Maintenance" for the proper tire replacement procedures. Replacing tires with a higher load carrying capacity will not increase the vehicle's GVWR and GAWR limits.

Towing Requirements — Trailer Brakes

- Do **not** interconnect the hydraulic brake system or vacuum system of your vehicle with that of the trailer. This could cause inadequate braking and possible personal injury.
- An electronically actuated trailer brake controller is required when towing a trailer with electronically actuated brakes. When towing a trailer equipped with a hydraulic surge actuated brake system, an electronic brake controller is not required.
- Trailer brakes are recommended for trailers over 1,000 lbs (453 kg) and required for trailers in excess of 2,000 lbs (907 kg).

WARNING!

- **Do not connect trailer brakes to your vehicle's hydraulic brake lines. It can overload your brake system and cause it to fail. You might not have brakes when you need them and could have a collision.**
- **Towing any trailer will increase your stopping distance. When towing you should allow for additional space between your vehicle and the vehicle in front of you. Failure to do so could result in a collision.**

CAUTION!

If the trailer weighs more than 1,000 lbs (453 kg) loaded, it should have its own brakes and they should be of adequate capacity. Failure to do this could lead to accelerated brake lining wear, higher brake pedal effort, and longer stopping distances.

Towing Requirements — Trailer Lights And Wiring (If Equipped)

Whenever you pull a trailer, regardless of the trailer size, stoplights and turn signals on the trailer are required for motoring safety.

The Trailer Tow Package may include a four- and seven-pin wiring harness. Use a factory approved trailer harness and connector.

NOTE: Do not cut or splice wiring into the vehicles wiring harness.

The electrical connections are all complete to the vehicle but you must mate the harness to a trailer connector. Refer to the following illustrations.

NOTE:

- Disconnect trailer wiring connector from the vehicle before launching a boat (or any other device plugged into vehicle's electrical connect) into water.
- Be sure to reconnect after clear from water area.

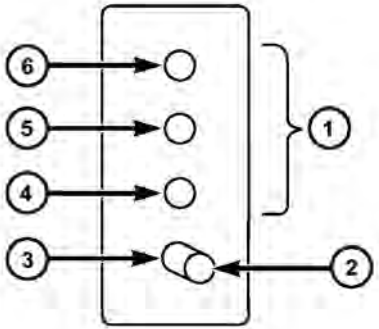

Four-Pin Connector

1 — Female Pins	4 — Park
2 — Male Pin	5 — Left Stop/Turn
3 — Ground	6 — Right Stop/Turn

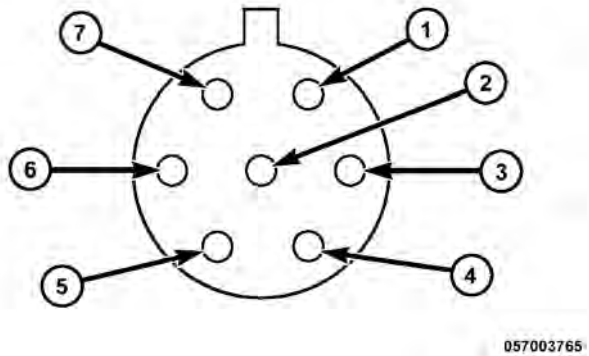

Seven-Pin Connector

1 — Battery
2 — Backup Lamps
3 — Right Stop/Turn
4 — Electric Brakes
5 — Ground
6 — Left Stop/Turn
7 — Running Lamps

Towing Tips

Before setting out on a trip, practice turning, stopping, and backing the trailer in an area located away from heavy traffic.

Automatic Transmission — If Equipped

Select the DRIVE range when towing. The transmission controls include a drive strategy to avoid frequent shifting when towing. However, if frequent shifting does occur while in DRIVE, you can use the AutoStick shift control to manually select a lower gear.

NOTE: Using a lower gear while operating the vehicle under heavy loading conditions will improve performance and extend transmission life by reducing excessive shifting and heat build up. This action will also provide better engine braking.

AutoStick

- When using the AutoStick shift control, select the highest gear that allows for adequate performance and avoids frequent downshifts. For example, choose “5” if the desired speed can be maintained. Choose “4” or “3” if needed to maintain the desired speed.
- To prevent excess heat generation, avoid continuous driving at high RPM. Reduce vehicle speed as necessary to avoid extended driving at high RPM. Return to a higher gear or vehicle speed when grade and road conditions allow.

Speed Control — If Equipped

- Do not use in hilly terrain or with heavy loads.
- When using the speed control, if you experience speed drops greater than 10 mph (16 km/h), disengage until you can get back to cruising speed.
- Use speed control in flat terrain and with light loads to maximize fuel efficiency.

Cooling System

To reduce potential for engine and transmission overheating, take the following actions:

City Driving

When stopped for short periods of time, shift the transmission into NEUTRAL and increase engine idle speed.

Highway Driving

Reduce speed.

Air Conditioning

Turn off temporarily.

RECREATIONAL TOWING

Towing This Vehicle Behind Another Vehicle

TOWING CONDITION	WHEELS OFF THE GROUND	FRONT WHEEL DRIVE (FWD)	FOUR-WHEEL DRIVE (4WD)
Flat Tow	NONE	NOT ALLOWED	NOT ALLOWED
Dolly Tow	REAR	NOT ALLOWED	NOT ALLOWED
	FRONT	OK	NOT ALLOWED
On Trailer	ALL	BEST METHOD	OK

NOTE:

- When towing your vehicle, always follow applicable state and provincial laws. Contact state and provincial Highway Safety offices for additional details.
- You must ensure that the Auto Park Brake feature is disabled before towing this vehicle, to avoid inadvertent Electric Park Brake engagement. The Auto Park Brake feature is enabled or disabled via the customer programmable features in the Uconnect Settings.

Recreational Towing

Models With Front-Wheel Drive (FWD)

Recreational towing is allowed ONLY if the front wheels are OFF the ground. This may be accomplished using a tow dolly (front wheels off the ground) or vehicle trailer (all four wheels off the ground). If using a tow dolly, follow this procedure:

- Properly secure the dolly to the tow vehicle, following the dolly manufacturer's instructions.
- Drive the front wheels onto the tow dolly.
- Apply the Electric Park Brake (EPB). Place the transmission in PARK. Turn the engine OFF.
- Properly secure the front wheels to the dolly, following the dolly manufacturer's instructions.
- Turn the ignition to the RUN mode, but do not start the engine.
- Press and hold the brake pedal.
- Release the Electric Park Brake (EPB).
- Turn the ignition OFF, and release the brake pedal.

CAUTION!

- **DO NOT flat tow this vehicle. Damage to the drivetrain will result. If this vehicle requires towing, make sure the drive wheels are OFF the ground.**
- **Ensure that the Electric Park Brake is released, and remains released, while being towed.**
- **Towing this vehicle in violation of the above requirements can cause severe transmission damage. Damage from improper towing is not covered under the New Vehicle Limited Warranty.**

Models With Four-Wheel Drive (4WD)

Recreational towing (with all four wheels on the ground, or using a towing dolly) is NOT ALLOWED. This vehicle may be towed on a flatbed or vehicle trailer provided all four wheels are OFF the ground.

CAUTION!

Towing this vehicle with ANY of its wheels on the ground can cause severe transmission and/or power transfer unit damage. Damage from improper towing is not covered under the New Vehicle Limited Warranty.

DRIVING TIPS

On-Road Driving Tips

Utility vehicles have higher ground clearance and a narrower track to make them capable of performing in a wide variety of off-road applications. Specific design characteristics give them a higher center of gravity than conventional passenger cars.

An advantage of the higher ground clearance is a better view of the road, allowing you to anticipate problems. They are not designed for cornering at the same speeds as conventional passenger cars any more than low-slung sports cars are designed to perform satisfactorily in off-road conditions. Avoid sharp turns or abrupt maneuvers. As with other vehicles of this type, failure to operate this vehicle correctly may result in loss of control or vehicle rollover.

Off-Road Driving Tips

When To Use 4WD LOW Range

When off-road driving, shift to 4WD LOW for additional traction and control on slippery or difficult terrain, ascending or descending steep hills, and to increase low-speed pulling power (refer to “Four Wheel Drive” in this section for further details). This range should be limited to extreme situations such as deep snow, mud, or sand where additional low speed pulling power is needed. Vehicle speeds in excess of 25 mph (40 km/h) should be avoided when in 4WD LOW range.

Driving Through Water

Although your vehicle is capable of driving through water, there are a number of precautions that must be considered before entering the water:

CAUTION!

When driving through water, do not exceed 5 mph (8 km/h). Always check water depth before entering as a precaution, and check all fluids afterward. Driving through water may cause damage that may not be covered by the New Vehicle Limited Warranty.

Driving through water more than a few inches/centimeters deep will require extra caution to ensure safety and prevent damage to your vehicle. If you must drive through water, try to determine the depth and the bottom condition (and location of any obstacles) prior to entering. Proceed with caution and maintain a steady controlled speed less than 5 mph (8 km/h) in deep water to minimize wave effects.

Flowing Water

If the water is swift flowing and rising (as in storm run-off) avoid crossing until the water level recedes and/or the flow rate is reduced. If you must cross flowing-water, avoid depths in excess of 9 inches (22 cm). The flowing water can erode the streambed causing your vehicle to sink into deeper water. Determine exit point(s) that are downstream of your entry point to allow for drifting.

Standing Water — Trailhawk Only

Avoid driving in standing water deeper than 19 inches (48 cm), and reduce speed appropriately to minimize wave effects. Maximum speed in 19 inches (48 cm) of water is less than 5 mph (8 km/h).

Maintenance

After driving through deep water, inspect your vehicle fluids and lubricants (engine, transmission, Power Transfer Unit and Rear Drive Module) to assure they have not been contaminated. Contaminated fluids and lubricants (milky, foamy in appearance) should be flushed/changed as soon as possible to prevent component damage.

Driving In Snow, Mud And Sand

In heavy snow, when pulling a load, or for additional control at slower speeds, shift the transmission to a low gear and shift the 4WD system to the appropriate terrain mode, using 4WD LOW if necessary. Refer to “Four Wheel

Drive" in "Starting And Operating" for further information. Do not shift to a lower gear than necessary to maintain headway. Over-revving the engine can spin the wheels and traction will be lost.

Avoid abrupt downshifts on icy or slippery roads because engine braking may cause skidding and loss of control.

Hill Climbing

NOTE: Before attempting to climb a hill, determine the conditions at the crest and/or on the other side.

Before climbing a steep hill, shift the transmission to a lower gear and shift the 4WD System to 4WD LOW. Use first gear and 4WD LOW for very steep hills.

If you stall or begin to lose headway while climbing a steep hill, allow your vehicle to come to a stop and immediately apply the brakes. Restart the engine and shift to REVERSE. Back slowly down the hill allowing the compression braking of the engine to help regulate your speed. If the brakes are required to control vehicle speed, apply them lightly and avoid locking or skidding the tires.

WARNING!

If the engine stalls or you lose headway or cannot make it to the top of a steep hill or grade, never attempt to turn around. To do so may result in tipping and rolling the vehicle. Always back straight down a hill in REVERSE gear carefully. Never back down a hill in NEUTRAL using only the brake.

NOTE: Remember, never drive diagonally across a hill - drive straight up or down.

If the wheels start to slip as you approach the crest of a hill, ease off the accelerator and maintain headway by turning the front wheels slowly left and right. This may provide a fresh "bite" into the surface and will usually provide traction to complete the climb.

Traction Downhill

Shift the transmission into a low gear and the 4WD System to 4WD LOW range or Select Hill Descent Control if equipped (refer to "Electronic Brake Control System" in this section for further information). Let the vehicle go slowly down the hill with all four wheels turning against engine compression drag. This will permit you to control the vehicle speed and direction.

When descending mountains or hills, repeated braking can cause brake fade with loss of braking control. Avoid repeated heavy braking by downshifting the transmission whenever possible.

After Driving Off-Road

Off-road operation puts more stress on your vehicle than does most on-road driving. After going off-road, it is always a good idea to check for damage. That way you can get any problems taken care of right away and have your vehicle ready when you need it.

- Completely inspect the underbody of your vehicle. Check tires, body structure, steering, suspension, and exhaust system for damage.
- Inspect the radiator for mud and debris and clean as required.
- Check threaded fasteners for looseness, particularly on the chassis, drivetrain components, steering, and suspension. Retighten them, if required, and torque to the values specified in the Service Manual.
- Check for accumulations of plants or brush. These things could be a fire hazard. They might hide damage to fuel lines, brake hoses, axle pinion seals, and propeller shafts.
- After extended operation in mud, sand, water, or similar dirty conditions, have the radiator, fan, brake rotors, wheels, brake linings, and axle yokes inspected and cleaned as soon as possible.

WARNING!

Abrasive material in any part of the brakes may cause excessive wear or unpredictable braking. You might not have full braking power when you need it to prevent a collision. If you have been operating your vehicle in dirty conditions, get your brakes checked and cleaned as necessary.

- If you experience unusual vibration after driving in mud, slush or similar conditions, check the wheels for impacted material. Impacted material can cause a wheel imbalance and freeing the wheels of it will correct the situation.

IN CASE OF EMERGENCY

CONTENTS

■ HAZARD WARNING FLASHERS 367
■ ASSIST AND SOS SYSTEM — IF EQUIPPED 367
■ BULB REPLACEMENT 372
- □ General Information 372
- □ Replacement Bulbs 373
- □ Replacing Exterior Bulbs 374
- □ Replacing Interior Bulbs 388

■ FUSES 393
- □ General Information 394
- □ Access To The Fuses 394
- □ Engine Compartment Fuses/Distribution Unit . .395
- □ Body Computer Fuse Center 400
- □ Rear Cargo Fuse/Relay Distribution Unit 403

■ JACKING AND TIRE CHANGING 405
- □ Jack Location/Spare Tire Stowage 405
- □ Preparations For Jacking 406
- □ Jacking Instructions 407
- □ Road Tire Installation 412

■ TIRE SERVICE KIT — IF EQUIPPED 413
- □ Tire Service Kit Storage 413
- □ Tire Service Kit Components And Operation . . .413
- □ Tire Service Kit Usage Precautions 415
- □ Replacing The Sealant 416

■ JUMP STARTING 416
- □ Preparations For Jump Start 417
- □ Jump Starting Procedure 418

■ REFUELING IN EMERGENCY 419
■ IF YOUR ENGINE OVERHEATS 419

■ GEAR SELECTOR OVERRIDE 420
■ FREEING A STUCK VEHICLE 422
■ TOWING A DISABLED VEHICLE 423
□ Front Wheel Drive (FWD) 424
□ Four Wheel Drive (4WD) 425
□ Emergency Tow Hooks — If Equipped 426
■ ENHANCED ACCIDENT RESPONSE SYSTEM (EARS) 427
■ EVENT DATA RECORDER (EDR) 427

HAZARD WARNING FLASHERS

The Hazard Warning flasher switch is located on the switch bank below the radio.

Push the switch to turn on the Hazard Warning Flasher. When the switch is activated, all directional turn signals will flash on and off to warn oncoming traffic of an emergency. Push the switch a second time to turn off the Hazard Warning flashers.

This is an emergency warning system and it should not be used when the vehicle is in motion. Use it when your vehicle is disabled and it is creating a safety hazard for other motorists.

When you must leave the vehicle to seek assistance, the Hazard Warning flashers will continue to operate even though the ignition is placed in OFF mode.

NOTE: With extended use the Hazard Warning flashers may wear down your battery.

ASSIST AND SOS SYSTEM — IF EQUIPPED

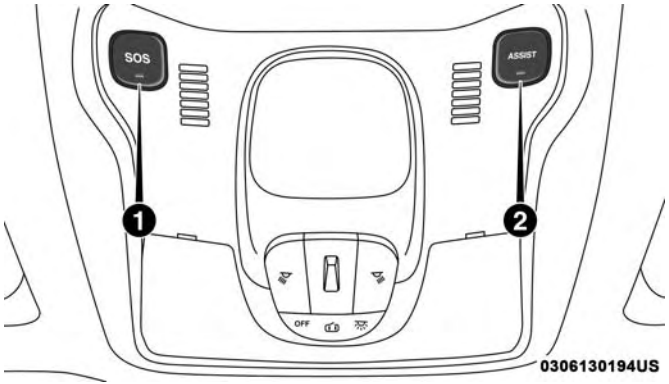

Assist And SOS Buttons

1 — SOS Button
2 — ASSIST Button

If equipped, the overhead console contains an ASSIST and a SOS button.

WARNING!

ALWAYS obey traffic laws and pay attention to the road. ALWAYS drive safely with your hands on the steering wheel. You have full responsibility and assume all risks related to the use of the features and applications in this vehicle. Only use the features and applications when it is safe to do so. Failure to do so may result in an accident involving serious injury or death.

NOTE:

- Your vehicle may be transmitting data as authorized by the subscriber.
- The SOS and ASSIST buttons will only function if you are connected to an operable LTE (voice/data) or 4G (data) network. Other Uconnect services will only be operable if your SiriusXM Guardian service is active and you are connected to an operable LTE (voice/data) or 4G (data) network.

ASSIST Call

The ASSIST Button is used to automatically connect you to any one of the following support centers:

- Roadside Assistance – If you get a flat tire, or need a tow, just push the ASSIST button and you'll be connected to someone who can help. Roadside Assistance will know what vehicle you're driving and its location. Additional fees may apply for roadside assistance.
- SiriusXM Guardian Customer Care – In-vehicle support for SiriusXM Guardian.
- Vehicle Customer Care – Total support for all other vehicle issues.

SOS Call

1. Push the SOS Call button on the overhead console.

NOTE: In case the SOS Call button is pushed in error, there will be a ten second delay before the SOS Call system initiates a call to a SOS operator. To cancel the SOS Call connection, push the SOS call button on the overhead console or press the cancellation button on the Device Screen. Termination of the SOS Call will turn off the green LED light on the overhead console.

2. The LED light located between the ASSIST and SOS buttons on the overhead console will turn green once a connection to a SOS operator has been made.
3. Once a connection between the vehicle and a SOS operator is made, the SOS Call system may transmit the following important vehicle information to a SOS operator:
   - Indication that the occupant placed a SOS Call.
   - The vehicle brand.
   - The last known GPS coordinates of the vehicle.
4. You should be able to speak with the SOS operator through the vehicle audio system to determine if additional help is needed.

WARNING!

ALWAYS obey traffic laws and pay attention to the road. ALWAYS drive safely with your hands on the steering wheel. You have full responsibility and assume all risks related to the use of the features and applications in this vehicle. Only use the features and applications when it is safe to do so. Failure to do so may result in an accident involving serious injury or death.

NOTE:

- Your vehicle may be transmitting data as authorized by the subscriber.
- Once a connection is made between the vehicle's SOS Call system and the SOS operator, the SOS operator may be able to open a voice connection with the vehicle to determine if additional help is needed. Once the SOS operator opens a voice connection with the vehicle's SOS Call system, the operator should be able to speak with you or other vehicle occupants and hear sounds occurring in the vehicle. The vehicle's SOS Call system will attempt to remain connected with the SOS operator until the SOS operator terminates the connection.

5. The SOS operator may attempt to contact appropriate emergency responders and provide them with important vehicle information and GPS coordinates.

WARNING!

- **If anyone in the vehicle could be in danger (e.g., fire or smoke is visible, dangerous road conditions or location), do not wait for voice contact from an Emergency Services Agent. All occupants should exit the vehicle immediately and move to a safe location.**
- **Never place anything on or near the vehicle's operable network and GPS antennas. You could prevent operable network and GPS signal reception, which can prevent your vehicle from placing an emergency call. An operable network and GPS signal reception is required for the SOS Call system to function properly.**
- **The SOS Call system is embedded into the vehicle's electrical system. Do not add aftermarket electrical equipment to the vehicle's electrical system. This may prevent your vehicle from sending a signal to initiate an emergency call. To avoid interference that can cause the SOS Call system to fail, never add aftermarket equipment (e.g., two-way mobile radio, CB radio, data recorder, etc.) to your vehicle's electrical system or modify the antennas on your vehicle. IF YOUR VEHICLE LOSES BATTERY POWER FOR**

(Continued)

WARNING! *(Continued)*

ANY REASON (INCLUDING DURING OR AFTER AN ACCIDENT), THE UCONNECT FEATURES, APPS AND SERVICES, AMONG OTHERS, WILL NOT OPERATE.

- **Modifications to any part of the SOS Call system could cause the air bag system to fail when you need it. You could be injured if the air bag system is not there to help protect you.**

SOS Call System Limitations

Vehicles sold in Mexico **DO NOT** have SOS Call system capabilities.

SOS or other emergency line operators in Mexico may not answer or respond to SOS system calls.

If the SOS Call system detects a malfunction, any of the following may occur at the time the malfunction is detected, and at the beginning of each ignition cycle:

- The overhead console light located between the ASSIST and SOS buttons will continuously be illuminated red.
- The Device Screen will display the following message: "Vehicle device requires service. Please contact your dealer."

- An In-Vehicle Audio message will state "Vehicle device requires service. Please contact your dealer."

WARNING!

- **Ignoring the overhead console light could mean you will not have SOS Call services. If the overhead console light is illuminated, have your authorized dealer service the SOS Call system immediately.**
- **The Occupant Restraint Control module turns on the air bag Warning Light on the instrument panel if a malfunction in any part of the system is detected. If the Air Bag Warning Light is illuminated, have your authorized dealer service the Occupant Restraint Control system immediately.**

Even if the SOS Call system is fully functional, factors beyond FCA US LLC's control may prevent or stop the SOS Call system operation. These include, but are not limited to, the following factors:

- Delayed accessories mode is active.
- The ignition is in the OFF position.
- The vehicle's electrical systems are not intact.
- The SOS Call system software and/or hardware are damaged during a crash.
- The vehicle battery loses power or becomes disconnected during a vehicle crash.
- LTE (voice/data) or 4G (data) network and/or Global Positioning Satellite signals are unavailable or obstructed.
- Equipment malfunction at the SOS operator facility.
- Operator error by the SOS operator.
- LTE (voice/data) or 4G (data) network congestion.
- Weather.
- Buildings, structures, geographic terrain, or tunnels.

WARNING!

ALWAYS obey traffic laws and pay attention to the road. ALWAYS drive safely with your hands on the steering wheel. You have full responsibility and assume all risks related to the use of the features and applications in this vehicle. Only use the features and applications when it is safe to do so. Failure to do so may result in an accident involving serious injury or death.

NOTE:

- Your vehicle may be transmitting data as authorized by the subscriber.
- Never place anything on or near the vehicle's LTE (voice/data) or 4G (data) and GPS antennas. You could prevent LTE (voice/data) or 4G (data) and GPS signal reception, which can prevent your vehicle from placing an emergency call. An operable LTE (voice/data) or 4G (data) network connection and a GPS signal is required for the SOS Call system to function properly.

General Information

This device complies with Part 15 of the FCC Rules. Operation is subject to the following two conditions: (1) This device may not cause harmful interference, and (2) this device must accept any interference received, including interference that may cause undesired operation.

NOTE: Changes or modifications not expressly approved by the party responsible for compliance could void the user's authority to operate the equipment.

BULB REPLACEMENT

General Information

- Before you replace a bulb, check the contacts to be sure they are not oxidized.
- Replace the bulbs with the same type and wattage.
- After replacing a light bulb, always check the correct orientation.
- Before replacing a bulb that is not functioning, check that the fuse is intact.

NOTE: Lens fogging can occur under certain atmospheric conditions. This will usually clear as atmospheric conditions change to allow the condensation to change back into a vapor. Turning the lamps on will usually accelerate the clearing process.

Replacement Bulbs

Interior Bulbs

Lamps	Bulb Number
Front Courtesy Light	C5W
Front Courtesy Lights (Sun Visors)	C5W
Rear Dome Light (Models Without Retractable Roof)	C5W
Rear Interior Lights (Models With Retractable Roof)	C5W
Interior Lights	W5W
Dome Light (Glove Compartment)	W5W

Exterior Bulbs

Lamps	Bulb Number
Low Beam/High Beam Headlamps (LED Version)	LED (Serviced At An Authorized Dealer)
Low Beam/High Beam Headlamps	H13
Front Position/Daytime Running Lights (DRL)/Front Turn Indicator	PY24W
Front Direction Indicator Lamps (If Equipped With LED Headlamps)	PY24W
Front Fog Lamps	H11
Front Fog Lamps (LED Versions)	LED (Serviced At An Authorized Dealer)
Side Indicators (Front And Side View Mirror)	WY5W

Lamps	Bulb Number
Tail/Brake Lights/Turn Indicators (LED Versions)	LED (Serviced At An Authorized Dealer)
Tail/Brake Lights/Turn Indicators	P21W
Center High Mounted Stop Lamp (CHMSL)	LED (Serviced At An Authorized Dealer)
Reverse	W16W
License Plate Lamp	W5W

Replacing Exterior Bulbs

CAUTION!

During bulb replacement do not touch the new glass bulb with your fingers. Oil contamination will severely shorten bulb life. If the bulb comes in contact with any oily surface, clean the bulb with rubbing alcohol.

Headlamps

Hi/Lo Beam Light Halogen

To replace the bulbs proceed as follows:

1. Open the engine compartment and remove the headlamp bulb cap.

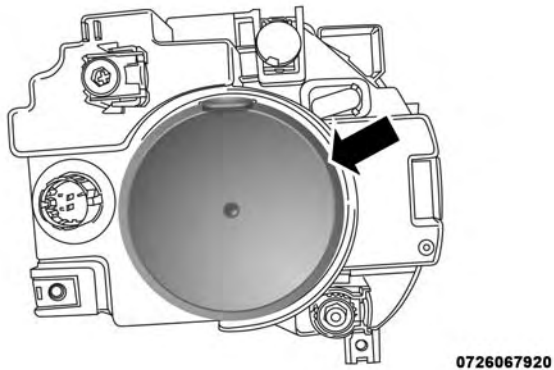

Headlamp Bulb Cap

2. Rotate the headlamp bulb socket counterclockwise then pull outwards.

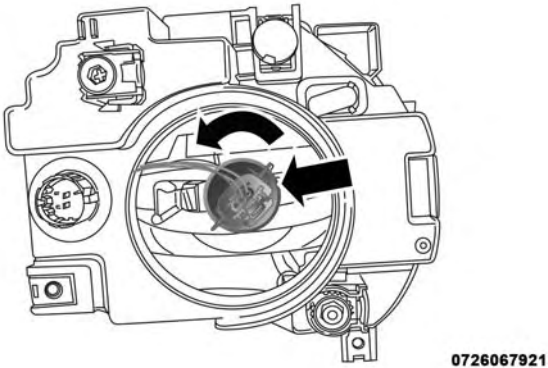

Headlamp Bulb Socket

3. Push on the locking tab on the headlamp bulb connector and remove the bulb and socket.

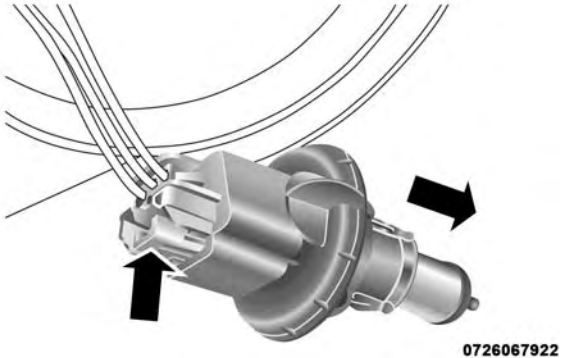

Headlamp Bulb Connector

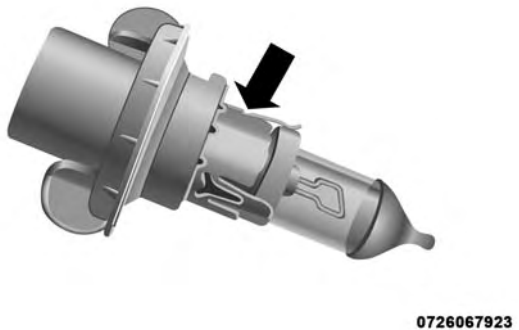

Headlamp Bulb

4. Install the new headlamp bulb making sure it is properly locked.
5. Install the headlamp bulb and socket; turn it clockwise making sure it is properly locked.

WARNING!
Carry out the operation of replacing lamps only with the engine off. Also make sure that the engine is cold, to avoid the danger of burns.

LED Headlamps – If Equipped

For replacement see an authorized dealer.

Position Lights/Daytime Running Lights/Fog Lights

To replace the bulbs proceed as follows:

1. Turn the front wheels completely.
2. Use a suitable tool to remove the access door.

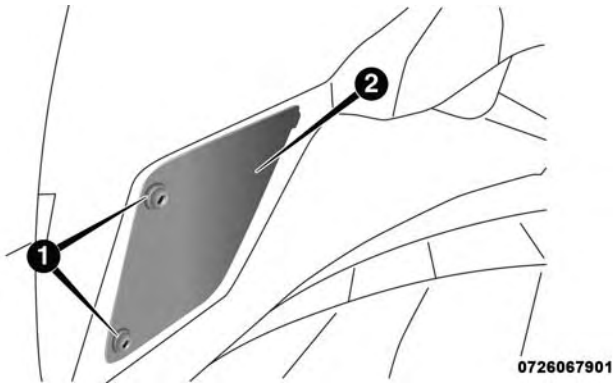

Position Light/Daytime Running Light/Fog Light Access

1 — Screws
2 — Access Door

3. Remove the electrical connector.
4. Releasing the two tabs, and remove the bulb and bulb socket from the housing.

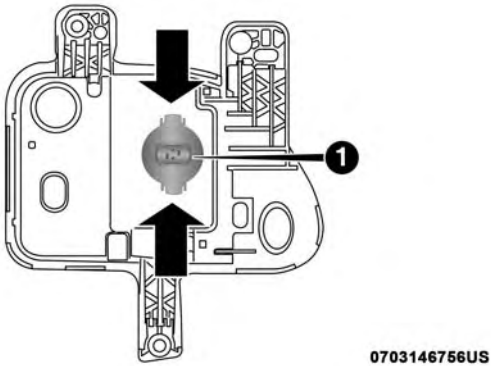

Position Light/Daytime Running Light Assembly

1 — Bulb Socket

5. Install the new bulb and socket into the housing, and engage the two tabs, making sure that it is properly locked.
6. Reconnect the electrical connector.
7. Reinstall the access door.

Front Fog Lights

To replace the bulbs proceed as follows:

1. Turn the front wheels completely.
2. Use a suitable tool to remove the access door.

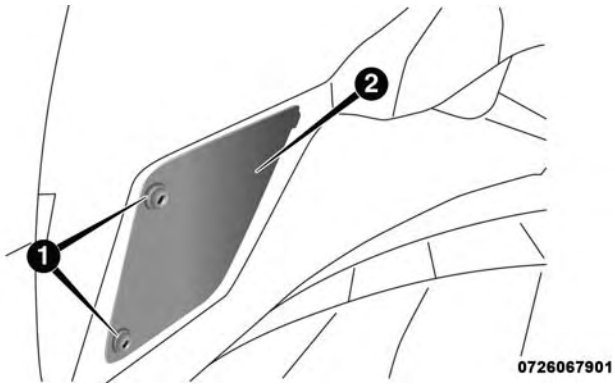

Position Light/Daytime Running Light/Fog Light Access

1 — Screws
2 — Access Door

3. By pushing the electrical connector tab remove the electrical connector.

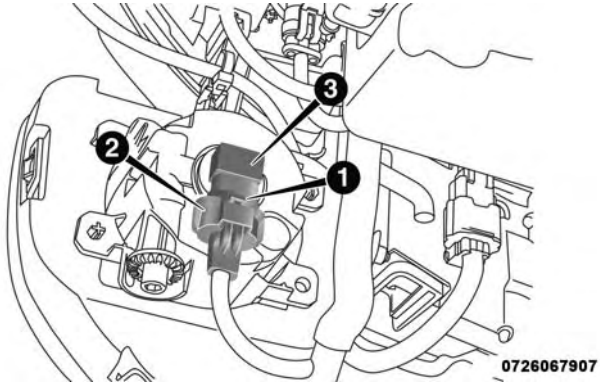

Fog Light Assembly

1 — Bulb Socket
2 — Electrical Connector
3 — Bulb

4. Rotate the bulb counterclockwise, and then replace the bulb.
5. Insert the new bulb in the socket, making sure the bulb is locked into place.
6. Reconnect the electrical connector.
7. Reinstall the access door.

LED Front Fog Lamps – If Equipped

For replacement see an authorized dealer.

Side Indicators

Front Side Indicators

To replace the bulb proceed as follows:

1. Operating from inside the engine compartment using a suitable tool release the retaining clip.

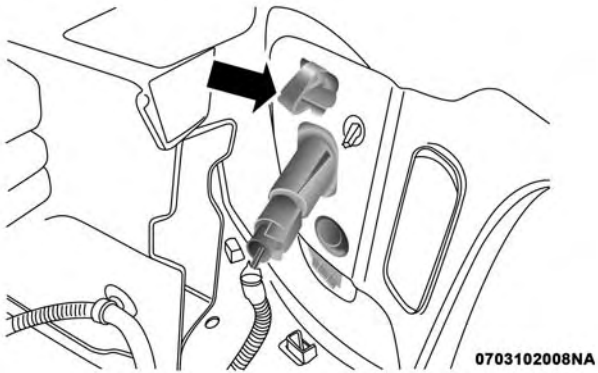

Lamp Retaining Clip

2. Remove lamp assembly by sliding it toward the outside.

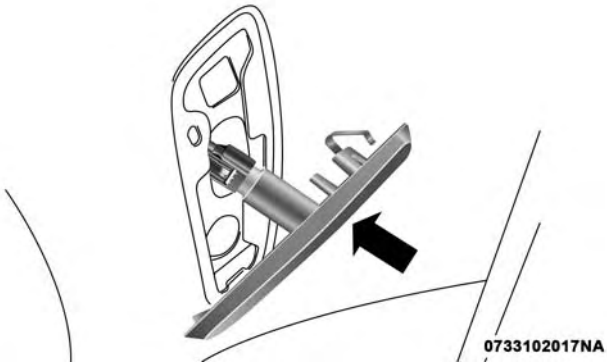

Lamp Assembly

3. Remove the electrical connector by pushing the tab then disconnect the electrical connector.

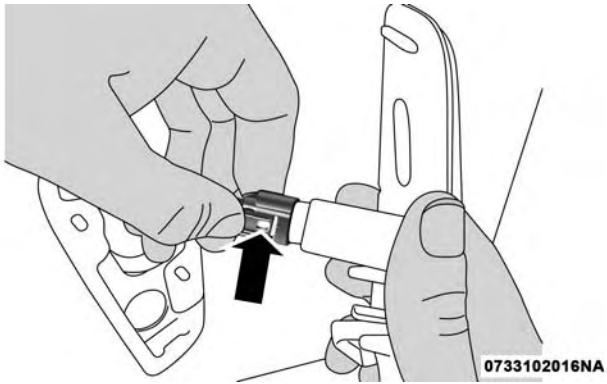

Electrical Connector

4. Rotate counterclockwise to release the bulb socket from the lamp assembly, and remove it.

Bulb Socket

5. Remove the bulb from the socket.

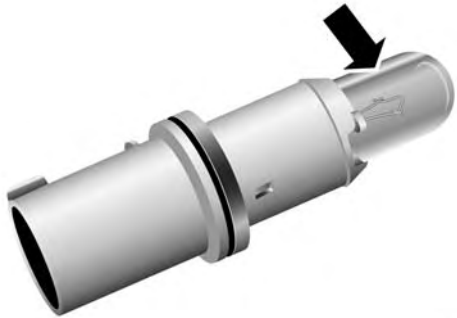

Bulb

6. Insert the new bulb in the socket.
7. Reinstall the bulb and socket into the lamp assembly by turning it clockwise, making sure it is locked into place.
8. Reconnect the electrical connector.
9. Reinstall the lamp assembly on the car, making sure it is locked into place.

Side Indicators on External Rear View Mirrors – (If Equipped)

CAUTION!
The procedure is described as a guideline. For the replacement of the lamp it is recommended that you contact your authorized dealer.

To replace the bulb proceed as follows:

1. Remove the mirror cap on the outside rear view mirror.

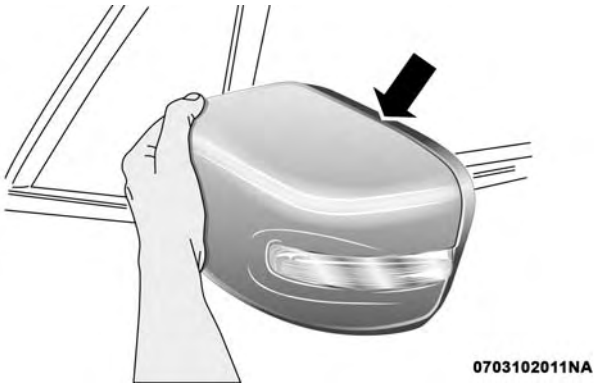

Mirror Cap

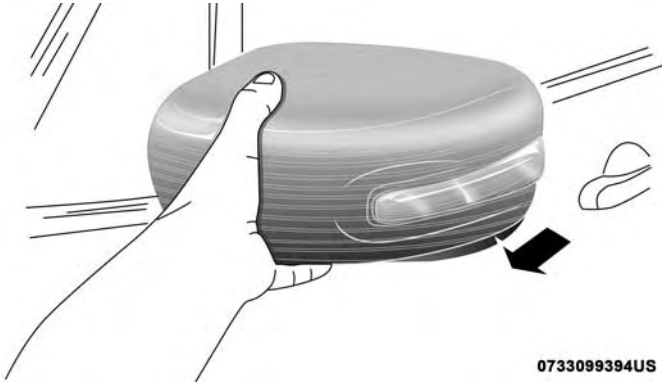

Removing the mirror cap

2. Remove the transparent lens assembly as shown.

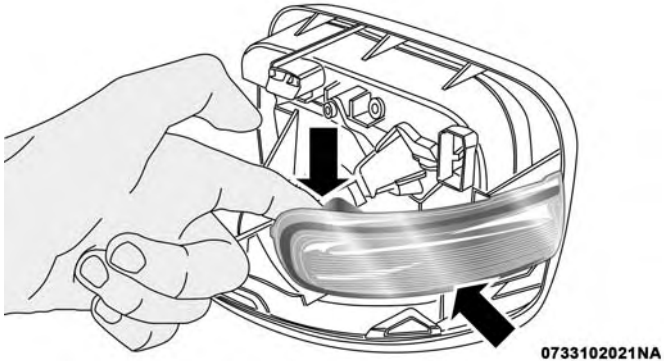

Transparent Lens

3. Remove the bulb socket and bulb from the transparent lens assembly by rotating the socket counterclockwise.

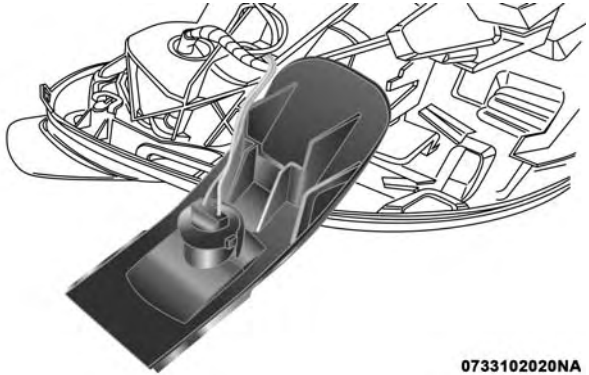

Transparent Lens Assembly

4. Remove the bulb from the bulb socket by pulling the bulb straight out.

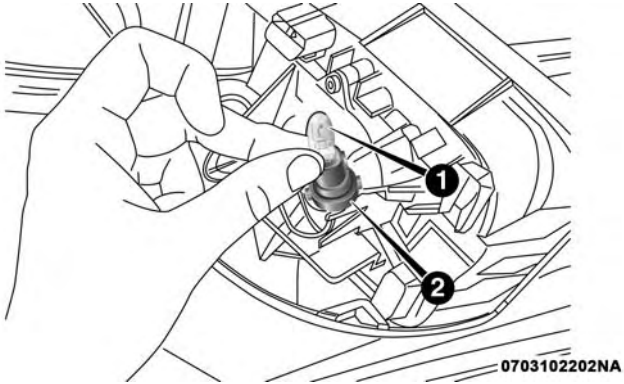

Bulb And Socket Assembly

1 — Bulb
2 — Bulb Socket

5. Insert the new bulb, making sure that it is locked into place.
6. Reinstall the socket in to the transparent lens assembly.
7. Reinstall the cover on the outside rear view mirror, making sure it is locked into place.

Rear Tail Lamps

Contain the following:

- Position lights
- Stop lights
- Direction indicator
- REVERSE lights

To replace the bulbs proceed as follows:

1. Open the liftgate.
2. Using a suitable tool remove the door as shown.

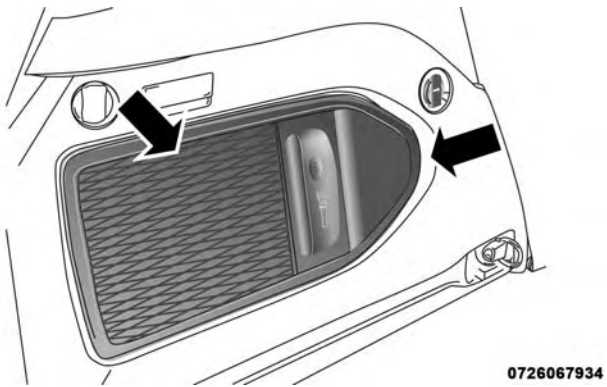

Trim Panel Door

3. Using a suitable tool remove fastener.
4. Disconnect the electrical connector by pushing the release.

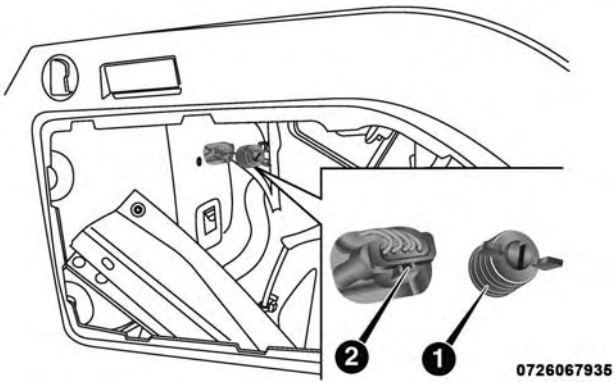

Rear Lamp Fastener and Electrical Connector

1 — Fastener
2 — Electrical Connector

5. Remove the rear tail lamp, sliding it toward the outside as shown.

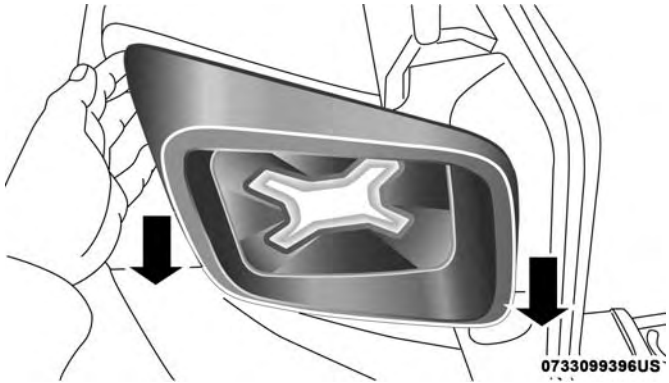

Tail Lamp Removal

6. Unscrew the screws and remove the rear tail lamp holder.

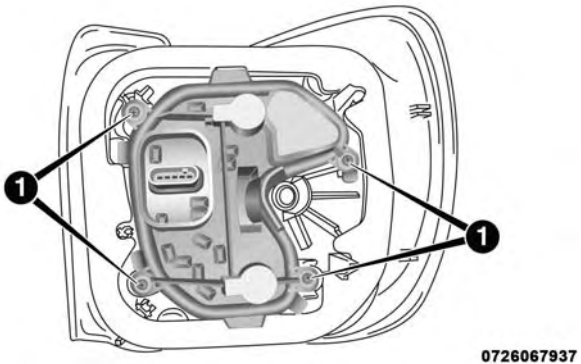

Rear Lamp Assembly

1 — Mounting Screws

7. Replace the bulb as necessary.

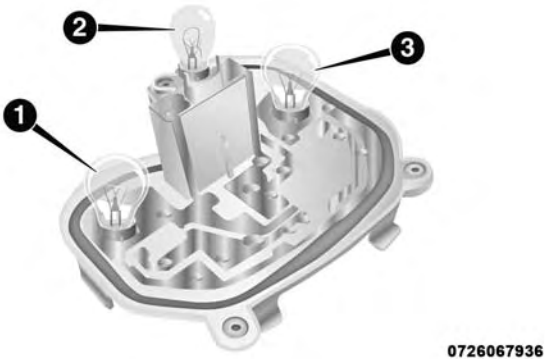

Rear Tail Lamp Holder

1 — Tail Light
2 — Reverse Bulb
3 — Position Light/Stop Light/Turn Signal

8. Insert the new bulb, making sure it is properly locked.
9. Reassemble the lamp assembly on the rear tail lamp housing, tightening the screws.
10. Reposition the rear tail lamp on the car.
11. Secure the fastener of the rear tail lamp and reconnect the electrical connector.
12. Reinstall the door making sure it locked into place.
13. Finally close the tailgate.

LED Rear Tail Lamps – If Equipped

For replacement see an authorized dealer.

Reverse Lights – If Equipped With LED Tail Lamps

1. Use a suitable tool to remove the screws and remove the access door.

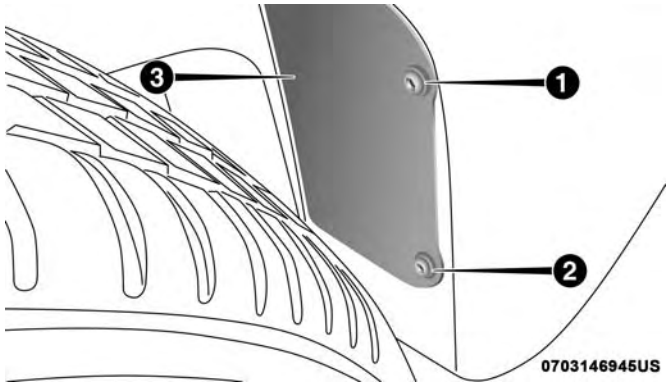

Reverse Light Access

1 — Screw
2 — Screw
3 — Access Door

2. By pushing the electrical connector tab remove the electrical connector.

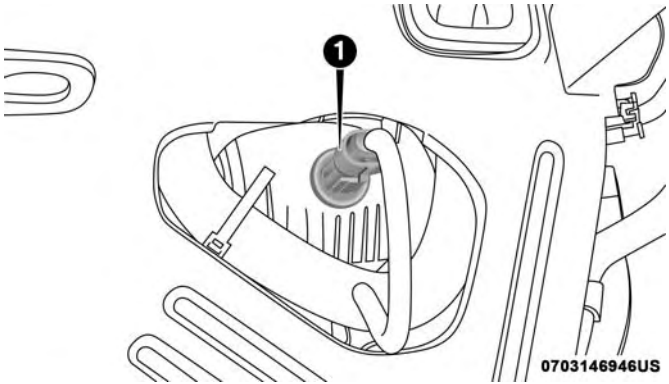

Reverse Light Assembly

1 — Bulb

3. Rotate the bulb counterclockwise, and then replace the bulb.
4. Insert the new bulb in the socket, making sure the bulb is locked into place.
5. Reconnect the electrical connector.
6. Reinstall the access door.

Center High Mounted Stop Lamp (CHMSL)

The CHMSL is LED. For replacement see an authorized dealer.

License Plate Lights

To replace the bulbs proceed as follows:

1. Using a suitable tool remove the license plate lens.

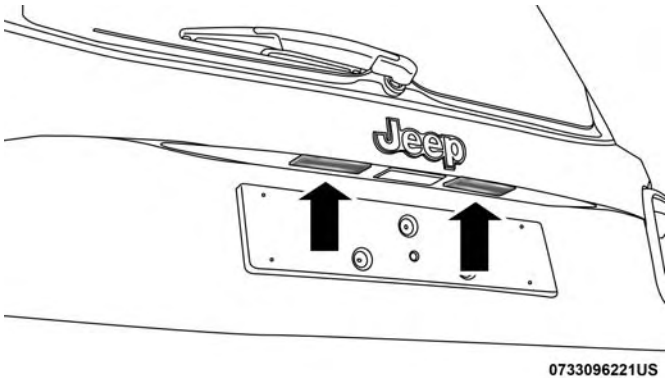

License Plate Light Location

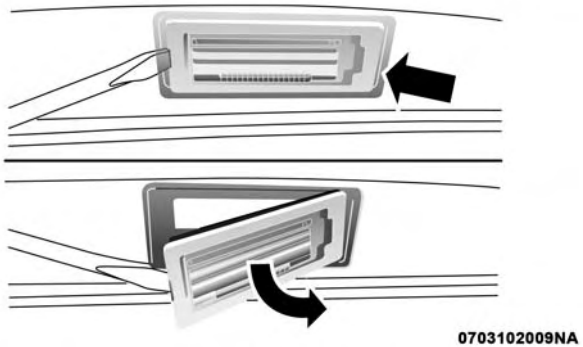

License Plate Light

2. Remove the bulbs from the individual side contacts.
3. Insert the new bulbs, and ensure that they are properly locked between the contacts.
4. Reinstall the license plate lens.

NOTE: If removing the license plate lens using a screwdriver, be sure to cover the tip of the screwdriver with a cloth so no damage is done to the lenses or the vehicle paint.

Replacing Interior Bulbs

Front Courtesy Light

To replace the bulbs proceed as follows:

1. Using a suitable tool remove the front courtesy light as shown.

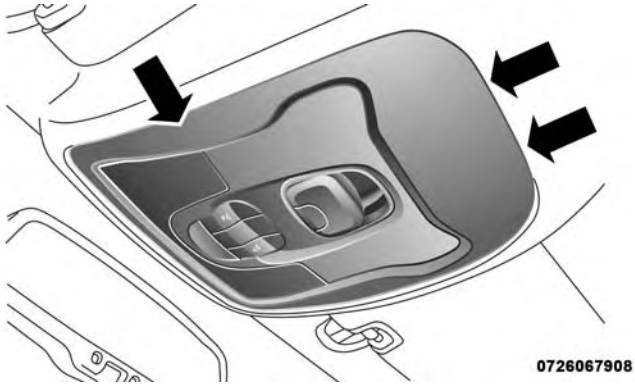

Front Courtesy Light Housing

2. Release the retainer clips and bulb housing as shown.

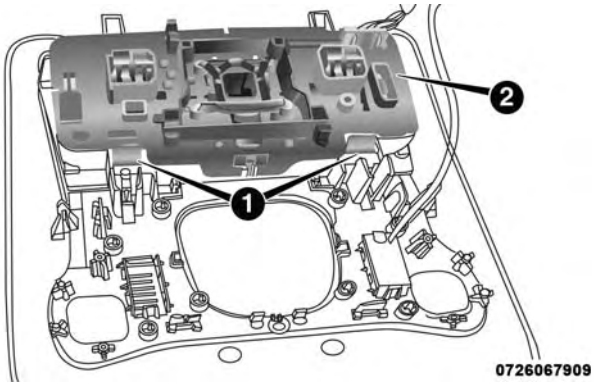

Front Courtesy Bulb Housing

1 — Retaining Clips
2 — Bulb Housing

3. Replace the bulbs by pulling straight out of bulb housing.

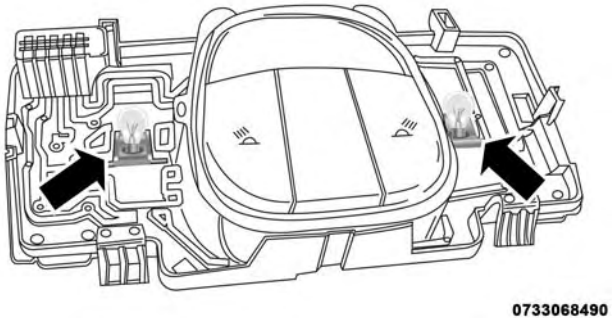

Front Courtesy Bulb Housing

4. Insert the new bulbs, making sure that they are properly locked.
5. Reassemble the bulb housing and courtesy light housing making sure that they are properly locked.
6. Install the front courtesy light making sure that it is properly locked.

Dome Light Vanity Mirror

To replace the bulbs proceed as follows:

1. Lift the cover of the mirror and pull out the visor mirror light cover.

2. Replace the bulb, releasing it from the side contacts, and then insert the new bulb, making sure that it is properly locked between the contacts.

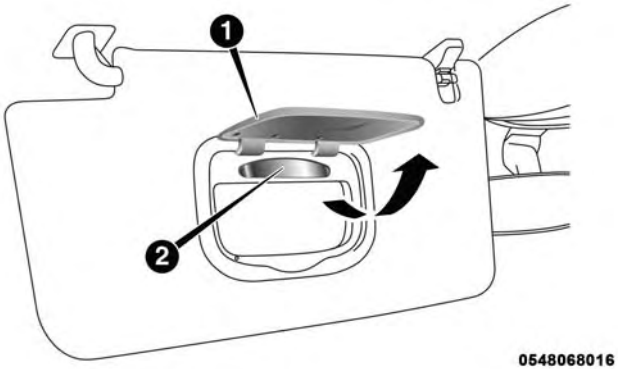

Visor

1 — Visor Mirror Cover
2 — Visor Mirror Light

3. Reinstall the visor mirror light cover making sure that it is properly locked.
4. Finally lower the visor mirror cover to the mirror.

Dome Light Glove Compartment

To replace the bulb proceed as follows:

1. Open the glove compartment.
2. Place your fingers inside the light assembly, pull the bulb to replace it.

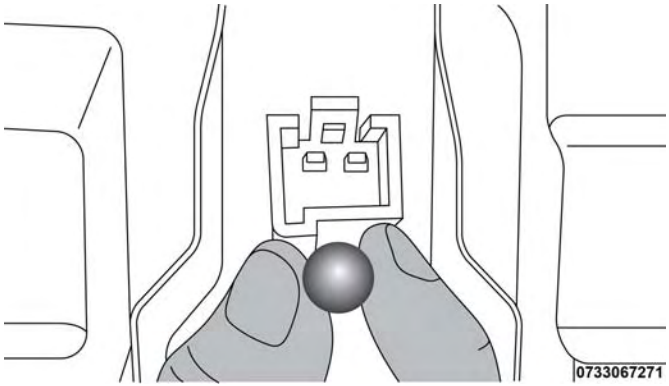

Bulb Removal/Installation

3. Insert the new bulb, making sure it is properly locked.

Rear Dome Light — Without Retractable Roof

To replace the bulbs proceed as follows:

1. Using a suitable tool release the lamp assembly at both the ends.
2. Open the flap and replace the bulb.

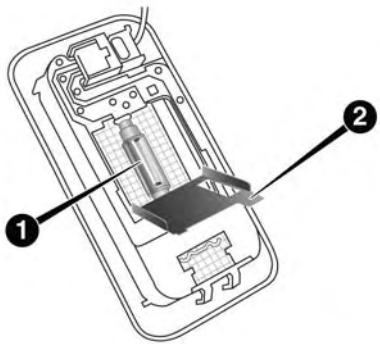

0726067933

Rear Dome Light Housing

1 — Bulb
2 — Flap

3. Insert the new bulb, locking it between the contacts.
4. Reinstall the dome light.

Dome Light — MY SKY

To replace the bulbs proceed as follows:

1. Lower the handle in the direction shown remove the dome light.

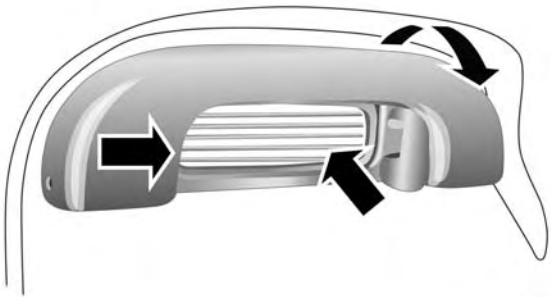

0726067927

Retractable Roof Light

2. Replace the bulb by removing it from the side contacts.

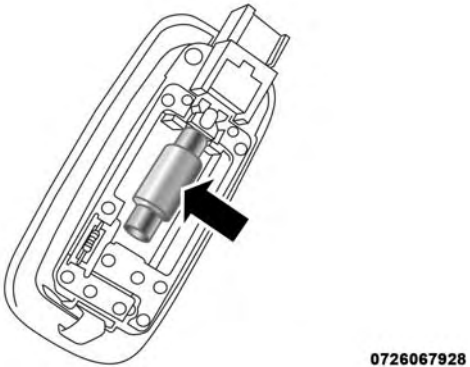

Bulb

3. Insert the new bulb, locking it between the contacts.
4. Reinstall the dome light.

Interior Cargo Lights

To replace the bulbs proceed as follows:

1. Open the luggage compartment and remove the dome light assembly.
2. Open the light cover and replace the bulb.

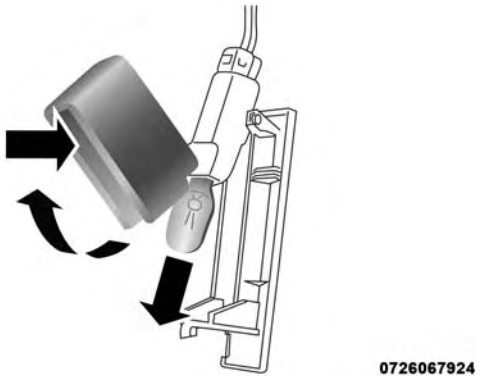

Light Cover

3. Close the light cover over the bulb.
4. Reinstall the dome light in its correct position.

WARNING!

- Before proceeding with the replacement of the lamp wait for the exhaust pipes are cool: DANGER OF BURNS!
- Modifications or repair of the electrical system performed incorrectly and without taking into account the technical characteristics can cause malfunctions with the risk of fire.
- Halogen lamps contain gas under pressure, in the event of breakage be careful of the projection of fragments of glass.
- Halogen lamps must be handled by touching only the metallic part. If the transparent bulb is in contact with the fingers, reduces the intensity of the emitted light and you can also affect the life of the lamp. In case of accidental contact, rub the bulb with a cloth dampened with alcohol and allow to dry.

FUSES

WARNING!

- When replacing a blown fuse, always use an appropriate replacement fuse with the same amp rating as the original fuse. Never replace a fuse with another fuse of higher amp rating. Never replace a blown fuse with metal wires or any other material. Failure to use proper fuses may result in serious personal injury, fire and/or property damage.
- Before replacing a fuse, make sure that the ignition is off and that all the other services are switched off and/or disengaged.
- If the replaced fuse blows again, contact an authorized dealer.
- If a general protection fuse for safety systems (air bag system, braking system), power unit systems (engine system, gearbox system) or steering system blows, contact an authorized dealer.

General Information

The fuses protect electrical systems against excessive current.

When a device does not work, you must check the electrical circuit inside the fuse for a break/melt.

Also please be aware that when using power outlets for extended periods of time with the engine off may result in vehicle battery discharge.

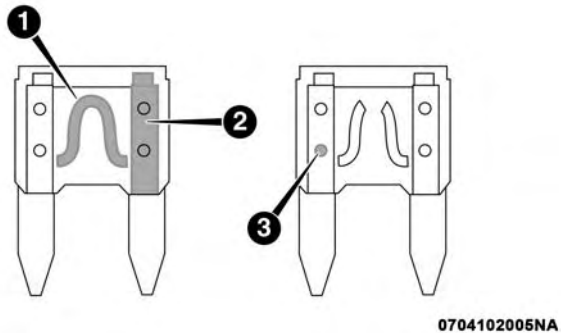

Blade Fuses

1 — Electrical Circuit
2 — Blade Fuse With Good Electrical Circuit
3 — Blade Fuse With Bad Electrical Circuit

Fuse Removal

To replace a fuse use the extractor attached to the fuse cover (located on the inside of the engine compartment fuse cover.)

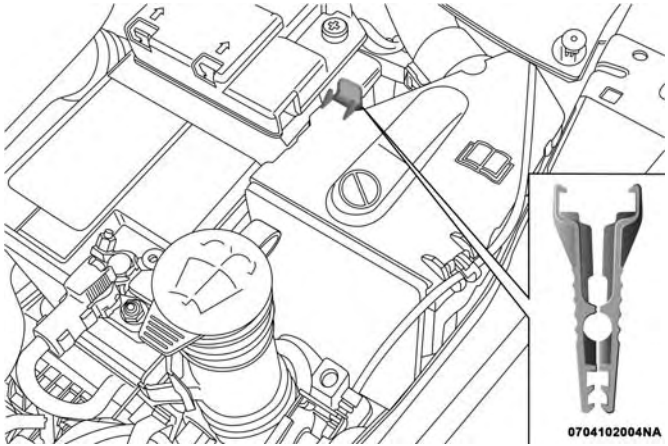

Fuse Extractor Location

Access To The Fuses

The fuses are grouped into four controllers located in the engine compartment, under the instrument panel and on the inside of the left side cargo trim panel.

Engine Compartment Fuses/Distribution Unit

The engine compartment fuse panel is located on the left side of the engine compartment.

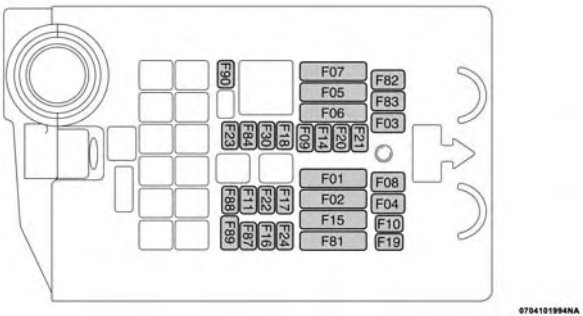

Engine Compartment Fuse Cavities

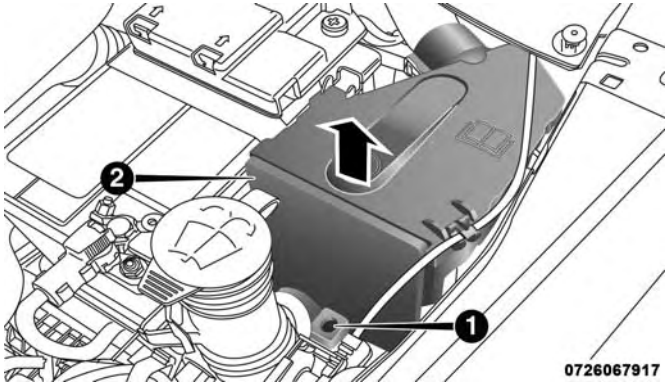

Fuse Panel & Cover Location

1 — Mounting Screw
2 — Fuse Cover

Removing Fuse Cover and Locking Screw

Proceed as follows:

- Slowly turn the screw counterclockwise.
- Slowly release the screw.
- Remove the fuse cover by sliding it upward.

Mounting Fuse Cover and Locking Screw

Proceed as follows:

- Properly secure the fuse cover to the box, slide completely from top to bottom.
- Fully depress the screw, using the special screwdriver supplied.
- Slowly turn the screw clockwise.
- Release the screw.

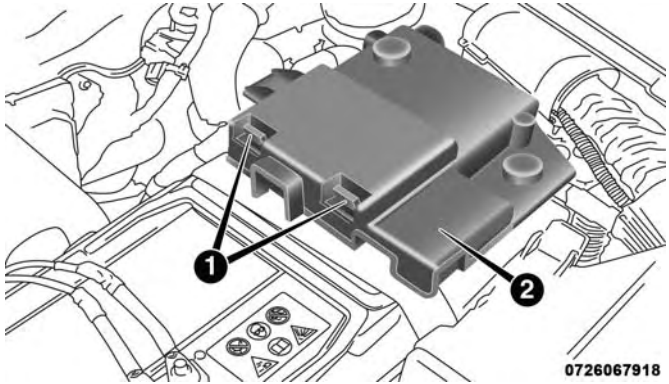

Battery Fuse Cover Location

1 — Fuse Cover Tabs
2 — Fuse Cover

Cavity	Maxi Fuse	Cartridge Fuse	Micro Fuse	Description
F01	70 Amp Tan	–	–	Module Body Computer
F02	70 Amp Tan	–	–	Module Body Computer, Rear Distribution Unit

Cavity	Maxi Fuse	Cartridge Fuse	Micro Fuse	Description
F03	–	20 Amp Blue	–	Controller Power Supply Body Computer
F04	–	30 Amp Pink	–	Brake Control Electronics Module
F05	70 Amp Tan	–	–	Electric Power-Assisted Steering
F06	20 Amp Yellow – 2.4L Engine 70 Amp Tan – 1.3L Turbo Engine	–	–	Engine Cooling Fan
F07	50 Amp Red – 2.4L Engine	–	–	Engine Cooling Fan
F08	–	30 Amp Pink	–	Automatic Transmission, GSM
F09	–	–	5 Amp Tan	Control Module Engine
F10	–	–	15 Amp Blue	Horn
F11	–	–	5 Amp Tan – 1.3L Turbo Engine 25 Amp Clear – 2.4L Engine	Supply Secondary Loads

Cavity	Maxi Fuse	Cartridge Fuse	Micro Fuse	Description
F14	–	–	15 Amp Blue – 1.3L Turbo Engine	WCAC Pump/Active Grille Shutters
F15	40 Amp Orange	–	–	Brake Control Module Pump
F16	–	–	5 Amp Tan	Engine Control Module Power, Automatic Transmission
F17	–	–	30 Amp Green – 1.3L Turbo Engine 15 Amp Blue – 2.4L Engine	Supply Primary Loads
F19	–	–	7.5 Amp Brown	Air Conditioner Compressor
F20	–	–	5 Amp Tan	Electronic Power Four-Wheel Drive
F21	–	–	15 Amp Blue	Fuel Pump
F22	–	–	10 Amp Red – 1.3L Turbo Engine 20 Amp Yellow – 2.4L Engine	Power Control Module Engine
F23	–	–	30 Amp Green	Heated Windshield – If Equipped

Cavity	Maxi Fuse	Cartridge Fuse	Micro Fuse	Description
F24	–	–	15 Amp Blue	Electronic Unit Supply Automatic Transmission
F82	–	–	20 Amp Yellow – 1.3L Turbo Engine	Power Control Module Engine
F83	–	40 Amp Green	–	Air Conditioning Fan
F84	–	–	30 Amp Green	Power Supply All Wheel Drive
F87	–	–	5 Amp Tan	Gear Selector Automatic Transmission
F88	–	–	7.5 Amp Brown	Heated Outside Mirrors
F89	–	–	30 Amp Green	Heated Rear Window
F90	–	–	5 Amp Tan	IBS Sensor (Battery State Of Charge)

Body Computer Fuse Center

The controller is located at the left side of the steering column at the bottom of the instrument panel.

For the fuse replacement see an authorized dealer.

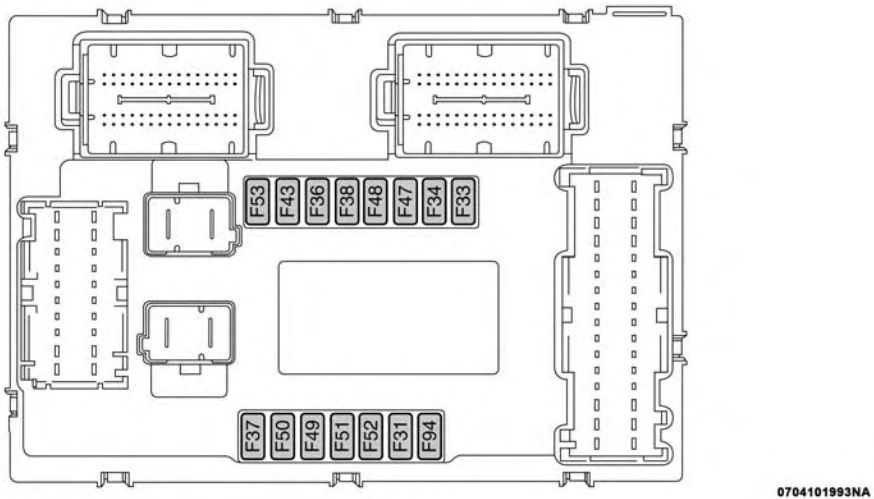

Body Controller Fuse Cavities

Cavity	Mini Fuse	Description
F31	7.5 Amp Brown	Flashes/Electrical Movement Front Seats/Fan Air Conditioning
F33	20 Amp Yellow	Power Window Front (Passenger Side)
F34	20 Amp Yellow	Power Window Front (Driver Side)
F36	15 Amp Blue	Supply Uconnect System, Air Conditioning, USB Port, Rear Ceiling Lights (With Sunroof), E-Call, SGW
F37	10 Amp Red	System Power Forward Collision Warning Plus, All Wheel Drive (AWD), IPC, Brake Pedal Switch (NC)
F38	20 Amp Yellow	Central Locking
F42	7.5 Amp Brown	Power Under Lock and Key, Brake Control Electronics Module, Electric Power-Assisted Steering
F43	20 Amp Yellow	Bi-directional Pump Washer
F47	20 Amp Yellow	Power Rear Window (Driver Side)
F48	20 Amp Yellow	Power Rear Window (Passenger Side)

Cavity	Mini Fuse	Description
F49	7.5 Amp Brown	Supply ParkSense, SGW, Mirror, Heated Front Seats, Stabilizer Battery, ESC System, S&S Inhibition Command, Blind Spot, Rain/Light Sensor, Humidity Sensor
F50	7.5 Amp Brown	Supply Air Bag
F51	7.5 Amp Brown	Air Conditioning, Lane Departure Warning, Terrain Selector, Backup Lights Switch (MT), Trailer Tow Module, Compass Module, Rear View Camera
F53	7.5 Amp Brown	Supply IPC/Starter Device/System Keyless Enter-N-Go
F94	15 Amp Blue	Power Socket

Rear Cargo Fuse/Relay Distribution Unit

To access the fuses, remove the access door from the left rear panel of the rear cargo area.

The fuses may be contained in two units. fuse holder No. 1 and fuse holder No. 2 (if equipped with trailer towing) are located closest to the rear of the vehicle.

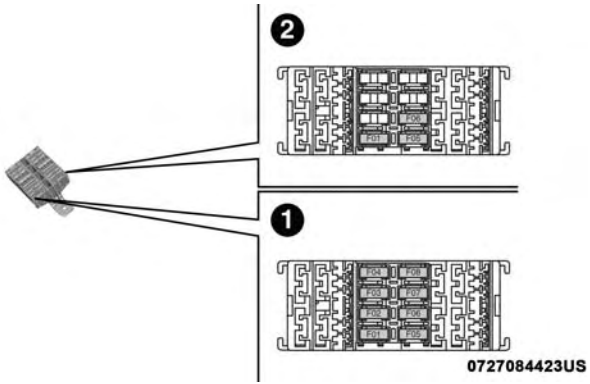

Rear Cargo Fuse Cavities

1 — Fuse Holder No. 1
2 — Fuse Holder No. 2

Fuse Holder No. 1

Cavity	Mini Fuse	Description
F1	30 Amp Blue	Power Inverter
F2	20 Amp Yellow	HIFI Audio System
F3	20 Amp Yellow	MY SKY
F5	30 Amp Green	Power Seat (Driver Side)
F6	7.5 Amp Brown	Lumbar Adjustment Front Seat (Driver Side)
F8	20 Amp Yellow	Heating Front Seats

On the controller there is also a 20 amp fuse for the sun visor of the retractable roof.

Fuse Holder No. 2

Cavity	Mini Fuse	Description
F1	10 Amp Red	Controller Exterior Lighting On Trailer
F5	15 Amp Blue	Controller Exterior Lighting Lights (Drivers Side)
F6	15 Amp Blue	Controller Exterior Lighting Lights (Passenger Side)

JACKING AND TIRE CHANGING

WARNING!

- **Do not attempt to change a tire on the side of the vehicle close to moving traffic. Pull far enough off the road to avoid the danger of being hit when operating the jack or changing the wheel.**
- **Being under a jacked-up vehicle is dangerous. The vehicle could slip off the jack and fall on you. You could be crushed. Never put any part of your body under a vehicle that is on a jack. If you need to get under a raised vehicle, take it to a service center where it can be raised on a lift.**
- **Never start or run the engine while the vehicle is on a jack.**
- **The jack is designed to be used as a tool for changing tires only. The jack should not be used to lift the vehicle for service purposes. The vehicle should be jacked on a firm level surface only. Avoid ice or slippery areas.**

Jack Location/Spare Tire Stowage

The jack and tools are located in the rear storage compartment if equipped, inside a special container.

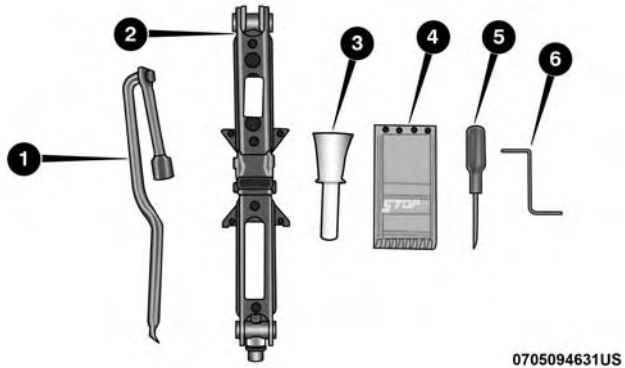

Jack And Tools

1 — Wheel Bolt Wrench
2 — Jack
3 — Emergency Funnel
4 — Wheel Chocks
5 — Screwdriver
6 — Emergency Allen Key

1. Open the liftgate.
2. Lift the access cover using the load floor handle.

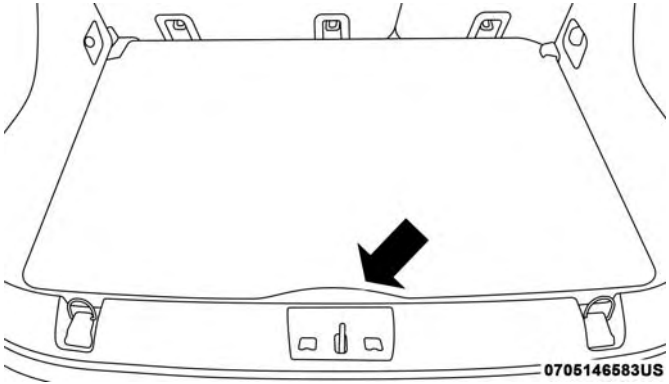

Load Floor Handle

3. Remove the fastener securing the spare tire.
4. Remove the chocks.
5. Remove the jack and wheel bolt wrench.
6. Remove the spare tire.

WARNING!

A loose tire or jack thrown forward in a collision or hard stop could endanger the occupants of the vehicle. Always stow the jack parts and the spare tire in the places provided. Have the deflated (flat) tire repaired or replaced immediately.

Preparations For Jacking

1. Park the vehicle on a firm level surface as far from the edge of the roadway as possible. Avoid icy or slippery areas.

WARNING!

Do not attempt to change a tire on the side of the vehicle close to moving traffic. Pull far enough off the road to avoid being hit when operating the jack or changing the wheel.

2. Turn on the Hazard Warning flasher.
3. Apply the Electric Park Brake.
4. Place the gear selector into PARK (automatic transmission) or REVERSE (manual transmission).

5. Turn the ignition to the OFF position.

6. Chock both the front and rear of the wheel diagonally opposite of the jacking position. For example, if changing the right front tire, chock the left rear wheel.

NOTE: Passengers should not remain in the vehicle when the vehicle is being jacked.

Jacking Instructions

WARNING!

Carefully follow these tire changing warnings to help prevent personal injury or damage to your vehicle:

- **Always park on a firm, level surface as far from the edge of the roadway as possible before raising the vehicle.**
- **Turn on the Hazard Warning flasher.**
- **Chock the wheel diagonally opposite the wheel to be raised.**
- **Apply the parking brake and place an automatic transmission in PARK.**

(Continued)

WARNING! ***(Continued)***

- **Never start or run the engine with the vehicle on a jack.**
- **Do not let anyone sit in the vehicle when it is on a jack.**
- **Do not get under the vehicle when it is on a jack. If you need to get under a raised vehicle, take it to a service center where it can be raised on a lift.**
- **Only use the jack in the positions indicated and for lifting this vehicle during a tire change.**
- **If working on or near a roadway, be extremely careful of motor traffic.**
- **To assure that spare tires, flat or inflated, are securely stowed, spares must be stowed with the valve stem facing the ground.**

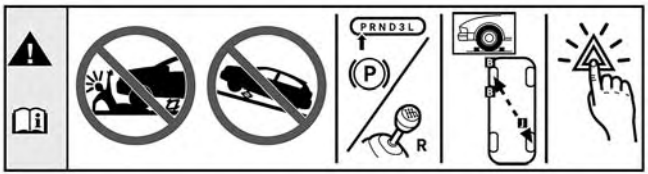

060600714

Jack Warning Label

CAUTION!
Do not attempt to raise the vehicle by jacking on locations other than those indicated in the Jacking Instructions for this vehicle.

1. Remove the spare tire, jack, and wheel bolt wrench.
2. If equipped with wheels where the center cap covers the wheel bolts, use the wheel bolt wrench to pry the center cap off carefully before raising the vehicle.
3. Before raising the vehicle, use the wheel bolt wrench to loosen, but not remove, the wheel bolts on the wheel with the flat tire. Turn the wheel bolts counterclockwise one turn while the wheel is still on the ground.
4. Place the jack underneath the jacking location that is closest to the flat tire. Jacking location is indicated by a stamped arrow on the body. Turn the jack screw clockwise to firmly engage the jack saddle with the lift area of the sill flange, centering the jack saddle inside the cutout in the sill cladding.

Jacking Locations

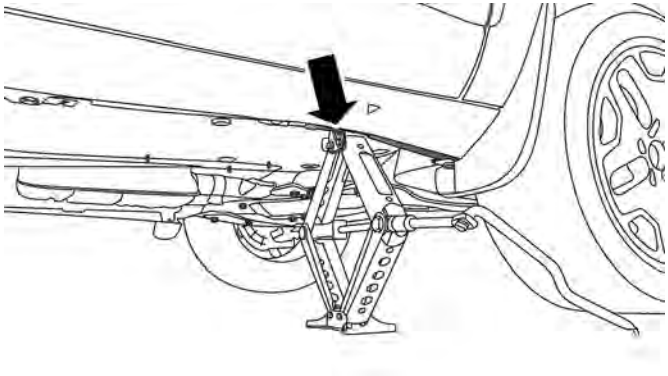

Front Jacking Location

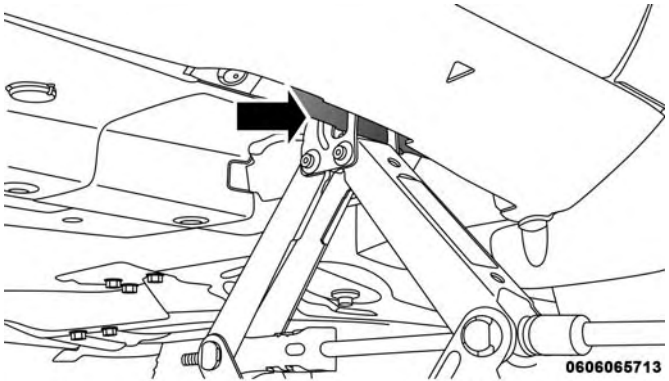

Front Jacking Engagement Point

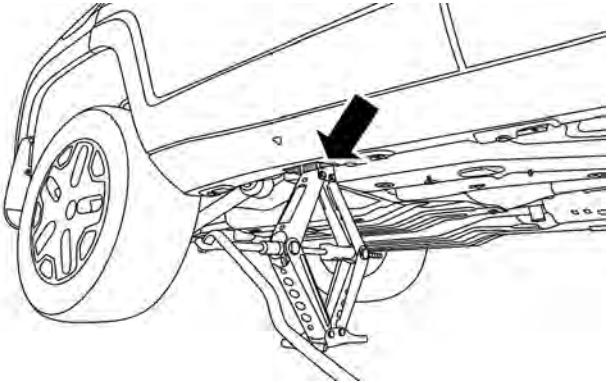

Rear Jacking Location

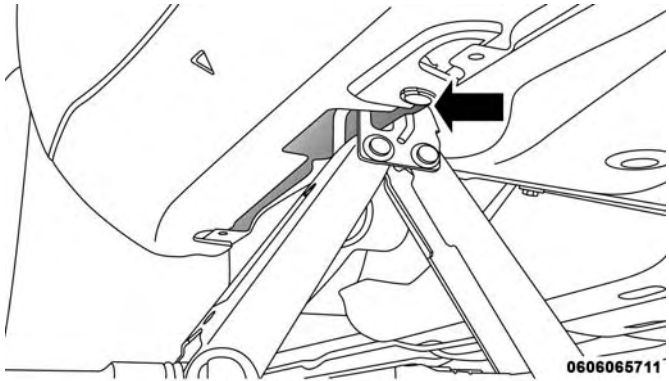

Rear Jacking Engagement Point

5. Raise the vehicle just enough to remove the flat tire.

WARNING!

Raising the vehicle higher than necessary can make the vehicle less stable. It could slip off the jack and hurt someone near it. Raise the vehicle only enough to remove the tire.

6. Remove the wheel bolts and tire.
7. Mount the spare tire.

CAUTION!

Be sure to mount the spare tire with the valve stem facing outward. The vehicle could be damaged if the spare tire is mounted incorrectly.

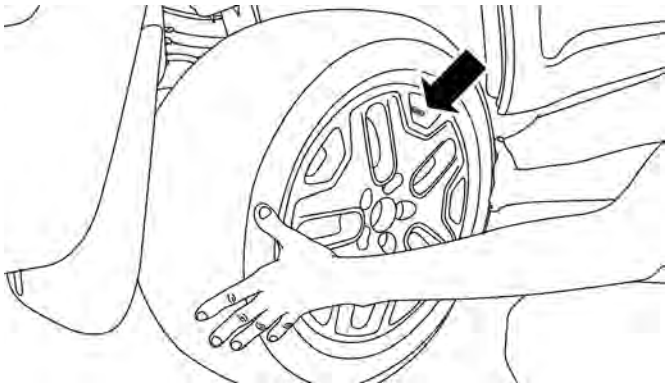

Mounting Spare Tire

NOTE:

- Your vehicle may be equipped with a compact spare tire or a limited — use spare tire. For further information refer to "Tires — General Information" in "Servicing And Maintenance".
- For vehicles so equipped, do not attempt to install a center cap or wheel cover on the compact spare.

8. Install the wheel bolts with the threaded end of the wheel bolt toward the wheel. Lightly tighten the wheel bolts.

WARNING!

To avoid the risk of forcing the vehicle off the jack, do not fully tighten the wheel bolts until the vehicle has been lowered. Failure to follow this warning may result in serious injury.

9. Lower the vehicle to the ground by turning the jack handle counterclockwise.

10. Finish tightening the wheel bolts. Push down on the wrench while at the end of the handle for increased leverage. Tighten the wheel bolts in a star pattern until each wheel bolt has been tightened twice. Refer to "Torque Specifications" in "Technical Specifications" for the proper lug bolt torque. If in doubt about the correct tightness, have them checked with a torque wrench by an authorized dealer or at a service station.

11. Securely stow the jack, tools, chocks, and flat tire.

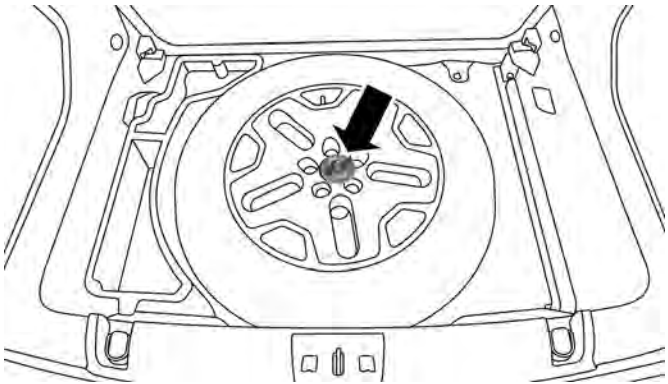

Properly Stowed Tire

WARNING!

A loose tire or jack thrown forward in a collision or hard stop could endanger the occupants of the vehicle. Always stow the jack parts and the spare tire in the places provided. Have the deflated (flat) tire repaired or replaced immediately.

Road Tire Installation

1. Mount the road tire on the axle.

2. Install the remaining wheel bolts with the threaded end of the wheel bolt toward the wheel. Lightly tighten the wheel bolts.

WARNING!

To avoid the risk of forcing the vehicle off the jack, do not fully tighten the wheel bolts until the vehicle has been lowered. Failure to follow this warning may result in serious injury.

3. Lower the vehicle to the ground by turning the jack handle counterclockwise.

4. Finish tightening the wheel bolts. Push down on the wrench while at the end of the handle for increased leverage. Tighten the wheel bolts in a star pattern until each wheel bolt has been tightened twice. Refer to "Torque Specifications" in the "Technical Specifications" section for the proper lug bolt torque. If in doubt about the correct tightness, have them checked with a torque wrench by an authorized dealer or service station.
5. Lower the jack until it is free. Remove the wheel chocks. Stow the jack and tools back in the proper storage location. Release the Electric Park Brake before driving the vehicle.
6. After 25 miles (40 km) check the wheel bolt torque with a torque wrench to ensure that all wheel bolts are properly seated against the wheel.

TIRE SERVICE KIT — IF EQUIPPED

Tire Service Kit Storage

The Tire Service Kit is located in the rear storage compartment inside a storage container. Located inside the container are a screwdriver and the emergency fuel funnel. To access the Tire Service Kit open the liftgate and remove the load floor.

Tire Service Kit Components And Operation

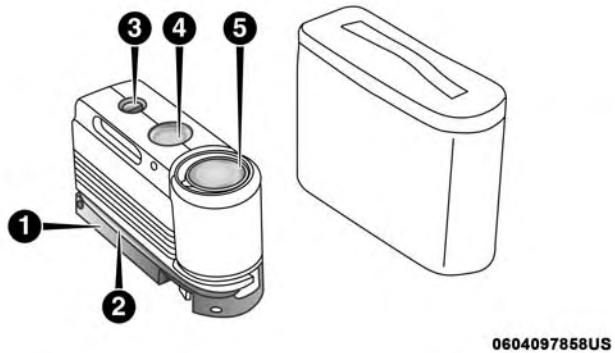

Tire Service Kit Components

1 — Power Plug (Located On Bottom Side Of Tire Service Kit)
2 — Sealant Hose (Clear)
3 — Power Button
4 — Pressure Gauge
5 — Warning Label

If a tire is punctured, you can make a first emergency repair using the Tire Service Kit located in the rear storage compartment inside the storage container.

1. Remove the Tire Service Kit from the vehicle, take it out from the bag and place it near the punctured tire. Screw the clear flexible filling tube to the tire valve.
2. Insert the power plug into the vehicle power outlet socket. Start the vehicle engine.
3. Push the Tire Service Kit power button to the "I" position. The electric compressor will be turned on, sealant and air will inflate the tire.

Minimum 26 psi (1.8 bar) of pressure should be reached within 20 minutes. If the pressure has not been reached turn off and remove the Tire Service Kit, drive the vehicle 30 feet (10 meters) back and forth, to better distribute the sealant inside the tire.

4. Attach the clear flexible filling tube of the compressor directly to the tire valve and repeat the inflation process.

When the correct pressure has been reached, start driving the vehicle to uniformly distribute the sealant inside the tire. After 10 minutes, stop and check the tire pressure. If the pressure is below 19 psi (1.3 bar), do not drive the vehicle, as the tire is too damaged, and contact the nearest authorized dealer.

WARNING!

Tire Service Kit is not a permanent flat tire repair. Have the tire inspected and repaired or replaced after using Tire Service Kit. Do not exceed 50 mph (80 km/h) until the tire is repaired or replaced. Failure to follow this warning can result in injuries that are serious or fatal to you, your passengers, and others around you. Have the tire checked as soon as possible at an authorized dealer.

If the pressure is at 19 psi (1.3 bar) or above repeat the inflation process to reach the correct tire pressure and continue driving.

5. Peel off the warning label from the bottle and place it on the dashboard as a reminder to the driver that the tire has been treated with Tire Service Kit.

WARNING!

The metal end fitting from Power Plug may get hot after use, so it should be handled carefully.

Tire Service Kit Usage Precautions

WARNING!

- Do not attempt to seal a tire on the side of the vehicle closest to traffic. Pull far enough off the road to avoid the danger of being hit when using the Tire Service Kit.
- Do not use Tire Service Kit or drive the vehicle under the following circumstances:
  - If the puncture in the tire tread is approximately 1/4 inch (6 mm) or larger.
  - If the tire has any sidewall damage.
  - If the tire has any damage from driving with extremely low tire pressure.
  - If the tire has any damage from driving on a flat tire.
  - If the wheel has any damage.
  - If you are unsure of the condition of the tire or the wheel.
- Keep Tire Service Kit away from open flames or heat source.

(Continued)

WARNING! *(Continued)*

- A loose Tire Service Kit thrown forward in a collision or hard stop could endanger the occupants of the vehicle. Always stow the Tire Service Kit in the place provided. Failure to follow these warnings can result in injuries that are serious or fatal to you, your passengers, and others around you.
- Take care not to allow the contents of Tire Service Kit to come in contact with hair, eyes, or clothing. Tire Service Kit sealant is harmful if inhaled, swallowed, or absorbed through the skin. It causes skin, eye, and respiratory irritation. Flush immediately with plenty of water if there is any contact with eyes or skin. Change clothing as soon as possible, if there is any contact with clothing.
- Tire Service Kit Sealant solution contains latex. In case of an allergic reaction or rash, consult a physician immediately. Keep Tire Service Kit out of reach of children. If swallowed, rinse mouth immediately with plenty of water and drink plenty of water. Do not induce vomiting! Consult a physician immediately.

Replacing The Sealant

NOTE: Replace the sealant canister prior to the expiration date at an authorized dealer.

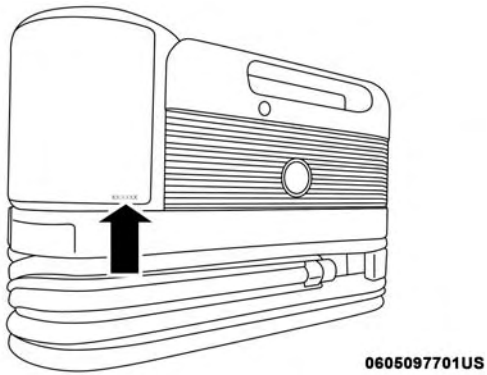

Tire Service Kit Expiration Date Location

WARNING!

Store the sealant canister in its special compartment, away from sources of heat. Failure to follow this WARNING may result in sealant canister rupture and serious injury or death.

JUMP STARTING

If your vehicle has a discharged battery it can be jump started using a set of jumper cables and a battery in another vehicle or by using a portable battery booster pack. Jump starting can be dangerous if done improperly so please follow the procedures in this section carefully.

NOTE: When using a portable battery booster pack follow the manufacturer's operating instructions and precautions.

WARNING!

Do not attempt jump starting if the battery is frozen. It could rupture or explode and cause personal injury.

CAUTION!

Do not use a portable battery booster pack or any other booster source with a system voltage greater than 12 Volts or damage to the battery, starter motor, alternator or electrical system may occur.

Preparations For Jump Start

The battery in your vehicle is located in the front of the engine compartment, behind the left headlight assembly.

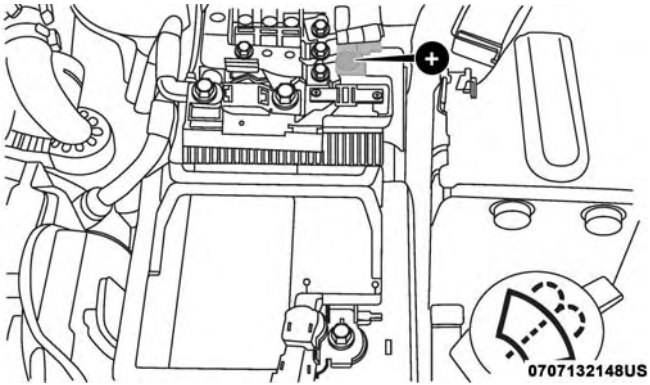

Positive Battery Post

NOTE: The positive battery post is covered with a protective cap. Lift up on the cap to gain access to the positive battery post.

WARNING!

- **Take care to avoid the radiator cooling fan whenever the hood is raised. It can start anytime the ignition switch is ON. You can be injured by moving fan blades.**
- **Remove any metal jewelry such as rings, watch bands and bracelets that could make an inadvertent electrical contact. You could be seriously injured.**
- **Batteries contain sulfuric acid that can burn your skin or eyes and generate hydrogen gas which is flammable and explosive. Keep open flames or sparks away from the battery.**

Proceed as follows:

1. Apply the Electric Park Brake, shift the automatic transmission into PARK (manual transmission in NEUTRAL) and place the ignition OFF.
2. Turn off the heater, radio, and all unnecessary electrical accessories.
3. If using another vehicle to jump start the battery, park the vehicle within the jumper cables reach, set the parking brake and make sure the ignition is OFF.

WARNING!

Do not allow vehicles to touch each other as this could establish a ground connection and personal injury could result.

Jump Starting Procedure

WARNING!

Failure to follow this jump starting procedure could result in personal injury or property damage due to battery explosion.

CAUTION!

Failure to follow these procedures could result in damage to the charging system of the booster vehicle or the discharged vehicle.

Connecting The Jumper Cables

1. Connect the positive **(+)** end of the jumper cable to the positive **(+)** post of the discharged vehicle.
2. Connect the opposite end of the positive **(+)** jumper cable to the positive **(+)** post of the booster battery.
3. Connect the negative **(-)** end of the jumper cable to the negative **(-)** post of the booster battery.
4. Connect the opposite end of the negative **(-)** jumper cable to a good engine ground (exposed metal part of the discharged vehicle's engine) away from the battery and the fuel injection system.

WARNING!

Do not connect the jumper cable to the negative (-) post of the discharged battery. The resulting electrical spark could cause the battery to explode and could result in personal injury. Only use the specific ground point, do not use any other exposed metal parts.

5. Start the engine in the vehicle that has the booster battery, let the engine idle a few minutes, and then start the engine in the vehicle with the discharged battery.
6. Once the engine is started, remove the jumper cables in the reverse sequence:

Disconnecting The Jumper Cables

1. Disconnect the negative **(-)** end of the jumper cable from the engine ground of the vehicle with the discharged battery.

2. Disconnect the opposite end of the negative **(-)** jumper cable from the negative **(-)** post of the booster battery.
3. Disconnect the positive **(+)** end of the jumper cable from the positive **(+)** post of the booster battery.
4. Disconnect the opposite end of the positive **(+)** jumper cable from the positive **(+)** post of the vehicle with the discharged battery.

If frequent jump starting is required to start your vehicle you should have the battery and charging system inspected at an authorized dealer.

CAUTION!

Accessories plugged into the vehicle power outlets draw power from the vehicle's battery, even when not in use (i.e., cellular devices, etc.). Eventually, if plugged in long enough without engine operation, the vehicle's battery will discharge sufficiently to degrade battery life and/or prevent the engine from starting.

REFUELING IN EMERGENCY

The fuel filling procedure in case of emergency is described in the "Emergency Refueling Procedure". Refer to "Adding Fuel" in "Starting And Operating" for further information.

IF YOUR ENGINE OVERHEATS

In any of the following situations, you can reduce the potential for overheating your engine by taking the appropriate action.

- On the highways — slow down.
- In city traffic — while stopped, put transmission in NEUTRAL, but do not increase engine idle speed.

CAUTION!

Driving with a hot cooling system could damage your vehicle. If the temperature gauge reads "H," pull over and stop the vehicle. Idle the vehicle with the air conditioner turned off until the pointer drops back into the normal range. If the pointer remains on the "H" and you hear continuous chimes, turn the engine off immediately and call for service.

NOTE: There are steps that you can take to slow down an impending overheat condition:

- If your air conditioner (A/C) is on, turn it off. The A/C system adds heat to the engine cooling system and turning the A/C off can help remove this heat.
- You can also turn the temperature control to maximum heat, the mode control to floor and the blower control to high. This allows the heater core to act as a supplement to the radiator and aids in removing heat from the engine cooling system.

WARNING!

You or others can be badly burned by hot engine coolant (antifreeze) or steam from your radiator. If you see or hear steam coming from under the hood, do not open the hood until the radiator has had time to cool. Never try to open a cooling system pressure cap when the radiator or coolant bottle is hot.

GEAR SELECTOR OVERRIDE

If a malfunction occurs and the gear selector cannot be moved out of the PARK position, you can use the following procedure to temporarily move the gear selector:

1. Turn the engine OFF.
2. Apply the Electric Park Brake.
3. Carefully separate the gear selector boot assembly from the bezel.

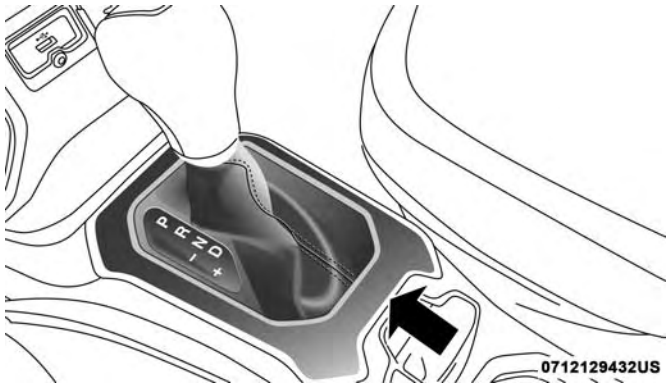

Gear Selector Bezel Location

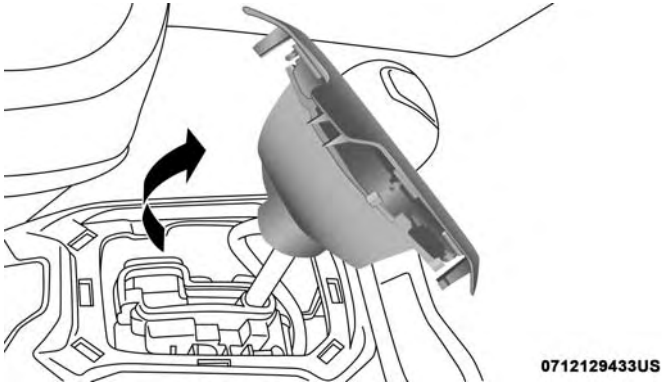

Removing Gear Selector Bezel

4. Press and maintain firm pressure on the brake pedal.
5. Insert a small screwdriver or similar tool down into the gear selector override access hole (at the right front corner of the gear selector assembly), and push and hold the override release lever down.

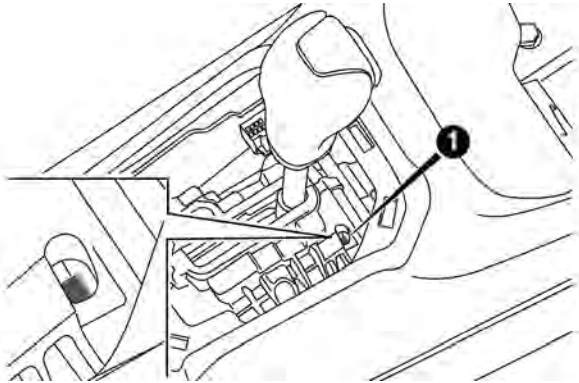

Gear Selector Override Location

1 — Gear Selector Override Access Hole

6. Move the gear selector to the NEUTRAL position.
7. The vehicle may then be started in NEUTRAL.
8. Reinstall the gear selector boot on the bezel.

FREEING A STUCK VEHICLE

If your vehicle becomes stuck in mud, sand or snow, it can often be moved using a rocking motion. Turn the steering wheel right and left to clear the area around the front wheels. For vehicles with automatic transmission, push and hold the lock button on the gear selector. Then shift back and forth between DRIVE and REVERSE (with automatic transmission) or SECOND GEAR and REVERSE (with manual transmission), while gently pressing the accelerator.

Use the least amount of accelerator pedal pressure that will maintain the rocking motion without spinning the wheels or racing the engine.

For Vehicles With Automatic Transmission:

Shifts between DRIVE and REVERSE can only be achieved at wheel speeds of 5 mph (8 km/h) or less. Whenever the transmission remains in NEUTRAL for more than two seconds, you must press the brake pedal to engage DRIVE or REVERSE.

NOTE: Push the "ESC Off" switch (if necessary), to place the Electronic Stability Control (ESC) system in "Partial Off" mode, before rocking the vehicle. Refer to "Electronic Brake Control" in "Safety" for further information. Once the vehicle has been freed, push the "ESC Off" switch again to restore "ESC On" mode.

WARNING!

Fast spinning tires can be dangerous. Forces generated by excessive wheel speeds may cause damage, or even failure, of the axle and tires. A tire could explode and injure someone. Do not spin your vehicle's wheels faster than 30 mph (48 km/h) or for longer than 30 seconds continuously without stopping when you are stuck and do not let anyone near a spinning wheel, no matter what the speed.

CAUTION!

- **Racing the engine or spinning the wheels may lead to transmission overheating and failure. Allow the engine to idle with the transmission in NEUTRAL for at least one minute after every five rocking-motion cycles. This will minimize overheating and reduce the risk of clutch or transmission failure during prolonged efforts to free a stuck vehicle.**
- **When "rocking" a stuck vehicle by shifting between DRIVE/SECOND gear and REVERSE, do not spin the wheels faster than 15 mph (24 km/h), or drive-train damage may result.**

(Continued)

CAUTION! *(Continued)*

- **Revving the engine or spinning the wheels too fast may lead to transmission overheating and failure. It can also damage the tires. Do not spin the wheels above 30 mph (48 km/h) while in gear (no transmission shifting occurring).**

TOWING A DISABLED VEHICLE

This section describes procedures for towing a disabled vehicle using a commercial towing service.

Towing Condition	Wheels OFF The Ground	FWD MODELS	FOUR WHEEL DRIVE
Flat Tow	NONE	**NOT ALLOWED**	**NOT ALLOWED**
Wheel Lift Or Dolly Tow	Rear	**NOT ALLOWED**	**NOT ALLOWED**
	Front	OK	**NOT ALLOWED**
Flatbed	**ALL**	**BEST METHOD**	**OK**

Proper towing or lifting equipment is required to prevent damage to your vehicle. Use only tow bars and other equipment designed for this purpose, following equipment manufacturer's instructions. Use of safety chains is mandatory. Attach a tow bar or other towing device to main structural members of the vehicle, not to bumpers or associated brackets. State and local laws regarding vehicles under tow must be observed.

NOTE:

- Vehicles with a discharged battery or total electrical failure when the Electric Park Brake (EPB) is engaged, will need a wheel dolly or jack to raise the rear wheels off the ground when moving the vehicle onto a flatbed.
- You must ensure that the Auto Park Brake feature is disabled before towing this vehicle, to avoid inadvertent Electric Park Brake engagement. The Auto Park Brake feature is enabled or disabled via the customer programmable features in the Uconnect Settings.

If you must use the accessories (wipers, defrosters, etc.) while being towed, the ignition must be in the RUN mode. If the key fob is unavailable, or the vehicle's battery is discharged, refer to "Gear Selector Override" in this section for instructions on shifting the transmission out of PARK so that the vehicle can be moved.

CAUTION!

- **Do not use sling type equipment when towing. Vehicle damage may occur.**
- **When securing the vehicle to a flat bed truck, do not attach to front or rear suspension components. Damage to your vehicle may result from improper towing.**

Front Wheel Drive (FWD)

The manufacturer recommends towing your vehicle with all four wheels OFF the ground on a flatbed.

If flatbed equipment is not available, this vehicle must towed with the front wheels OFF the ground (using a towing dolly, or wheel lift equipment with the front wheels raised).

NOTE: Ensure that the Electric Park Brake is released, and remains released, while being towed.

CAUTION!

Towing this vehicle in violation of the above requirements can cause severe transmission damage. Damage from improper towing is not covered under the New Vehicle Limited Warranty.

Four Wheel Drive (4WD)

The manufacturer requires towing with all four wheels OFF the ground. Acceptable methods are to tow the vehicle on a flatbed, or with one end of the vehicle raised and the opposite end on a towing dolly.

CAUTION!

- **DO NOT tow this vehicle with ANY of its wheels on the ground. Damage to the drivetrain will result.**
- **Front or rear wheel lifts must not be used (if the remaining wheels are on the ground). Internal damage to the transmission or power transfer unit will occur if a front or rear wheel lift is used when towing.**
- **Towing this vehicle in violation of the above requirements can cause severe transmission and/or power transfer unit damage. Damage from improper towing is not covered under the New Vehicle Limited Warranty.**

Emergency Tow Hooks — If Equipped

If your vehicle is equipped with tow hooks, there will be one in the rear and two mounted on the front of the vehicle. The rear hook will be located on the driver's side of the vehicle.

NOTE: For off-road recovery, it is recommended to use both of the front tow hooks to minimize the risk of damage to the vehicle.

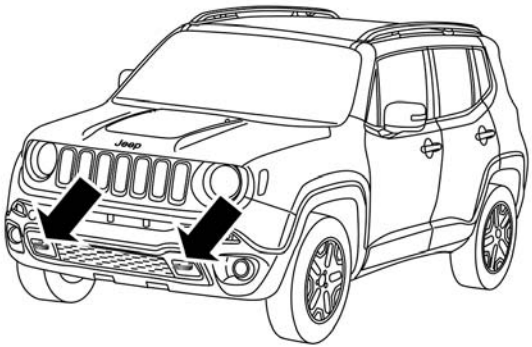

Front Tow Hook Locations

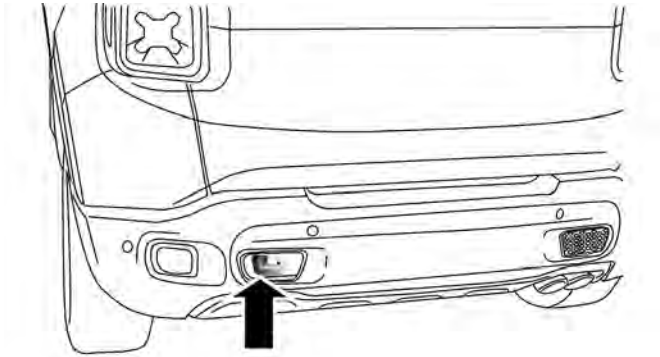

Rear Tow Hook Location

Place the ignition in the ON/RUN position, without opening the door. During towing remember that not having the aid of the power brakes and the electromechanical power steering, greater force is needed in applying the brakes and steering of the vehicle.

WARNING!

- **Do not use a chain for freeing a stuck vehicle. Chains may break, causing serious injury or death.**
- **Stand clear of vehicles when pulling with tow hooks. Tow straps may become disengaged, causing serious injury.**

CAUTION!

Tow hooks are for emergency use only, to rescue a vehicle stranded off road. Do not use tow hooks for tow truck hookup or highway towing. You could damage your vehicle.

ENHANCED ACCIDENT RESPONSE SYSTEM (EARS)

This vehicle is equipped with an Enhanced Accident Response System.

Please refer to "Occupant Restraint Systems" in "Safety" for further information on the Enhanced Accident Response System (EARS) function.

EVENT DATA RECORDER (EDR)

This vehicle is equipped with an Event Data Recorder (EDR). The main purpose of an EDR is to record data that will assist in understanding how a vehicle's systems performed under certain crash or near crash-like situations, such as an air bag deployment or hitting a road obstacle.

Please refer to "Occupant Restraint Systems" in "Safety" for further information on the Event Data Recorder (EDR).

SERVICING AND MAINTENANCE

CONTENTS

■ SCHEDULED SERVICING 431
- □ Maintenance Plan. 432

■ ENGINE COMPARTMENT 438
- □ 1.3L Turbo Engine 438
- □ 2.4L Engine 439
- □ Checking Oil Level 440
- □ Cooling System 440
- □ Adding Washer Fluid 441
- □ Maintenance-Free Battery 441

■ DEALER SERVICE 442
- □ Engine Oil 442
- □ Engine Oil Filter 444
- □ Engine Air Cleaner Filter 444
- □ Air Conditioner Maintenance 445
- □ Body Lubrication 446
- □ Windshield Wiper Blades 446
- □ Exhaust System 448
- □ Cooling System 450
- □ Brake System 454
- □ Manual Transmission — If Equipped 456
- □ Automatic Transmission — If Equipped 456

■ RAISING THE VEHICLE 458

■ TIRES 458
- □ Tire Safety Information 458
- □ Tires — General Information 468
- □ Tire Types 474
- □ Spare Tires — If Equipped 475
- □ Wheel And Wheel Trim Care 477

- Tire Chains (Traction Devices) 478
- Tire Rotation Recommendations 480

■ DEPARTMENT OF TRANSPORTATION UNIFORM TIRE QUALITY GRADES 481

- Treadwear 481
- Traction Grades 482
- Temperature Grades 482

■ STORING THE VEHICLE 482

■ BODYWORK 483

- Protection From Atmospheric Agents 483
- Body And Underbody Maintenance 484
- Preserving The Bodywork 484

■ INTERIORS 485

- Seats And Fabric Parts 485
- Plastic And Coated Parts. 486
- Leather Parts 487
- Glass Surfaces 487

SCHEDULED SERVICING

Your vehicle is equipped with an automatic oil change indicator system. The oil change indicator system will remind you that it is time to take your vehicle in for scheduled maintenance.

Based on engine operation conditions, the oil change indicator message will illuminate in the instrument cluster. This means that service is required for your vehicle. Operating conditions such as frequent short-trips, trailer tow and extremely hot or cold ambient temperatures will influence when the "Change Oil" or "Oil Change Required" message is displayed. Severe Operating Conditions can cause the change oil message to illuminate as early as 3,500 miles (5,600 km) since last reset. Have your vehicle serviced as soon as possible, within the next 500 miles (805 km).

An authorized dealer will reset the oil change indicator message after completing the scheduled oil change.

NOTE: Under no circumstances should oil change intervals exceed 10,000 miles (16,000 km), one year or 350 hours of engine run time, whichever comes first. The 350 hours of engine run or idle time is generally only a concern for fleet customers.

Severe Duty All Models

Change Engine Oil at 4,000 miles (6,500 km) or 350 hours of engine run time if the vehicle is operated in a dusty and off road environment or is operated predominately at idle or only very low engine RPM's. This type of vehicle use is considered Severe Duty.

NOTE: The Oil Change Indicator will not illuminate under these conditions.

Once A Month Or Before A Long Trip:

- Check engine oil level.
- Check windshield washer fluid level.
- Check the tire inflation pressures and look for unusual wear or damage.
- Check the fluid levels of the coolant reservoir, and brake master cylinder reservoir, and fill as needed.
- Check function of all interior and exterior lights.

Maintenance Plan

Required Maintenance Intervals.

At Every Oil Change Interval As Indicated By Oil Change Indicator System:
Change oil and filter.
Inspect battery and clean and tighten terminals as required.
Inspect brake pads, shoes, rotors, drums, and hoses.
Inspect engine cooling system protection and hoses.
Rotate the tires, **Rotate at the first sign of irregular wear, even if it occurs before the oil indicator system turns on.**
Inspect exhaust system.
Inspect engine air filter if using in dusty or off-road conditions.

Refer to the “Maintenance Chart” on the following page for the required maintenance intervals.

Mileage or time passed (whichever comes first)	10,000	20,000	30,000	40,000	50,000	60,000	70,000	80,000	90,000	100,000	110,000	120,000	130,000	140,000	150,000
Or Years:	1	2	3	4	5	6	7	8	9	10	11	12	13	14	15
Or Kilometers:	16,000	32,000	48,000	64,000	80,000	96,000	112,000	128,000	144,000	160,000	176,000	192,000	208,000	224,000	240,000
Check tire condition/wear and adjust pressure, if necessary, check Tire Service Kit expiration date (if equipped).	•	•	•	•	•	•	•	•	•	•	•	•	•	•	•
Check operation of lighting system (headlamps, direction indicators, hazard warning lights, luggage compartment, passenger compartment, glove compartment, instrument panel warning lights, etc.).	•	•	•	•	•	•	•	•	•	•	•	•	•	•	•
Check and, if necessary, top up fluid levels (brakes/hydraulic clutch, windshield washer, battery, engine coolant, etc.).1	•	•	•	•	•	•	•	•	•	•	•	•	•	•	•
Check engine control system operation (via diagnostic tool).2	•	•	•	•	•	•	•	•	•	•	•	•	•	•	•

Mileage or time passed (whichever comes first)	10,000	20,000	30,000	40,000	50,000	60,000	70,000	80,000	90,000	100,000	110,000	120,000	130,000	140,000	150,000
Or Years:	1	2	3	4	5	6	7	8	9	10	11	12	13	14	15
Or Kilometers:	16,000	32,000	48,000	64,000	80,000	96,000	112,000	128,000	144,000	160,000	176,000	192,000	208,000	224,000	240,000
Visually inspect condition of: exterior bodywork, underbody protection, pipes and hoses (exhaust - fuel system - brakes), rubber elements (boots, sleeves, bushings, etc.).	•		•		•		•		•		•		•		•
Check windshield/rear window wiper blade position/wear.	•		•		•		•		•		•		•		•
Check operation of windshield washer system and adjust jets if necessary.	•		•		•		•		•		•		•		•
Check cleanliness of hood and tailgate locks and cleanliness and lubrication of linkages.		•		•		•		•		•		•		•	
Visually check the condition and wear of the front and rear brakes.	•	•	•	•	•	•	•	•	•	•	•	•	•	•	•
Check the front suspension, tie rods, CV joints and replace if necessary.		•		•		•		•		•		•		•	

Mileage or time passed (whichever comes first)	10,000	20,000	30,000	40,000	50,000	60,000	70,000	80,000	90,000	100,000	110,000	120,000	130,000	140,000	150,000
Or Years:	1	2	3	4	5	6	7	8	9	10	11	12	13	14	15
Or Kilometers:	16,000	32,000	48,000	64,000	80,000	96,000	112,000	128,000	144,000	160,000	176,000	192,000	208,000	224,000	240,000
Visual inspect the condition of the accessory drive belt.3				•				•				•			
Check the tension of the accessory drive belt.		•								•					
Inspect and replace, if required, front end accessory drive belt, tensioner, and, idler pulley.3								•							•
Inspect and replace PCV valve if necessary.										•					
Change engine oil and replace oil filter.*															
Inspect the PTU fluid level.				•				•				•			
Inspect the rear differential fluid level.				•				•				•			
Replace spark plugs (1.3L Turbo Engine)**				•				•				•			
Replace spark plugs (2.4L Engine)**										•					
Replace engine air filter. #		•		•		•		•		•		•		•	

Mileage or time passed (whichever comes first)	10,000	20,000	30,000	40,000	50,000	60,000	70,000	80,000	90,000	100,000	110,000	120,000	130,000	140,000	150,000
Or Years:	1	2	3	4	5	6	7	8	9	10	11	12	13	14	15
Or Kilometers:	16,000	32,000	48,000	64,000	80,000	96,000	112,000	128,000	144,000	160,000	176,000	192,000	208,000	224,000	240,000
Replace brake fluid every two years. ***		•		•		•		•		•		•		•	
Replace cabin filter.	○	•	○	•	○	•	○	•	○	•	○	•	○	•	○
Change the manual transmission fluid if using your vehicle for any of the following: trailer towing, heavy loading, taxi, police, delivery service (commercial service), off-road, desert operation or more than 50% of your driving is at sustained speeds during hot weather, above 90°F (32°C).					•										•
Flush and replace the engine coolant at 10 years or 150,000 miles (240,000 km) whichever comes first.										•					•

○ Recommend replacement

• Mandatory service

The engine air cleaner should be inspected at every oil change if used in dusty areas.

* The oil and oil filter replacement must be carried out when indicated by a warning light or message on the instrument panel, or in any case should not exceed 1 year or 10,000 miles (16,000 km).

** The spark plug change is distance based only, yearly intervals do not apply. The following are essential to ensure correct operation and prevent serious damage to the engine:

- Only use spark plugs of the same make and type which are specially certified for such engines (refer to "Fluids and Lubricants" in "Technical Specifications" for further information).
- Strictly comply with the spark plug replacement interval given in the "Maintenance Schedule" for spark plug replacement.
- Contact an authorized dealer if you have any questions.

*** The brake fluid change interval is time based only, mileage intervals do not apply.

1 Always only use the liquids shown in the handbook for topping up after having checked that the system is not damage.

2 If the engine oil quality detected by the vehicle diagnostics is lower than 20%, it is advisable to replace the engine oil and engine filter in order to avoid another service operation after a short time.

3 The maximum mileage is 75000 miles (120,000 km). The belt must be replaced every 6 years, regardless of distance travelled. If the vehicle is used in heavy conditions (dusty areas, cold climates, urban driving, long periods of idling), the maximum mileage is 37,500 miles (60,000 km). The belt must be replaced every 4 years regardless of the mileage.

WARNING!

- **You can be badly injured working on or around a motor vehicle. Do only service work for which you have the knowledge and the right equipment. If you have any doubt about your ability to perform a service job, take your vehicle to a competent mechanic.**
- **Failure to properly inspect and maintain your vehicle could result in a component malfunction and effect vehicle handling and performance. This could cause an accident.**

ENGINE COMPARTMENT

1.3L Turbo Engine

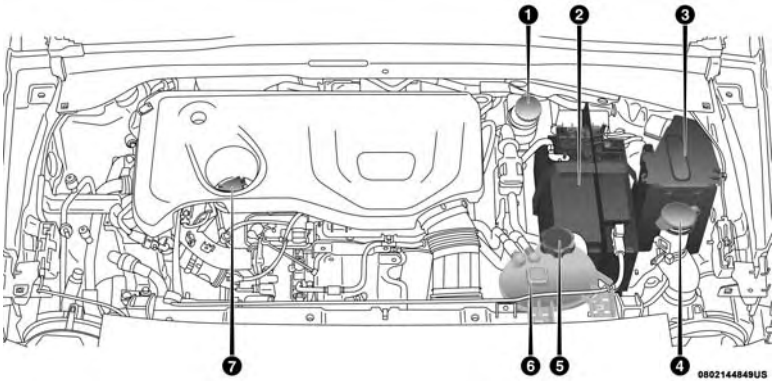

1 — Brake Fluid Reservoir
2 — Battery
3 — Power Distribution Center (Fuses)
4 — Washer Fluid Reservoir
5 — Engine Coolant Pressure Cap
6 — Engine Coolant Reservoir
7 — Oil Fill Cap/Engine Oil Dipstick

2.4L Engine

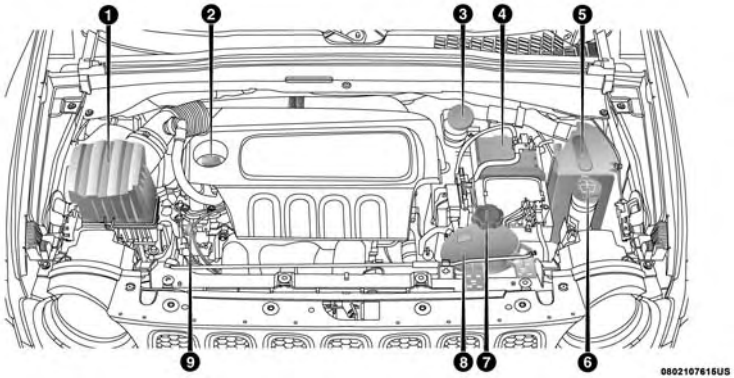

1 — Engine Air Cleaner Filter
2 — Engine Oil Fill Cap
3 — Brake Fluid Reservoir
4 — Battery
5 — Power Distribution Center (Fuses)
6 — Washer Fluid Reservoir
7 — Coolant Pressure Bottle Cap
8 — Coolant Pressure Bottle
9 — Engine Oil Dipstick

Checking Oil Level

To assure proper engine lubrication, the engine oil must be maintained at the correct level. Check the oil level at regular intervals, such as every fuel stop. The best time to check the engine oil level is about five minutes after a fully warmed up engine is shut off.

Checking the oil while the vehicle is on level ground will improve the accuracy of the oil level readings.

There are three possible dipstick types,

- Crosshatched zone.
- Crosshatched zone marked SAFE.
- Crosshatched zone marked with MIN at the low end of the range and MAX at the high end of the range.
- Crosshatched zone marked with dimples at the MIN and the MAX ends of the range.

NOTE: Always maintain the oil level within the crosshatch markings on the dipstick.

Adding 1 quart (1.0 liters) of oil when the reading is at the low end of the dipstick range will raise the oil level to the high end of the range marking.

CAUTION!

Overfilling or underfilling the crankcase will cause aeration or loss of oil pressure. This could damage your engine.

Cooling System

WARNING!

- **You or others can be badly burned by hot engine coolant (antifreeze) or steam from your radiator. If you see or hear steam coming from under the hood, do not open the hood until the radiator has had time to cool. Never open a cooling system pressure cap when the radiator or coolant bottle is hot.**
- **Keep hands, tools, clothing, and jewelry away from the radiator cooling fan when the hood is raised. The fan starts automatically and may start at any time, whether the engine is running or not.**
- **When working near the radiator cooling fan, disconnect the fan motor lead or turn the ignition to the OFF mode. The fan is temperature controlled and can start at any time the ignition is in the ON mode.**

Coolant Checks

Check engine coolant (antifreeze) protection every 12 months (before the onset of freezing weather, where applicable). If the engine coolant (antifreeze) is dirty or rusty in appearance, the system should be drained, flushed and refilled with fresh engine coolant (antifreeze). Check the front of the A/C condenser for any accumulation of bugs, leaves, etc. If dirty, clean by gently spraying water from a garden hose vertically down the face of the condenser.

Adding Washer Fluid

The windshield washer fluid reservoir is located in the engine compartment, and the fluid level should be checked at regular intervals. Fill the reservoir with windshield washer solvent (not engine coolant/ antifreeze). Refer to "Engine Compartment" in this section for further information.

WARNING!

Commercially available windshield washer solvents are flammable. They could ignite and burn you. Care must be exercised when filling or working around the washer solution.

Maintenance-Free Battery

Your vehicle is equipped with a maintenance-free battery. You will never have to add water, nor is periodic maintenance required.

WARNING!

- **Battery fluid is a corrosive acid solution and can burn or even blind you. Do not allow battery fluid to contact your eyes, skin, or clothing. Do not lean over a battery when attaching clamps. If acid splashes in eyes or on skin, flush the area immediately with large amounts of water. Refer to "Jump Starting Procedure" in "In Case Of Emergency" for further information.**
- **Battery gas is flammable and explosive. Keep flame or sparks away from the battery. Do not use a booster battery or any other booster source with an output greater than 12 Volts. Do not allow cable clamps to touch each other.**
- **Battery posts, terminals, and related accessories contain lead and lead compounds. Wash hands after handling.**

CAUTION!

- **It is essential when replacing the cables on the battery that the positive cable is attached to the positive post and the negative cable is attached to the negative post. Battery posts are marked positive (+) and negative (-) and are identified on the battery case. Cable clamps should be tight on the terminal posts and free of corrosion.**
- **If a "fast charger" is used while the battery is in the vehicle, disconnect both vehicle battery cables before connecting the charger to the battery. Do not use a "fast charger" to provide starting voltage.**

DEALER SERVICE

An authorized dealer has the qualified service personnel, special tools, and equipment to perform all service operations in an expert manner. Service Manuals are available which include detailed service information for your vehicle. Refer to these Service Manuals before attempting any procedure yourself.

NOTE: Intentional tampering with emissions control systems may void your warranty and could result in civil penalties being assessed against you.

WARNING!

You can be badly injured working on or around a motor vehicle. Only do service work for which you have the knowledge and the proper equipment. If you have any doubt about your ability to perform a service job, take your vehicle to a competent mechanic.

Engine Oil

Checking Oil Level

To assure proper engine lubrication, the engine oil must be maintained at the correct level. Check the oil level at regular intervals, such as every fuel stop. The best time to check the engine oil level is about five minutes after a fully warmed up engine is shut off.

Checking the oil while the vehicle is on level ground will improve the accuracy of the oil level readings.

There are three possible dipstick types,

- Crosshatched zone.
- Crosshatched zone marked SAFE.
- Crosshatched zone marked with MIN at the low end of the range and MAX at the high end of the range.

- Crosshatched zone marked with dimples at the MIN and the MAX ends of the range.

NOTE: Always maintain the oil level within the crosshatch markings on the dipstick.

Adding 1 quart (1.0 liters) of oil when the reading is at the low end of the dipstick range will raise the oil level to the high end of the range marking.

CAUTION!

Overfilling or underfilling the crankcase will cause aeration or loss of oil pressure. This could damage your engine.

Change Engine Oil — Gasoline Engine

Refer to "Scheduled Servicing" in this section for the proper maintenance intervals.

NOTE: Under no circumstances should oil change intervals exceed 10,000 miles (16,000 km), 12 months or 350 hours of engine run time, whichever comes first. The 350 hours of engine run or idle time is generally only a concern for fleet customers.

Engine Oil Selection — 1.3L Turbo Engine

For best performance and maximum protection for turbocharged engines under all types of operating conditions, the manufacturer recommends synthetic engine oils that are API Certified and meet the requirements of FCA Material Standard MS-13340.

Engine Oil Selection — 2.4L Engine

For best performance and maximum protection under all types of operating conditions, the manufacturer only recommends 0W-20 engine oils that are API Certified and meet the requirements of FCA Material Standard MS-6395.

Engine Oil Viscosity (SAE Grade) — 1.3L Turbo Engine

Mopar SAE 0W-30 SN PLUS synthetic engine oil approved to FCA Material Standard MS-13340 such as Pennzoil, Shell Helix or equivalent is recommended for all operating temperatures. This engine oil improves low temperature starting and vehicle fuel economy.

The engine oil filler cap also shows the recommended engine oil viscosity for your engine. For information on engine oil filler cap location, refer to "Engine Compartment" in this section.

Lubricants which do not have both the engine oil certification mark and the correct SAE viscosity grade number should not be used.

Engine Oil Viscosity (SAE Grade) — 2.4L Engine

Mopar SAE 0W-20 engine oil approved to FCA Material Standard MS-6395 such as Pennzoil, Shell Helix or equivalent is recommended for all operating temperatures. This engine oil improves low temperature starting and vehicle fuel economy.

The engine oil filler cap also shows the recommended engine oil viscosity for your engine. For information on engine oil filler cap location, refer to "Engine Compartment" in this section.

Lubricants which do not have both the engine oil certification mark and the correct SAE viscosity grade number should not be used.

Materials Added To Engine Oil

The manufacturer strongly recommends against the addition of any additives (other than leak detection dyes) to the engine oil. Engine oil is an engineered product and its performance may be impaired by supplemental additives.

Disposing Of Used Engine Oil And Oil Filters

Care should be taken in disposing of used engine oil and oil filters from your vehicle. Used oil and oil filters, indiscriminately discarded, can present a problem to the environment. Contact an authorized dealer, service station or governmental agency for advice on how and where used oil and oil filters can be safely discarded in your area.

Engine Oil Filter

The engine oil filter should be replaced with a new filter at every engine oil change.

Engine Oil Filter Selection

This manufacturer's engines have a full-flow type disposable oil filter. Use a filter of this type for replacement. The quality of replacement filters varies considerably. Only high quality filters should be used to assure most efficient service. Mopar engine oil filters are high quality oil filters and are recommended.

Engine Air Cleaner Filter

Refer to the "Maintenance Plan" in this section for the proper maintenance intervals.

WARNING!

The air induction system (air cleaner, hoses, etc.) can provide a measure of protection in the case of engine backfire. Do not remove the air induction system (air cleaner, hoses, etc.) unless such removal is necessary for repair or maintenance. Make sure that no one is near the engine compartment before starting the vehicle with the air induction system (air cleaner, hoses, etc.) removed. Failure to do so can result in serious personal injury.

Air Conditioner Maintenance

For best possible performance, your air conditioner should be checked and serviced by an authorized dealer at the start of each warm season. This service should include cleaning of the condenser fins and a performance test. Drive belt tension should also be checked at this time.

NOTE:

- Use only refrigerants and compressor lubricants approved by the manufacturer for your air conditioning system. Some unapproved refrigerants are flammable and can explode, injuring you. Other unapproved refrigerants or lubricants can cause the system to fail, requiring costly repairs. Refer to the Warranty Information Book for further warranty information.
- Use only refrigerants and compressor lubricants approved by the manufacturer for your air conditioning system. Some unapproved refrigerants are flammable and can explode, injuring you. Other unapproved refrigerants or lubricants can cause the system to fail, requiring costly repairs.
- The air conditioning system contains refrigerant under high pressure. To avoid risk of personal injury or damage to the system, adding refrigerant or any repair requiring lines to be disconnected should be done by an experienced technician.

CAUTION!

Do not use chemical flushes in your air conditioning system as the chemicals can damage your air conditioning components. Such damage is not covered by the New Vehicle Limited Warranty.

Refrigerant Recovery And Recycling — R–1234yf

R–1234yf Air Conditioning Refrigerant is a hydrofluoroolefin (HFO) that is endorsed by the Environmental Protection Agency and is an ozone-friendly substance with a low global-warming potential. The manufacturer recommends that air conditioning service be performed by an authorized dealer using recovery and recycling equipment.

NOTE: Use only manufacturer approved A/C system PAG compressor oil, and refrigerants.

A/C Air Filter

See your authorized dealer for service.

Body Lubrication

Locks and all body pivot points, including such items as seat tracks, door hinge pivot points and rollers, liftgate, tailgate, decklid, sliding doors and hood hinges, should be lubricated periodically with a lithium based grease, such as Mopar Spray White Lube to assure quiet, easy operation and to protect against rust and wear. Prior to the application of any lubricant, the parts concerned should be wiped clean to remove dust and grit; after lubricating excess oil and grease should be removed. Particular attention should also be given to hood latching components to ensure proper function. When performing other underhood services, the hood latch, release mechanism and safety catch should be cleaned and lubricated.

The external lock cylinders should be lubricated twice a year, preferably in the Fall and Spring. Apply a small amount of a high quality lubricant, such as Mopar Lock Cylinder Lubricant directly into the lock cylinder.

Windshield Wiper Blades

Clean the rubber edges of the wiper blades and the windshield periodically with a sponge or soft cloth and a mild nonabrasive cleaner. This will remove accumulations of salt or road film.

Operation of the wipers on dry glass for long periods may cause deterioration of the wiper blades. Always use washer fluid when using the wipers to remove salt or dirt from a dry windshield.

Avoid using the wiper blades to remove frost or ice from the windshield. Keep the blade rubber out of contact with petroleum products such as engine oil, gasoline, etc.

NOTE: Life expectancy of wiper blades varies depending on geographical area and frequency of use. Poor performance of blades may be present with chattering, marks, water lines or wet spots. If any of these conditions are present, clean the wiper blades or replace as necessary.

Service Position Strategy

The service position allows the wiper blades to be placed in a position that allows the wiper blades to be easily changed.

To enable the Service Position Strategy, the wipers must be in the Park position before placing the ignition in the STOP/OFF position.

Service mode must be activated within two minutes after the ignition is placed in the STOP/OFF position.

To have a correct activation of strategy, the Service Position command (antipanic) must be active for at least half a second.

At every valid activation of Service Position command, the wiper blades are activated for 250 ms.

The Service Position command can be repeated several times to bring the blades into the desired position, up to a maximum of three times.

After three subsequent activations the strategy is disabled.

Function Deactivation:

The functionality is reset if:

- The ignition is turned to the MAR/RUN position.
- Number of subsequent activations is three.
- Two minutes timer has expired after turning the ignition OFF.

NOTE: When turning the ignition ON, the blades will go into the parking position.

Front Wiper Blade Removal/Installation

1. Lift the front wiper arm upward to raise the wiper blade off of the windshield.
2. Push the release button on the arm of the wiper blade.
3. Push the wiper blade up and remove it.

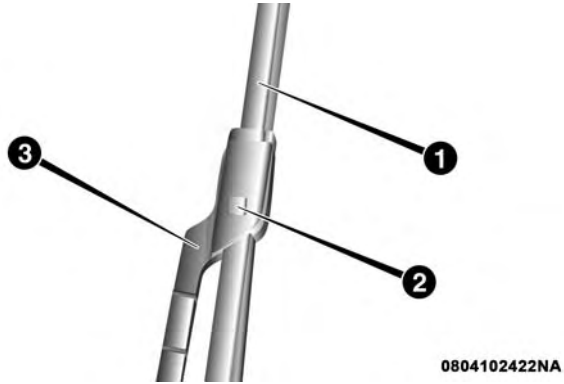

1 — Wiper Blade
2 — Release Button
3 — Wiper Arm

4. Install the wiper blade and firmly push the wiper blade until it snaps into place.

Rear Wiper Blade Removal/Installation

1. Carefully lift the rear wiper arm upward to raise the wiper blade off of the liftgate glass.
2. Grab and hold the wiper arm closest to the wiper blade end while pushing the wiper blade towards the liftgate glass to unsnap the blade pivot pin from the wiper blade holder on the wiper arm.
3. Install the wiper blade pivot pin into the wiper blade holder at the end of the wiper arm, and firmly push the wiper blade until it snaps into place.

Exhaust System

The best protection against carbon monoxide entry into the vehicle body is a properly maintained engine exhaust system.

If you notice a change in the sound of the exhaust system; or if the exhaust fumes can be detected inside the vehicle; or when the underside or rear of the vehicle is damaged; have an authorized technician inspect the complete exhaust system and adjacent body areas for broken, damaged, deteriorated, or mispositioned parts. Open seams or loose connections could permit exhaust fumes to seep into the passenger compartment. In addition, have the exhaust system inspected each time the vehicle is raised for lubrication or oil change. Replace as required.

WARNING!

- **Exhaust gases can injure or kill. They contain carbon monoxide (CO), which is colorless and odorless. Breathing it can make you unconscious and can eventually poison you. To avoid breathing CO, refer to "Safety Tips" in "Safety" for further information.**
- **A hot exhaust system can start a fire if you park over materials that can burn. Such materials might be grass or leaves coming into contact with your exhaust system. Do not park or operate your vehicle in areas where your exhaust system can contact anything that can burn.**

CAUTION!

- **The catalytic converter requires the use of unleaded fuel only. Leaded gasoline will destroy the effectiveness of the catalyst as an emissions control device and may seriously reduce engine performance and cause serious damage to the engine.**

(Continued)

CAUTION! ***(Continued)***

- **Damage to the catalytic converter can result if your vehicle is not kept in proper operating condition. In the event of engine malfunction, particularly involving engine misfire or other apparent loss of performance, have your vehicle serviced promptly. Continued operation of your vehicle with a severe malfunction could cause the converter to overheat, resulting in possible damage to the converter and vehicle.**

Under normal operating conditions, the catalytic converter will not require maintenance. However, it is important to keep the engine properly tuned to assure proper catalyst operation and prevent possible catalyst damage.

NOTE: Intentional tampering with emissions control systems can result in civil penalties being assessed against you.

In unusual situations involving grossly malfunctioning engine operation, a scorching odor may suggest severe and abnormal catalyst overheating. If this occurs, stop the vehicle, turn off the engine and allow it to cool. Service, including a tune-up to manufacturer's specifications, should be obtained immediately.

To minimize the possibility of catalytic converter damage:

- Do not interrupt the ignition when the transmission is in gear and the vehicle is in motion.
- Do not try to start the vehicle by pushing or towing the vehicle.
- Do not idle the engine with any ignition components disconnected or removed, such as when diagnostic testing, or for prolonged periods during very rough idle or malfunctioning operating conditions.

Cooling System

WARNING!

- **You or others can be badly burned by hot engine coolant (antifreeze) or steam from your radiator. If you see or hear steam coming from under the hood, do not open the hood until the radiator has had time to cool. Never open a cooling system pressure cap when the radiator or coolant bottle is hot.**
- **Keep hands, tools, clothing, and jewelry away from the radiator cooling fan when the hood is raised. The fan starts automatically and may start at any time, whether the engine is running or not.**

(Continued)

WARNING! ***(Continued)***

- **When working near the radiator cooling fan, disconnect the fan motor lead or turn the ignition to the OFF mode. The fan is temperature controlled and can start at any time the ignition is in the ON mode.**

Coolant Checks

Check engine coolant (antifreeze) protection every 12 months (before the onset of freezing weather, where applicable). If the engine coolant (antifreeze) is dirty or rusty in appearance, the system should be drained, flushed and refilled with fresh engine coolant (antifreeze). Check the front of the A/C condenser for any accumulation of bugs, leaves, etc. If dirty, clean by gently spraying water from a garden hose vertically down the face of the condenser.

Cooling System — Drain, Flush And Refill

NOTE: Some vehicles require special tools to add coolant properly. Failure to fill these systems properly could lead to severe internal engine damage. If any coolant is needed to be added to the system please contact an authorized dealer.

If the engine coolant (antifreeze) is dirty or contains visible sediment, have an authorized dealer clean and flush with OAT coolant (antifreeze) (conforming to MS.90032).

Refer to the "Maintenance Plan" in this section for the proper maintenance intervals.

Selection Of Coolant

Refer to "Fluids And Lubricants" in "Technical Specifications" for further information.

NOTE:

- Mixing of engine coolant (antifreeze) other than specified Organic Additive Technology (OAT) engine coolant (antifreeze), may result in engine damage and may decrease corrosion protection. Organic Additive Technology (OAT) engine coolant is different and should not be mixed with Hybrid Organic Additive Technology (HOAT) engine coolant (antifreeze) or any "globally compatible" coolant (antifreeze). If a non-OAT engine coolant (antifreeze) is introduced into the cooling system in an emergency, the cooling system will need to be drained, flushed, and refilled with fresh OAT coolant (conforming to MS.90032), by an authorized dealer as soon as possible.
- Do not use water alone or alcohol-based engine coolant (antifreeze) products. Do not use additional rust inhibitors or antirust products, as they may not be compatible with the radiator engine coolant and may plug the radiator.
- This vehicle has not been designed for use with propylene glycol-based engine coolant (antifreeze). Use of propylene glycolbased engine coolant (antifreeze) is not recommended.
- Some vehicles require special tools to add coolant properly. Failure to fill these systems properly could lead to severe internal engine damage. If any coolant is needed to be added to the system please contact an authorized dealer.

Adding Coolant

Your vehicle has been built with an improved engine coolant (OAT coolant conforming to MS.90032) that allows extended maintenance intervals. This engine coolant (antifreeze) can be used up to ten years or 150,000 miles (240,000 km) before replacement. To prevent reducing this extended maintenance period, it is important that you use the same engine coolant (OAT coolant conforming to MS.90032) throughout the life of your vehicle.

Please review these recommendations for using Organic Additive Technology (OAT) engine coolant (antifreeze) that meets the requirements of FCA Material Standard MS.90032. When adding engine coolant (antifreeze):

- We recommend using Mopar Antifreeze/Coolant 10 Year/150,000 Mile Formula OAT (Organic Additive Technology) that meets the requirements of FCA Material Standard MS.90032.
- Mix a minimum solution of 50% OAT engine coolant that meets the requirements of FCA Material Standard MS.90032 and distilled water. Use higher concentrations (not to exceed 70%) if temperatures below –34°F (–37°C) are anticipated. Please contact an authorized dealer for assistance.
- Use only high purity water such as distilled or deionized water when mixing the water/engine coolant (antifreeze) solution. The use of lower quality water will reduce the amount of corrosion protection in the engine cooling system.

NOTE:

- It is the owner's responsibility to maintain the proper level of protection against freezing according to the temperatures occurring in the area where the vehicle is operated.
- Some vehicles require special tools to add coolant properly. Failure to fill these systems properly could lead to severe internal engine damage. If any coolant is needed to be added to the system, please contact an local authorized dealer.
- Mixing engine coolant (antifreeze) types is not recommended and can result in cooling system damage. If HOAT and OAT coolant are mixed in an emergency, have a authorized dealer drain, flush, and refill with OAT coolant (conforming to MS.90032) as soon as possible.

Cooling System Pressure Cap

The cap must be fully tightened to prevent loss of engine coolant (antifreeze), and to ensure that engine coolant (antifreeze) will return to the radiator from the coolant expansion bottle/recovery tank if so equipped.

The cap should be inspected and cleaned if there is any accumulation of foreign material on the sealing surfaces.

WARNING!

- **Do not open hot engine cooling system. Never add engine coolant (antifreeze) when the engine is overheated. Do not loosen or remove the cap to cool an overheated engine. Heat causes pressure to build up in the cooling system. To prevent scalding or injury, do not remove the pressure cap while the system is hot or under pressure.**
- **Do not use a pressure cap other than the one specified for your vehicle. Personal injury or engine damage may result.**

Disposal Of Used Coolant

Used ethylene glycol-based coolant (antifreeze) is a regulated substance requiring proper disposal. Check with your local authorities to determine the disposal rules for your community. To prevent ingestion by animals or children, do not store ethylene glycol-based coolant in open containers or allow it to remain in puddles on the ground. If ingested by a child or pet, seek emergency assistance immediately. Clean up any ground spills immediately.

Coolant Level

The coolant expansion bottle provides a quick visual method for determining that the coolant level is adequate. With the engine off and cold, the level of the coolant (antifreeze) in the bottle should be between the “MAX” and “MIN” lines marked on the bottle.

As long as the engine operating temperature is satisfactory, the coolant bottle need only be checked once a month.

When additional coolant (antifreeze) is needed to maintain the proper level, it should be added to the coolant bottle. Do not overfill.

See an authorized dealer for service.

Points To Remember

NOTE: When the vehicle is stopped after a few miles/kilometers of operation, you may observe vapor coming from the front of the engine compartment. This is normally a result of moisture from rain, snow, or high humidity accumulating on the radiator and being vaporized when the thermostat opens, allowing hot engine coolant (antifreeze) to enter the radiator.

If an examination of your engine compartment shows no evidence of radiator or hose leaks, the vehicle may be safely driven. The vapor will soon dissipate.

- Do not overfill the coolant expansion bottle.
- Check the coolant freeze point in the radiator and in the coolant expansion bottle. If engine coolant (antifreeze) needs to be added, the contents of the coolant expansion bottle must also be protected against freezing.
- If frequent engine coolant (antifreeze) additions are required, the cooling system should be pressure tested for leaks.
- Maintain engine coolant (antifreeze) concentration at a minimum of 50% OAT coolant (conforming to MS.90032) and distilled water for proper corrosion protection of your engine which contains aluminum components.
- Keep the front of the radiator clean. If your vehicle is equipped with air conditioning, keep the front of the condenser clean.
- Do not change the thermostat for Summer or Winter operation. If replacement is ever necessary, install ONLY the correct type thermostat. Other designs may result in unsatisfactory engine coolant (antifreeze) performance, poor gas mileage, and increased emissions.

Brake System

In order to assure brake system performance, all brake system components should be inspected periodically. Refer to the “Maintenance Plan” in this section for the proper maintenance intervals.

WARNING!

Riding the brakes can lead to brake failure and possibly a collision. Driving with your foot resting or riding on the brake pedal can result in abnormally high brake temperatures, excessive lining wear, and possible brake damage. Riding the brakes may also reduce braking capacity in an emergency.

Brake Master Cylinder

The fluid level in the master cylinder should be checked when performing under hood services, or immediately if the “Brake Warning Light” is on.

Be sure to clean the top of the master cylinder area before removing the cap. If necessary, add fluid to bring the fluid level up to the requirements described on the brake fluid reservoir. Fluid level can be expected to fall as the brake pads wear. The brake fluid level should be checked when the pads are replaced. However, low fluid level may be caused by a leak and a checkup may be needed.

NOTE: If your vehicle is equipped with a **manual transmission**, the brake fluid reservoir supplies fluid to both the brake system and the clutch release system. The two systems are separated in the reservoir, and a leak in one system will not affect the other system. The **manual transmission** clutch release system should not require fluid replacement during the life of the vehicle. If the brake fluid reservoir is low and the brake system does not indicate any leaks or other problems, it may be a result of a leak in the hydraulic clutch release system. See an authorized dealer for service.

Use only manufacturer's recommended brake fluid. Refer to "Fluids And Lubricants" in the "Technical Specifications" section for further information.

WARNING!

- **Use only manufacturer's recommended brake fluid. Refer to "Fluids And Lubricants" in the "Technical Specifications" section for further information. Using the wrong type of brake fluid can severely damage your brake system and/or impair its performance. The proper type of brake fluid for your vehicle is also identified on the original factory installed hydraulic master cylinder reservoir.**
- **To avoid contamination from foreign matter or moisture, use only new brake fluid or fluid that has been in a tightly closed container. Keep the master cylinder reservoir cap secured at all times. Brake fluid in a open container absorbs moisture from the air resulting in a lower boiling point. This may cause it to boil unexpectedly during hard or prolonged braking, resulting in sudden brake failure. This could result in a collision.**
- **Overfilling the brake fluid reservoir can result in spilling brake fluid on hot engine parts, causing the brake fluid to catch fire. Brake fluid can also damage painted and vinyl surfaces, care should be taken to avoid its contact with these surfaces.**

CAUTION!

Use of improper brake fluids will affect overall clutch system performance. Improper brake fluids may damage the clutch system resulting in loss of clutch function and the ability to shift the transmission.

Manual Transmission — If Equipped

Lubricant Selection

Use only the manufacturers recommended transmission fluid. Refer to "Fluids And Lubricants" in "Technical Specifications" for further information.

Please see an authorized dealer for service.

Fluid Level Check

Check the fluid level by removing the fill plug. The fluid level should be between the bottom of the fill hole and a point not more than 3/16 inch (4.7 mm) below the bottom of the hole.

Add fluid, if necessary, to maintain the proper level.

Please see an authorized dealer for service.

Frequency Of Fluid Change

Under normal operating conditions, the fluid installed at the factory will give satisfactory lubrication for the life of the vehicle. Fluid changes are not necessary unless lubricant has become contaminated with water.

NOTE: If contaminated with water, the fluid should be changed immediately.

Automatic Transmission — If Equipped

Selection Of Lubricant

It is important to use the proper transmission fluid to ensure optimum transmission performance and life. Use only the manufacturer's specified transmission fluid. Refer to "Fluids And Lubricants" in "Technical Specifications" for fluid specifications. It is important to maintain the transmission fluid at the correct level using the recommended fluid.

NOTE: No chemical flushes should be used in any transmission; only the approved lubricant should be used.

CAUTION!

Using a transmission fluid other than the manufacturer's recommended fluid may cause deterioration in transmission shift quality and/or torque converter shudder. Refer to "Fluids And Lubricants" in "Technical Specifications" for fluid specifications.

Special Additives

The manufacturer strongly recommends against using any special additives in the transmission.

Automatic Transmission Fluid (ATF) is an engineered product and its performance may be impaired by supplemental additives. Therefore, do not add any fluid additives to the transmission. The only exception to this policy is the use of special dyes for diagnosing fluid leaks. Avoid using transmission sealers as they may adversely affect seals.

CAUTION!

Do not use chemical flushes in your transmission as the chemicals can damage your transmission components. Such damage is not covered by the New Vehicle Limited Warranty.

Fluid Level Check

The fluid level is preset at the factory and does not require adjustment under normal operating conditions. Routine fluid level checks are not required; therefore the transmission has no dipstick. An authorized dealer can check your transmission fluid level using special service tools. If you notice fluid leakage or transmission malfunction, visit an authorized dealer immediately to have the transmission fluid level checked. Operating the vehicle with an improper fluid level can cause severe transmission damage.

CAUTION!

If a transmission fluid leak occurs, visit an authorized dealer immediately. Severe transmission damage may occur. An authorized dealer has the proper tools to adjust the fluid level accurately.

Fluid And Filter Changes

Under normal operating conditions, the fluid installed at the factory will provide satisfactory lubrication for the life of the vehicle.

Routine fluid and filter changes are not required. However, change the fluid and filter if the fluid becomes contaminated (with water, etc.), or if the transmission is disassembled for any reason.

RAISING THE VEHICLE

In the case where it is necessary to raise the vehicle, go to an authorized dealer or service station.

The lifting points on the vehicle are marked on side skirts with symbols (▽ see example shown).

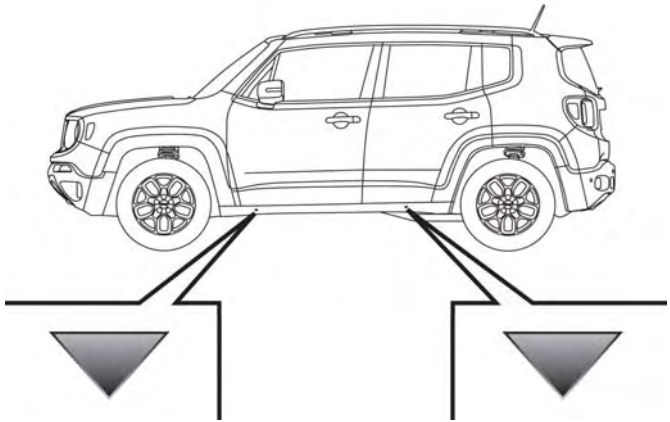

Lifting Point Locations

TIRES

Tire Safety Information

Tire safety information will cover aspects of the following information: Tire Markings, Tire Identification Numbers, Tire Terminology and Definitions, Tire Pressures, and Tire Loading.

Tire Markings

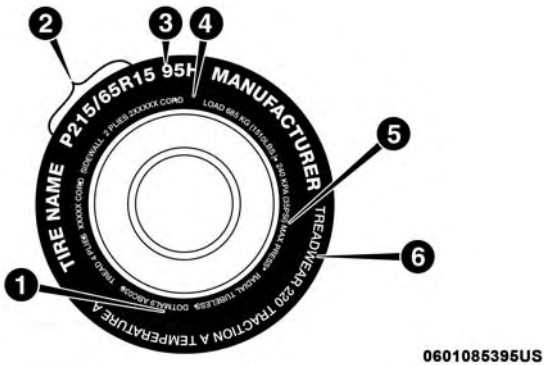

Tire Markings

1 — U.S. DOT Safety Standards Code (TIN)	4 — Maximum Load
2 — Size Designation	5 — Maximum Pressure
3 — Service Description	6 — Treadwear, Traction and Temperature Grades

NOTE:

- P (Passenger) — Metric tire sizing is based on U.S. design standards. P-Metric tires have the letter "P" molded into the sidewall preceding the size designation. Example: P215/65R15 95H.
- European — Metric tire sizing is based on European design standards. Tires designed to this standard have the tire size molded into the sidewall beginning with the section width. The letter "P" is absent from this tire size designation. Example: 215/65R15 96H.
- LT (Light Truck) — Metric tire sizing is based on U.S. design standards. The size designation for LT-Metric tires is the same as for P-Metric tires except for the letters "LT" that are molded into the sidewall preceding the size designation. Example: LT235/85R16.
- Temporary spare tires are designed for temporary emergency use only. Temporary high pressure compact spare tires have the letter "T" or "S" molded into the sidewall preceding the size designation. Example: T145/80D18 103M.
- High flotation tire sizing is based on U.S. design standards and it begins with the tire diameter molded into the sidewall. Example: 31x10.5 R15 LT.

Tire Sizing Chart

EXAMPLE:

Example Size Designation: P215/65R15XL 95H, 215/65R15 96H, LT235/85R16C, T145/80D18 103M, 31x10.5 R15 LT
P = Passenger car tire size based on U.S. design standards, or **"....blank...."** = Passenger car tire based on European design standards, or **LT** = Light truck tire based on U.S. design standards, or **T or S** = Temporary spare tire or **31** = Overall diameter in inches (in)
215, 235, 145 = Section width in millimeters (mm)
65, 85, 80 = Aspect ratio in percent (%) – Ratio of section height to section width of tire, or **10.5** = Section width in inches (in)
R = Construction code – "R" means radial construction, or – "D" means diagonal or bias construction
15, 16, 18 = Rim diameter in inches (in)

EXAMPLE:

Service Description:

95 = Load Index
– A numerical code associated with the maximum load a tire can carry

H = Speed Symbol
– A symbol indicating the range of speeds at which a tire can carry a load corresponding to its load index under certain operating conditions
– The maximum speed corresponding to the speed symbol should only be achieved under specified operating conditions (i.e., tire pressure, vehicle loading, road conditions, and posted speed limits)

Load Identification:
Absence of the following load identification symbols on the sidewall of the tire indicates a Standard Load (SL) tire:
- **XL** = Extra load (or reinforced) tire, or
- **LL** = Light load tire or
- **C, D, E, F, G** = Load range associated with the maximum load a tire can carry at a specified pressure

Maximum Load – Maximum load indicates the maximum load this tire is designed to carry

Maximum Pressure – Maximum pressure indicates the maximum permissible cold tire inflation pressure for this tire

Tire Identification Number (TIN)

The TIN may be found on one or both sides of the tire; however, the date code may only be on one side. Tires with white sidewalls will have the full TIN, including the date code, located on the white sidewall side of the tire. Look for the TIN on the outboard side of black sidewall tires as mounted on the vehicle. If the TIN is not found on the outboard side, then you will find it on the inboard side of the tire.

EXAMPLE:
DOT MA L9 ABCD 0301
DOT = Department of Transportation – This symbol certifies that the tire is in compliance with the U.S. Department of Transportation tire safety standards and is approved for highway use
MA = Code representing the tire manufacturing location (two digits)
L9 = Code representing the tire size (two digits)
ABCD = Code used by the tire manufacturer (one to four digits)
03 = Number representing the week in which the tire was manufactured (two digits) – 03 means the 3rd week
01 = Number representing the year in which the tire was manufactured (two digits) – 01 means the year 2001 – Prior to July 2000, tire manufacturers were only required to have one number to represent the year in which the tire was manufactured. Example: 031 could represent the 3rd week of 1981 or 1991

Tire Terminology And Definitions

Term	Definition
B-Pillar	The vehicle B-Pillar is the structural member of the body located behind the front door.
Cold Tire Inflation Pressure	Cold tire inflation pressure is defined as the tire pressure after the vehicle has not been driven for at least three hours, or driven less than 1 mile (1.6 km) after sitting for a minimum of three hours. Inflation pressure is measured in units of PSI (pounds per square inch) or kPa (kilopascals).
Maximum Inflation Pressure	The maximum inflation pressure is the maximum permissible cold tire inflation pressure for this tire. The maximum inflation pressure is molded into the sidewall.
Recommended Cold Tire Inflation Pressure	Vehicle manufacturer's recommended cold tire inflation pressure as shown on the tire placard.
Tire Placard	A label permanently attached to the vehicle describing the vehicle's loading capacity, the original equipment tire sizes and the recommended cold tire inflation pressures.

Tire Loading And Tire Pressure

NOTE: The proper cold tire inflation pressure is listed on the driver's side B-Pillar or the rear edge of the driver's side door.

Check the inflation pressure of each tire, including the spare tire (if equipped), at least monthly and inflate to the recommended pressure for your vehicle.

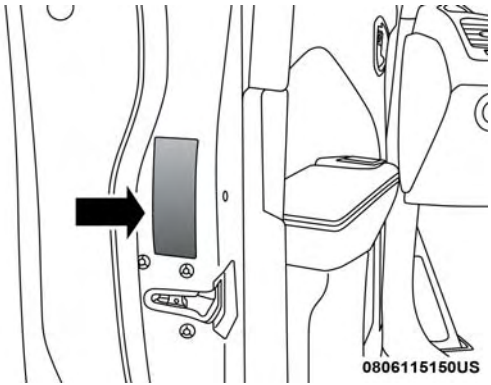

Example Tire Placard Location (Door)

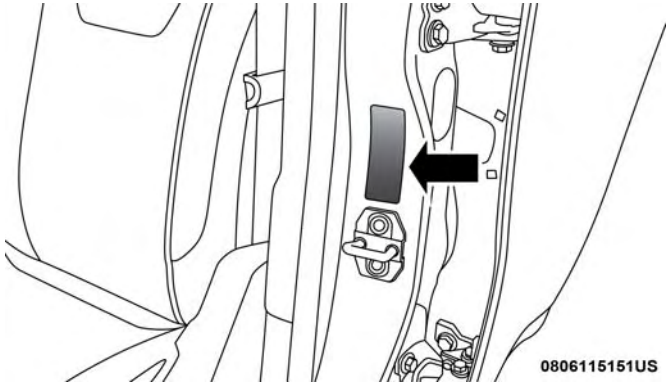

Example Tire Placard Location (B-Pillar)

Tire And Loading Information Placard

Tire And Loading Information Placard

This placard tells you important information about the:

1. Number of people that can be carried in the vehicle.
2. Total weight your vehicle can carry.
3. Tire size designed for your vehicle.
4. Cold tire inflation pressures for the front, rear, and spare tires.

Loading

The vehicle maximum load on the tire must not exceed the load carrying capacity of the tire on your vehicle. You will not exceed the tire's load carrying capacity if you adhere to the loading conditions, tire size, and cold tire inflation pressures specified on the Tire and Loading Information placard in "Vehicle Loading" in the "Starting And Operating" section of this manual.

NOTE: Under a maximum loaded vehicle condition, gross axle weight ratings (GAWRs) for the front and rear axles must not be exceeded.

For further information on GAWRs, vehicle loading, and trailer towing, refer to "Vehicle Loading" in the "Starting And Operating" section of this manual.

To determine the maximum loading conditions of your vehicle, locate the statement "The combined weight of occupants and cargo should never exceed XXX kg or XXX lbs" on the Tire and Loading Information placard. The combined weight of occupants, cargo/luggage and trailer tongue weight (if applicable) should never exceed the weight referenced here.

Steps For Determining Correct Load Limit—

(1) Locate the statement "The combined weight of occupants and cargo should never exceed XXX kg or XXX lbs." on your vehicle's placard.

(2) Determine the combined weight of the driver and passengers that will be riding in your vehicle.

(3) Subtract the combined weight of the driver and passengers from XXX kg or XXX lbs.

(4) The resulting figure equals the available amount of cargo and luggage load capacity. For example, if "XXX" amount equals 1400 lbs. and there will be five 150 lb passengers in your vehicle, the amount of available cargo and luggage load capacity is 650 lbs. (1400-750 (5x150) = 650 lbs.)

(5) Determine the combined weight of luggage and cargo being loaded on the vehicle. That weight may not safely exceed the available cargo and luggage load capacity calculated in Step 4.

(6) If your vehicle will be towing a trailer, load from your trailer will be transferred to your vehicle. Consult this manual to determine how this reduces the available cargo and luggage load capacity of your vehicle.

Metric Example For Load Limit

For example, if "XXX" amount equals 635 kg and there will be five 68 kg passengers in your vehicle, the amount of available cargo and luggage load capacity is 295 kg (635-340 (5x68) = 295 kg) as shown in step 4.

NOTE:

- If your vehicle will be towing a trailer, load from your trailer will be transferred to your vehicle. The following table shows examples on how to calculate total load, cargo/luggage, and towing capacities of your vehicle with varying seating configurations and number and size of occupants. This table is for illustration purposes only and may not be accurate for the seating and load carry capacity of your vehicle.
- For the following example, the combined weight of occupants and cargo should never exceed 865 lbs (392 kg).

Occupants			Combined weight of occupants and cargo from Tire Placard	MINUS	Combined Occupant's weight	=	AVAILABLE Cargo/Luggage and Trailer Tongue Weight
TOTAL	FRONT	REAR					
EXAMPLE 1							
5	2	3			Occupant 1: 200 lbs Occupant 2: 130 lbs Occupant 3: 160 lbs Occupant 4: 100 lbs Occupant 5: 80 lbs TOTAL WEIGHT: 670 lbs		
			865 lbs	minus	670 lbs	=	195 lbs
EXAMPLE 2							
3	2	1			Occupant 1: 210 lbs Occupant 2: 180 lbs Occupant 3: 150 lbs TOTAL WEIGHT: 540 lbs		
			865 lbs	minus	540 lbs	=	325 lbs
EXAMPLE 3							
2	2	0			Occupant 1: 200 lbs Occupant 2: 200 lbs TOTAL WEIGHT: 400 lbs		
			865 lbs	minus	400 lbs	=	465 lbs

EXAMPLE

811a4d11

WARNING!

Overloading of your tires is dangerous. Overloading can cause tire failure, affect vehicle handling, and increase your stopping distance. Use tires of the recommended load capacity for your vehicle. Never overload them.

Tires — General Information

Tire Pressure

Proper tire inflation pressure is essential to the safe and satisfactory operation of your vehicle. Four primary areas are affected by improper tire pressure:

- Safety and Vehicle Stability
- Economy
- Tread Wear
- Ride Comfort

Safety

WARNING!

- **Improperly inflated tires are dangerous and can cause collisions.**
- **Underinflation increases tire flexing and can result in overheating and tire failure.**
- **Overinflation reduces a tire's ability to cushion shock. Objects on the road and chuckholes can cause damage that result in tire failure.**

(Continued)

WARNING! *(Continued)*

- **Overinflated or underinflated tires can affect vehicle handling and can fail suddenly, resulting in loss of vehicle control.**
- **Unequal tire pressures can cause steering problems. You could lose control of your vehicle.**
- **Unequal tire pressures from one side of the vehicle to the other can cause the vehicle to drift to the right or left.**
- **Always drive with each tire inflated to the recommended cold tire inflation pressure.**

Both under-inflation and over-inflation affect the stability of the vehicle and can produce a feeling of sluggish response or over responsiveness in the steering.

NOTE:

- Unequal tire pressures from side to side may cause erratic and unpredictable steering response.
- Unequal tire pressure from side to side may cause the vehicle to drift left or right.

Fuel Economy

Underinflated tires will increase tire rolling resistance resulting in higher fuel consumption.

Tread Wear

Improper cold tire inflation pressures can cause abnormal wear patterns and reduced tread life, resulting in the need for earlier tire replacement.

Ride Comfort And Vehicle Stability

Proper tire inflation contributes to a comfortable ride. Over-inflation produces a jarring and uncomfortable ride.

Tire Inflation Pressures

The proper cold tire inflation pressure is listed on the driver's side B-Pillar or rear edge of the driver's side door.

At least once a month:

- Check and adjust tire pressure with a good quality pocket-type pressure gauge. Do not make a visual judgement when determining proper inflation. Tires may look properly inflated even when they are under-inflated.
- Inspect tires for signs of tire wear or visible damage.

CAUTION!

After inspecting or adjusting the tire pressure, always reinstall the valve stem cap. This will prevent moisture and dirt from entering the valve stem, which could damage the valve stem.

Inflation pressures specified on the placard are always "cold tire inflation pressure". Cold tire inflation pressure is defined as the tire pressure after the vehicle has not been driven for at least three hours, or driven less than 1 mile (1.6 km) after sitting for a minimum of three hours. The cold tire inflation pressure must not exceed the maximum inflation pressure molded into the tire sidewall.

Check tire pressures more often if subject to a wide range of outdoor temperatures, as tire pressures vary with temperature changes.

Tire pressures change by approximately 1 psi (7 kPa) per 12°F (7°C) of air temperature change. Keep this in mind when checking tire pressure inside a garage, especially in the Winter.

Example: If garage temperature = 68°F (20°C) and the outside temperature = 32°F (0°C) then the cold tire inflation pressure should be increased by 3 psi (21 kPa), which equals 1 psi (7 kPa) for every 12°F (7°C) for this outside temperature condition.

Tire pressure may increase from 2 to 6 psi (13 to 40 kPa) during operation. DO NOT reduce this normal pressure build up or your tire pressure will be too low.

Tire Pressures For High Speed Operation

The manufacturer advocates driving at safe speeds and within posted speed limits. Where speed limits or conditions are such that the vehicle can be driven at high speeds, maintaining correct tire inflation pressure is very important. Increased tire pressure and reduced vehicle loading may be required for high-speed vehicle operation. Refer to an authorized tire dealer or original equipment vehicle dealer for recommended safe operating speeds, loading and cold tire inflation pressures.

WARNING!

High speed driving with your vehicle under maximum load is dangerous. The added strain on your tires could cause them to fail. You could have a serious collision. Do not drive a vehicle loaded to the maximum capacity at continuous speeds above 75 mph (120 km/h).

Radial Ply Tires

WARNING!

Combining radial ply tires with other types of tires on your vehicle will cause your vehicle to handle poorly. The instability could cause a collision. Always use radial ply tires in sets of four. Never combine them with other types of tires.

Tire Repair

If your tire becomes damaged, it may be repaired if it meets the following criteria:

- The tire has not been driven on when flat.
- The damage is only on the tread section of your tire (sidewall damage is not repairable).
- The puncture is no greater than a ¼ of an inch (6 mm).

Consult an authorized tire dealer for tire repairs and additional information.

Damaged Run Flat tires, or Run Flat tires that have experienced a loss of pressure should be replaced immediately with another Run Flat tire of identical size and service description (Load Index and Speed Symbol). Replace the tire pressure sensor as well as it is not designed to be reused.

Run Flat Tires — If Equipped

Run Flat tires allow you the capability to drive 50 miles (80 km) at 50 mph (80 km/h) after a rapid loss of inflation pressure. This rapid loss of inflation is referred to as the Run Flat mode. A Run Flat mode occurs when the tire inflation pressure is of/or below 14 psi (96 kPa). Once a Run Flat tire reaches the run flat mode it has limited driving capabilities and needs to be replaced immediately. A Run Flat tire is not repairable. When a run flat tire is changed after driving with underinflated tire condition, please replace the TPM sensor as it is not designed to be reused when driven under run flat mode (14 psi (96 kPa)) condition.

NOTE: TPM Sensor must be replaced after driving the vehicle on a flat tire condition.

It is not recommended driving a vehicle loaded at full capacity or to tow a trailer while a tire is in the run flat mode.

See the tire pressure monitoring section for more information.

Tire Spinning

When stuck in mud, sand, snow, or ice conditions, do not spin your vehicle's wheels above 30 mph (48 km/h) or for longer than 30 seconds continuously without stopping.

Refer to "Freeing A Stuck Vehicle" in "In Case Of Emergency" for further information.

WARNING!

Fast spinning tires can be dangerous. Forces generated by excessive wheel speeds may cause tire damage or failure. A tire could explode and injure someone. Do not spin your vehicle's wheels faster than 30 mph (48 km/h) for more than 30 seconds continuously when you are stuck, and do not let anyone near a spinning wheel, no matter what the speed.

Tread Wear Indicators

Tread wear indicators are in the original equipment tires to help you in determining when your tires should be replaced.

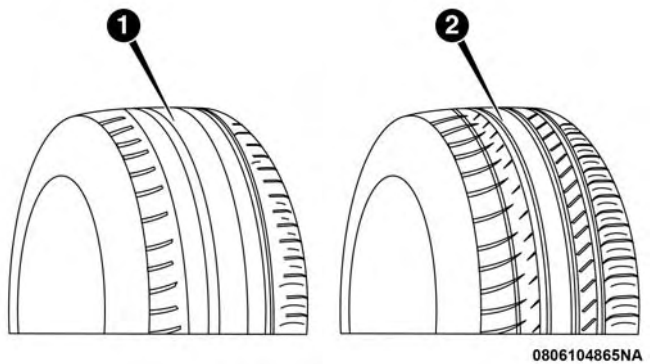

Tire Tread

1 — Worn Tire
2 — New Tire

These indicators are molded into the bottom of the tread grooves. They will appear as bands when the tread depth becomes a 1/16 of an inch (1.6 mm). When the tread is worn to the tread wear indicators, the tire should be replaced.

Refer to "Replacement Tires" in this section for further information.

Life Of Tire

The service life of a tire is dependent upon varying factors including, but not limited to:

- Driving style.
- Tire pressure - Improper cold tire inflation pressures can cause uneven wear patterns to develop across the tire tread. These abnormal wear patterns will reduce tread life, resulting in the need for earlier tire replacement.
- Distance driven.
- Performance tires, tires with a speed rating of V or higher, and Summer tires typically have a reduced tread life. Rotation of these tires per the vehicle scheduled maintenance is highly recommended.

WARNING!

Tires and the spare tire should be replaced after six years, regardless of the remaining tread. Failure to follow this warning can result in sudden tire failure. You could lose control and have a collision resulting in serious injury or death.

NOTE: Wheel Valve Stem must be replaced as well when installing new tires due to wear and tear in existing tires.

Keep dismounted tires in a cool, dry place with as little exposure to light as possible. Protect tires from contact with oil, grease, and gasoline.

Replacement Tires

The tires on your new vehicle provide a balance of many characteristics. They should be inspected regularly for wear and correct cold tire inflation pressures. The manufacturer strongly recommends that you use tires equivalent to the originals in size, quality and performance when replacement is needed. Refer to the paragraph on "Tread Wear Indicators" in this section. Refer to the Tire and Loading Information placard or the Vehicle Certification Label for the size designation of your tire. The Load Index and Speed Symbol for your tire will be found on the original equipment tire sidewall.

See the Tire Sizing Chart example found in the "Tire Safety Information" section of this manual for more information relating to the Load Index and Speed Symbol of a tire.

It is recommended to replace the two front tires or two rear tires as a pair. Replacing just one tire can seriously affect your vehicle's handling. If you ever replace a wheel, make sure that the wheel's specifications match those of the original wheels.

It is recommended you contact an authorized tire dealer or original equipment dealer with any questions you may have on tire specifications or capability. Failure to use equivalent replacement tires may adversely affect the safety, handling, and ride of your vehicle.

WARNING!

- **Do not use a tire, wheel size, load rating, or speed rating other than that specified for your vehicle. Some combinations of unapproved tires and wheels may change suspension dimensions and performance characteristics, resulting in changes to steering, handling, and braking of your vehicle. This can cause unpredictable handling and stress to steering and suspension components. You could lose control and have a collision resulting in serious injury or death. Use only the tire and wheel sizes with load ratings approved for your vehicle.**
- **Never use a tire with a smaller load index or capacity, other than what was originally equipped on your vehicle. Using a tire with a smaller load index could result in tire overloading and failure. You could lose control and have a collision.**

(Continued)

WARNING! *(Continued)*

- **Failure to equip your vehicle with tires having adequate speed capability can result in sudden tire failure and loss of vehicle control.**

CAUTION!

Replacing original tires with tires of a different size may result in false speedometer and odometer readings.

Tire Types

All Season Tires — If Equipped

All Season tires provide traction for all seasons (Spring, Summer, Fall, and Winter). Traction levels may vary between different all season tires. All season tires can be identified by the M+S, M&S, M/S or MS designation on the tire sidewall. Use all season tires only in sets of four; failure to do so may adversely affect the safety and handling of your vehicle.

Summer Or Three Season Tires — If Equipped

Summer tires provide traction in both wet and dry conditions, and are not intended to be driven in snow or on ice. If your vehicle is equipped with Summer tires, be aware these tires are not designed for Winter or cold driving conditions. Install Winter tires on your vehicle when ambient temperatures are less than 40°F (5°C) or if roads are covered with ice or snow. For more information, contact an authorized dealer.

Summer tires do not contain the all season designation or mountain/snowflake symbol on the tire sidewall. Use Summer tires only in sets of four; failure to do so may adversely affect the safety and handling of your vehicle.

WARNING!

Do not use Summer tires in snow/ice conditions. You could lose vehicle control, resulting in severe injury or death. Driving too fast for conditions also creates the possibility of loss of vehicle control.

Snow Tires

Some areas of the country require the use of snow tires during the Winter. Snow tires can be identified by a "mountain/snowflake" symbol on the tire sidewall.

If you need snow tires, select tires equivalent in size and type to the original equipment tires. Use snow tires only in sets of four; failure to do so may adversely affect the safety and handling of your vehicle.

Snow tires generally have lower speed ratings than what was originally equipped with your vehicle and should not be operated at sustained speeds over 75 mph (120 km/h). For speeds above 75 mph (120 km/h) refer to original equipment or an authorized tire dealer for recommended safe operating speeds, loading and cold tire inflation pressures.

While studded tires improve performance on ice, skid and traction capability on wet or dry surfaces may be poorer than that of non-studded tires. Some states prohibit studded tires; therefore, local laws should be checked before using these tire types.

Spare Tires — If Equipped

NOTE: For vehicles equipped with Tire Service Kit instead of a spare tire, please refer to "Tire Service Kit" in "In Case Of Emergency" for further information.

CAUTION!

Because of the reduced ground clearance, do not take your vehicle through an automatic car wash with a compact or limited use temporary spare installed. Damage to the vehicle may result.

Refer to the "Towing Requirements - Tires" in "Starting And Operating" for restrictions when towing with a spare tire designated for temporary emergency use.

Spare Tire Matching Original Equipped Tire And Wheel — If Equipped

Your vehicle may be equipped with a spare tire and wheel equivalent in look and function to the original equipment tire and wheel found on the front or rear axle of your vehicle. This spare tire may be used in the tire rotation for your vehicle. If your vehicle has this option, refer to an authorized tire dealer for the recommended tire rotation pattern.

Compact Spare Tire — If Equipped

The compact spare is for temporary emergency use only. You can identify if your vehicle is equipped with a compact spare by looking at the spare tire description on the Tire and Loading Information Placard located on the driver's side door opening or on the sidewall of the tire. Compact spare tire descriptions begin with the letter "T" or "S" preceding the size designation. Example: T145/80D18 103M.

T, S = Temporary Spare Tire

Since this tire has limited tread life, the original equipment tire should be repaired (or replaced) and reinstalled on your vehicle at the first opportunity.

Do not install a wheel cover or attempt to mount a conventional tire on the compact spare wheel, since the wheel is designed specifically for the compact spare tire. Do not install more than one compact spare tire and wheel on the vehicle at any given time.

WARNING!

Compact and collapsible spares are for temporary emergency use only. With these spares, do not drive more than 50 mph (80 km/h). Temporary use spares have limited tread life. When the tread is worn to the tread wear indicators, the temporary use spare tire needs to be replaced. Be sure to follow the warnings, which apply to your spare. Failure to do so could result in spare tire failure and loss of vehicle control.

Full Size Spare — If Equipped

The full size spare is for temporary emergency use only. This tire may look like the originally equipped tire on the front or rear axle of your vehicle, but it is not. This spare tire may have limited tread life. When the tread is worn to the tread wear indicators, the temporary use full size spare tire needs to be replaced. Since it is not the same as your original equipment tire, replace (or repair) the original equipment tire and reinstall on the vehicle at the first opportunity.

Limited Use Spare — If Equipped

The limited use spare tire is for temporary emergency use only. This tire is identified by a label located on the limited use spare wheel. This label contains the driving limitations for this spare. This tire may look like the original equipped tire on the front or rear axle of your vehicle, but it is not. Installation of this limited use spare tire affects vehicle handling. Since it is not the same as your original equipment tire, replace (or repair) the original equipment tire and reinstall on the vehicle at the first opportunity.

WARNING!

Limited use spares are for emergency use only. Installation of this limited use spare tire affects vehicle handling. With this tire, do not drive more than the speed listed on the limited use spare wheel. Keep inflated to the cold tire inflation pressures listed on your Tire and Loading Information Placard located on the driver's side B-Pillar or the rear edge of the driver's side door. Replace (or repair) the original equipment tire at the first opportunity and reinstall it on your vehicle. Failure to do so could result in loss of vehicle control.

Wheel And Wheel Trim Care

All wheels and wheel trim, especially aluminum and chrome plated wheels, should be cleaned regularly using mild (neutral Ph) soap and water to maintain their luster and to prevent corrosion. Wash wheels with the same soap solution recommended for the body of the vehicle and remember to always wash when the surfaces are not hot to the touch.

Your wheels are susceptible to deterioration caused by salt, sodium chloride, magnesium chloride, calcium chloride, etc., and other road chemicals used to melt ice or control dust on dirt roads. Use a soft cloth or sponge and mild soap to wipe away promptly. Do not use harsh chemicals or a stiff brush. They can damage the wheel's protective coating that helps keep them from corroding and tarnishing.

CAUTION!

Avoid products or automatic car washes that use acidic solutions or strong alkaline additives or harsh brushes. Many aftermarket wheel cleaners and automatic car washes may damage the wheel's protective finish. Such damage is not covered by the New Vehicle Limited Warranty. Only car wash soap, Mopar Wheel Cleaner or equivalent is recommended.

When cleaning extremely dirty wheels including excessive brake dust, care must be taken in the selection of tire and wheel cleaning chemicals and equipment to prevent damage to the wheels. Mopar Wheel Treatment or Mopar Chrome Cleaner or their equivalent is recommended or select a non-abrasive, non-acidic cleaner for aluminum or chrome wheels.

CAUTION!

Do not use scouring pads, steel wool, a bristle brush, metal polishes or oven cleaner. These products may damage the wheel's protective finish. Such damage is not covered by the New Vehicle Limited Warranty. Only car wash soap, Mopar Wheel Cleaner or equivalent is recommended.

NOTE: If you intend parking or storing your vehicle for an extended period after cleaning the wheels with wheel cleaner, drive your vehicle and apply the brakes to remove the water droplets from the brake components. This activity will remove the red rust on the brake rotors and prevent vehicle vibration when braking.

Dark Vapor Chrome, Black Satin Chrome, or Low Gloss Clear Coat Wheels

CAUTION!

If your vehicle is equipped with these specialty wheels, DO NOT USE wheel cleaners, abrasives, or polishing compounds. They will permanently damage this finish and such damage is not covered by the New Vehicle Limited Warranty. HAND WASH ONLY USING MILD SOAP AND WATER WITH A SOFT CLOTH. Used on a regular basis; this is all that is required to maintain this finish.

Tire Chains (Traction Devices)

Use of traction devices require sufficient tire-to-body clearance. Follow these recommendations to guard against damage.

- Traction device must be of proper size for the tire, as recommended by the traction device manufacturer.
- Install on front tires only.
- Due to limited clearance, the following traction devices are recommended:

All Models:

- The use of 7mm tire chains is permitted with the use of 215/65R16 tires only. Chain front tires ONLY. All other size tires are NOT chainable.
- No other tire sizes can be chained.

CAUTION!

- **Use on front tires ONLY.**
- **Damage may result if tire chains or traction devices are used with original equipment size tires.**

WARNING!

Using tires of different size and type (M+S, Snow) between front and rear axles can cause unpredictable handling. You could lose control and have a collision.

CAUTION!

To avoid damage to your vehicle or tires, observe the following precautions:

- **Because of restricted traction device clearance between tires and other suspension components, it is important that only traction devices in good condition are used. Broken devices can cause serious damage. Stop the vehicle immediately if noise occurs that could indicate device breakage. Remove the damaged parts of the device before further use.**
- **Install device as tightly as possible and then retighten after driving about ½ mile (0.8 km).**
- **Do not exceed 30 mph (48 km/h).**
- **Drive cautiously and avoid severe turns and large bumps, especially with a loaded vehicle.**
- **Do not drive for a prolonged period on dry pavement.**
- **Observe the traction device manufacturer's instructions on the method of installation, operating speed, and conditions for use. Always use the suggested operating speed of the device manufacturer's if it is less than 30 mph (48 km/h).**
- **Do not use traction devices on a compact spare tire.**

Tire Rotation Recommendations

The tires on the front and rear of your vehicle operate at different loads and perform different steering, handling, and braking functions. For these reasons, they wear at unequal rates.

These effects can be reduced by timely rotation of tires. The benefits of rotation are especially worthwhile with aggressive tread designs such as those on On/Off Road type tires. Rotation will increase tread life, help to maintain mud, snow, and wet traction levels, and contribute to a smooth, quiet ride.

Refer to the "Maintenance Plan" in this section for the proper maintenance intervals. The reasons for any rapid or unusual wear should be corrected prior to rotation being performed.

The suggested Front Wheel Drive (FWD) rotation method is the "forward cross" shown in the following diagram. This rotation pattern does not apply to some directional tires that must not be reversed.

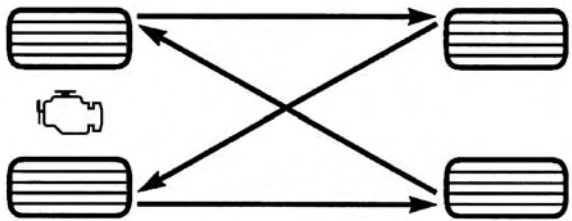

Front Wheel Drive (FWD) Tire Rotation

The suggested Four Wheel Drive (4WD) Tire rotation method is the "rearward cross" shown in the following diagram.

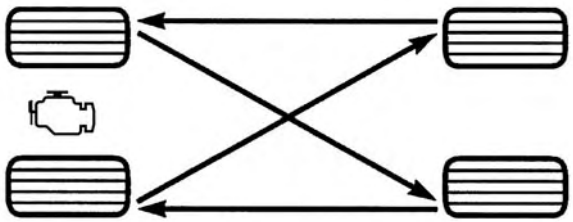

Four Wheel Drive (4WD) Tire Rotation

CAUTION!

Proper operation of four-wheel drive vehicles depends on tires of equal size, type and circumference on each wheel. Any difference in tire size can cause damage to the power transfer unit. Tire rotation schedule should be followed to balance tire wear.

DEPARTMENT OF TRANSPORTATION UNIFORM TIRE QUALITY GRADES

The following tire grading categories were established by the National Highway Traffic Safety Administration. The specific grade rating assigned by the tire's manufacturer in each category is shown on the sidewall of the tires on your vehicle.

All passenger vehicle tires must conform to Federal safety requirements in addition to these grades.

Treadwear

The Treadwear grade is a comparative rating, based on the wear rate of the tire when tested under controlled conditions on a specified government test course. For example, a tire graded 150 would wear one and one-half times as well on the government course as a tire graded 100. The relative performance of tires depends upon the actual conditions of their use, however, and may depart significantly from the norm due to variations in driving habits, service practices, and differences in road characteristics and climate.

Traction Grades

The Traction grades, from highest to lowest, are AA, A, B, and C. These grades represent the tire's ability to stop on wet pavement, as measured under controlled conditions on specified government test surfaces of asphalt and concrete. A tire marked C may have poor traction performance.

WARNING!

The traction grade assigned to this tire is based on straight-ahead braking traction tests, and does not include acceleration, cornering, hydroplaning, or peak traction characteristics.

Temperature Grades

The Temperature grades are A (the highest), B, and C, representing the tire's resistance to the generation of heat and its ability to dissipate heat, when tested under controlled conditions on a specified indoor laboratory test wheel.

Sustained high temperature can cause the material of the tire to degenerate and reduce tire life, and excessive temperature can lead to sudden tire failure. The grade C corresponds to a level of performance, which all passenger vehicle tires must meet under the Federal Motor Vehicle Safety Standard No. 109. Grades B and A represent higher levels of performance on the laboratory test wheel, than the minimum required by law.

WARNING!

The temperature grade for this tire is established for a tire that is properly inflated and not overloaded. Excessive speed, under-inflation, or excessive loading, either separately or in combination, can cause heat buildup and possible tire failure.

STORING THE VEHICLE

If the vehicle should remain stationary for more than a month, observe the following precautions:

- Park your vehicle in a covered, dry and possibly airy location the windows open slightly.
- Check that the Electric Park Brake is not engaged.
- Disconnect the negative (-) terminal from the battery post and be sure that the battery is fully charged. During storage check battery charge quarterly.

- If you do not disconnect the battery from the electrical system, check the battery charge every thirty days.
- Clean and protect the painted parts by applying protective waxes.
- Clean and protect polished metal parts by applying protective waxes.
- Apply talcum powder to the front and rear wiper blades and leave raised from the glass.
- Cover the vehicle with an appropriate cover taking care not to damage the painted surface by dragging across dirty surfaces. Do not use plastic sheeting which will not allow the evaporation of moisture present on the surface of the vehicle.
- Inflate the tires at a pressure of +7.25 psi (+50 kPa) higher than recommended on the tire placard and check it periodically.
- Do not drain the engine cooling system.
- Whenever you leave the vehicle is stationary for two weeks or more, idle the engine for approximately five minutes with the air conditioning system on and high fan speed. This will ensure a proper lubrication of the system, thus minimizing the possibility of damage to the compressor when the vehicle is put back into operation.

NOTE: When the vehicle has not been started or driven for at least 30 days, an Extended Park Start Procedure is required to start the vehicle. Refer to "Starting The Engine" in "Starting And Operating" for further information.

CAUTION!

Before removal of the positive and negative terminals to the battery, wait at least a minute with ignition switch in the OFF position and close the drivers door. When reconnecting the positive and negative terminals to the battery be sure the ignition switch is in the OFF position and the drivers door is closed.

BODYWORK

Protection From Atmospheric Agents

Vehicle body care requirements vary according to geographic locations and usage. Chemicals that make roads passable in snow and ice and those that are sprayed on trees and road surfaces during other seasons are highly corrosive to the metal in your vehicle. Outside parking, which exposes your vehicle to airborne contaminants, road surfaces on which the vehicle is operated, extreme hot or cold weather and other extreme conditions will have an adverse effect on paint, metal trim, and underbody protection.

The following maintenance recommendations will enable you to obtain maximum benefit from the corrosion resistance built into your vehicle.

What Causes Corrosion?

Corrosion is the result of deterioration or removal of paint and protective coatings from your vehicle.

The most common causes are:

- Road salt, dirt and moisture accumulation.
- Stone and gravel impact.
- Insects, tree sap and tar.
- Salt in the air near seacoast localities.
- Atmospheric fallout/industrial pollutants.

Body And Underbody Maintenance

Cleaning Headlights

Your vehicle is equipped with plastic headlights and fog lights that are lighter and less susceptible to stone breakage than glass headlights.

Plastic is not as scratch resistant as glass and therefore different lens cleaning procedures must be followed.

To minimize the possibility of scratching the lenses and reducing light output, avoid wiping with a dry cloth. To remove road dirt, wash with a mild soap solution followed by rinsing.

Do not use abrasive cleaning components, solvents, steel wool or other aggressive material to clean the lenses.

Preserving The Bodywork

Washing

- Wash your vehicle regularly. Always wash your vehicle in the shade using Mopar Car Wash, or a mild car wash soap, and rinse the panels completely with clear water.
- If insects, tar, or other similar deposits have accumulated on your vehicle, use Mopar Super Kleen Bug and Tar Remover to remove.
- Use a high quality cleaner wax, such as Mopar Cleaner Wax to remove road film, stains and to protect your paint finish. Take care never to scratch the paint.
- Avoid using abrasive compounds and power buffing that may diminish the gloss or thin out the paint finish.

CAUTION!

- **Do not use abrasive or strong cleaning materials such as steel wool or scouring powder that will scratch metal and painted surfaces.**
- **Use of power washers exceeding 1,200 psi (8,274 kPa) can result in damage or removal of paint and decals.**

Special Care

- If you drive on salted or dusty roads or if you drive near the ocean, hose off the undercarriage at least once a month.
- It is important that the drain holes in the lower edges of the doors, rocker panels, and trunk be kept clear and open.
- If you detect any stone chips or scratches in the paint, touch them up immediately. The cost of such repairs is considered the responsibility of the owner.
- If your vehicle is damaged due to a collision or similar cause that destroys the paint and protective coating, have your vehicle repaired as soon as possible. The cost of such repairs is considered the responsibility of the owner.
- If you carry special cargo such as chemicals, fertilizers, de-icer salt, etc., be sure that such materials are well packaged and sealed.
- If a lot of driving is done on gravel roads, consider mud or stone shields behind each wheel.
- Use Mopar Touch Up Paint on scratches as soon as possible. An authorized dealer has touch up paint to match the color of your vehicle.

INTERIORS

Seats And Fabric Parts

Use Mopar Total Clean to clean fabric upholstery and carpeting.

WARNING!

Do not use volatile solvents for cleaning purposes. Many are potentially flammable, and if used in closed areas they may cause respiratory harm.

Seat Belt Maintenance

Do not bleach, dye or clean the belts with chemical solvents or abrasive cleaners. This will weaken the fabric. Sun damage can also weaken the fabric.

If the belts need cleaning, use a mild soap solution or lukewarm water. Do not remove the belts from the vehicle to wash them. Dry with a soft cloth.

Replace the belts if they appear frayed or worn or if the buckles do not work properly.

WARNING!

A frayed or torn belt could rip apart in a collision and leave you with no protection. Inspect the belt system periodically, checking for cuts, frays, or loose parts. Damaged parts must be replaced immediately. Do not disassemble or modify the system. Seat belt assemblies must be replaced after a collision if they have been damaged (i.e., bent retractor, torn webbing, etc.).

Plastic And Coated Parts

Use Mopar Total Clean to clean vinyl upholstery.

CAUTION!

- **Direct contact of air fresheners, insect repellents, suntan lotions, or hand sanitizers to the plastic, painted, or decorated surfaces of the interior may cause permanent damage. Wipe away immediately.**
- **Damage caused by these type of products may not be covered by your New Vehicle Limited Warranty.**

Cleaning Plastic Instrument Cluster Lenses

The lenses in front of the instruments in this vehicle are molded in clear plastic. When cleaning the lenses, care must be taken to avoid scratching the plastic.

1. Clean with a wet soft cloth. A mild soap solution may be used, but do not use high alcohol content or abrasive cleaners. If soap is used, wipe clean with a clean damp cloth.
2. Dry with a soft cloth.

Leather Parts

Mopar Total Clean is specifically recommended for leather upholstery.

Your leather upholstery can be best preserved by regular cleaning with a damp soft cloth. Small particles of dirt can act as an abrasive and damage the leather upholstery and should be removed promptly with a damp cloth. Stubborn soils can be removed easily with a soft cloth and Mopar Total Clean. Care should be taken to avoid soaking your leather upholstery with any liquid. Please do not use polishes, oils, cleaning fluids, solvents, detergents, or ammonia-based cleaners to clean your leather upholstery. Application of a leather conditioner is not required to maintain the original condition.

NOTE: If equipped with light colored leather, it tends to show any foreign material, dirt, and fabric dye transfer more so than darker colors. The leather is designed for easy cleaning, and FCA recommends Mopar total care leather cleaner applied on a cloth to clean the leather seats as needed.

CAUTION!

Do not use Alcohol and Alcohol-based and/or Ketone based cleaning products to clean leather upholstery, as damage to the upholstery may result.

Glass Surfaces

All glass surfaces should be cleaned on a regular basis with Mopar Glass Cleaner, or any commercial household-type glass cleaner. Never use an abrasive type cleaner. Use caution when cleaning the inside rear window equipped with electric defrosters or windows equipped with radio antennas. Do not use scrapers or other sharp instruments that may scratch the elements.

When cleaning the rear view mirror, spray cleaner on the towel or cloth that you are using. Do not spray cleaner directly on the mirror.

TECHNICAL SPECIFICATIONS

CONTENTS

■ VEHICLE IDENTIFICATION 490
- □ Chassis Number. 490

■ BRAKE SYSTEM 490

■ WHEEL AND TIRE TORQUE SPECIFICATIONS . .491
- □ Torque Specifications 491

■ FUEL REQUIREMENTS 492
- □ 1.3L Turbo Engine 492
- □ 2.4L Engine 493
- □ Reformulated Gasoline 493
- □ Gasoline/Oxygenate Blends 493
- □ E-85 Usage In Non-Flex Fuel Vehicles. 494
- □ CNG And LP Fuel System Modifications 494
- □ MMT In Gasoline. 494
- □ Materials Added To Fuel 495
- □ Fuel System Cautions 495
- □ Carbon Monoxide Warnings 496

■ FLUID CAPACITIES 497

■ FLUIDS AND LUBRICANTS 498
- □ Engine 498
- □ Chassis 499

VEHICLE IDENTIFICATION

Chassis Number

The chassis number (VIN) is stamped on a plate located on the left front corner of the instrument panel cover, which is visible from outside the car through the windshield.

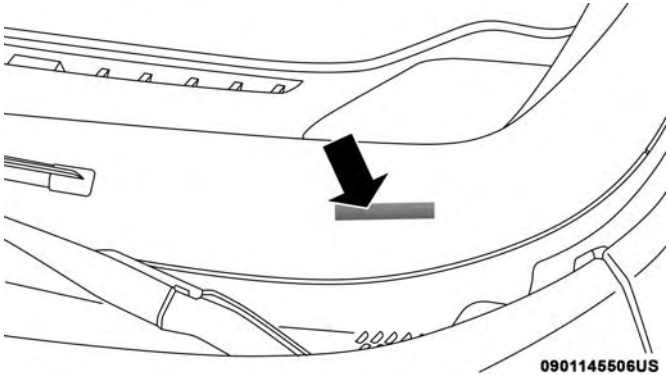

Vehicle Identification Number (VIN)

This number is also stamped on the floor of the passenger compartment, near the right front seat.

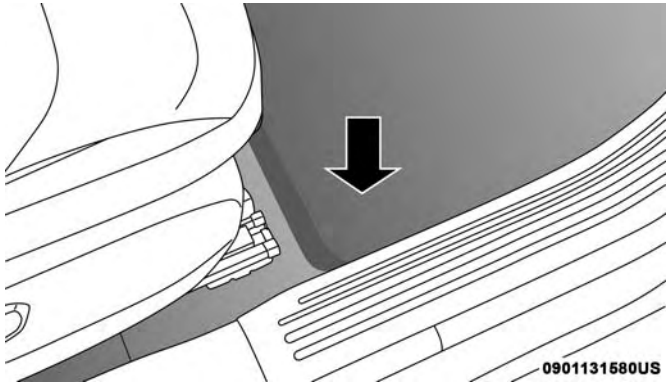

Vehicle Identification Number (VIN)

NOTE: It is illegal to remove or alter the VIN.

BRAKE SYSTEM

Your vehicle is equipped with dual hydraulic brake systems. If either of the two hydraulic systems loses normal capability, the remaining system will still function. However, there will be some loss of overall braking effectiveness. You may notice increased pedal travel during application, greater pedal force required to slow or stop, and potential activation of the Brake Warning Light.

In the event power assist is lost for any reason (i.e., repeated brake applications with the engine OFF) the brakes will still function. However, the effort required to brake the vehicle will be much greater than that required with the power system operating.

WHEEL AND TIRE TORQUE SPECIFICATIONS

Proper lug nut/bolt torque is very important to ensure that the wheel is properly mounted to the vehicle. Any time a wheel has been removed and reinstalled on the vehicle, the lug nuts/bolts should be torqued using a properly calibrated torque wrench using a high quality six sided (hex) deep wall socket.

Torque Specifications

Wheel Bolt Torque	**Wheel Bolt Size	Wheel Bolt Socket Size
89 Ft-Lbs (120 N·m)	M12 x 1.25	17 mm

**Use only an authorized dealer recommended lug nuts/bolts and clean or remove any dirt or oil before tightening.

Inspect the wheel mounting surface prior to mounting the tire and remove any corrosion or loose particles.

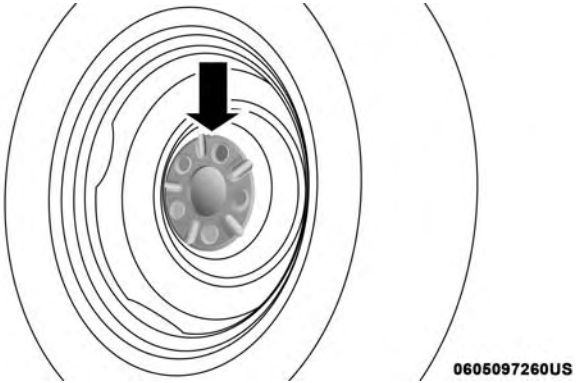

Wheel Mounting Surface

Tighten the wheel bolts in a star pattern until each bolt has been tightened twice. Ensure that the socket is fully engaged on the lug nut/bolt.

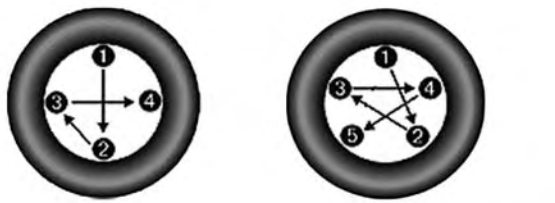

0605006372

Torque Patterns

After 25 miles (40 km), check the wheel bolt torque to be sure that all the lug nuts/bolts are properly seated against the wheel.

WARNING!

To avoid the risk of forcing the vehicle off the jack, do not fully tighten the wheel bolts until the vehicle has been lowered. Failure to follow this warning may result in serious injury.

FUEL REQUIREMENTS

1.3L Turbo Engine

This engine is designed to meet all emissions requirements, and provide satisfactory fuel economy and performance, when using high-quality unleaded "regular" gasoline having an octane rating of 87, as specified by the (R+M)/2 method.

The use of a 91 or higher octane "premium" gasoline will allow these engines to operate to optimal performance. This increase in performance is most noticeable in hot weather or other heavier load conditions, such as while towing.

While operating on gasoline with the required octane number, hearing a light knocking sound from the engine is not a cause for concern. However, if the engine is heard making a heavy knocking sound, see your dealer immediately. Use of gasoline with a lower than recommended octane number can cause engine failure and may void or not be covered by the New Vehicle Limited Warranty.

Poor quality gasoline can cause problems such as hard starting, stalling, and hesitations. If you experience these symptoms, try another brand of gasoline before considering service for the vehicle.

2.4L Engine

All available gasoline engines are designed to meet all emissions regulations and provide excellent fuel economy and performance when using high quality unleaded "regular" gasoline having a octane rating of 87 using the (R+M)/2 method. The use of premium gasoline is not recommended, as it will not provide any benefit over regular gasoline in these engines.

While operating on gasoline with an octane number of 87, hearing a light knocking sound from the engine is not a cause for concern. However, if the engine is heard making a heavy knocking sound, see your dealer immediately. Use of gasoline with an octane number lower than 87 can cause engine failure and may void or not be covered by the New Vehicle Limited Warranty.

Poor quality gasoline can cause problems such as hard starting, stalling, and hesitations. If you experience these symptoms, try another brand of gasoline before considering service for the vehicle.

Reformulated Gasoline

Many areas of the country require the use of cleaner burning gasoline referred to as "Reformulated Gasoline". Reformulated gasoline contains oxygenates and are specifically blended to reduce vehicle emissions and improve air quality.

The use of reformulated gasoline is recommended. Properly blended reformulated gasoline will provide improved performance and durability of engine and fuel system components.

Gasoline/Oxygenate Blends

Some fuel suppliers blend unleaded gasoline with oxygenates such as ethanol.

CAUTION!

DO NOT use E-85, gasoline containing methanol, or gasoline containing more than 15% ethanol (E-15). Use of these blends may result in starting and drivability problems, damage critical fuel system components, cause emissions to exceed the applicable standard, and/or cause the Malfunction Indicator Light to illuminate. Please observe pump labels as they should clearly communicate if a fuel contains greater than 15% ethanol (E-15).

Problems that result from using gasoline containing more than 15% ethanol (E-15) or gasoline containing methanol are not the responsibility of the manufacturer and may void or not be covered under New Vehicle Limited Warranty.

E-85 Usage In Non-Flex Fuel Vehicles

Non-Flex Fuel Vehicles (FFV) are compatible with gasoline containing up to 15% ethanol (E-15). Gasoline with higher ethanol content may void the New Vehicle Limited Warranty.

If a Non-FFV vehicle is inadvertently fueled with E-85 fuel, the engine will have some or all of these symptoms:

- Operate in a lean mode.
- OBD II “Malfunction Indicator Light” on.
- Poor engine performance.
- Poor cold start and cold drivability.
- Increased risk for fuel system component corrosion.

CNG And LP Fuel System Modifications

Modifications that allow the engine to run on compressed natural gas (CNG) or liquid propane (LP) may result in damage to the engine, emissions, and fuel system components. Problems that result from running CNG or LP are not the responsibility of the manufacturer and may void or not be covered under the New Vehicle Limited Warranty.

MMT In Gasoline

Methylcyclopentadienyl Manganese Tricarbonyl (MMT) is a manganese-containing metallic additive that is blended into some gasoline to increase octane. Gasoline blended with MMT provides no performance advantage beyond gasoline of the same octane number without MMT. Gasoline blended with MMT reduces spark plug life and reduces emissions system performance in some vehicles. The manufacturer recommends that gasoline without MMT be used in your vehicle. The MMT content of gasoline may not be indicated on the gasoline pump, therefore, you should ask your gasoline retailer whether the gasoline contains MMT. MMT is prohibited in Federal and California reformulated gasoline.

Materials Added To Fuel

Besides using unleaded gasoline with the proper octane rating, gasolines that contain detergents, corrosion, and stability additives are recommended. Using gasolines that have these additives will help improve fuel economy, reduce emissions, and maintain vehicle performance.

Designated TOP TIER Detergent Gasoline contains a higher level of detergents to further aide in minimizing engine and fuel system deposits. When available, the usage of Top Tier Detergent gasoline is recommended. Visit www.toptiergas.com for a list of TOP TIER Detergent Gasoline Retailers.

Indiscriminate use of fuel system cleaning agents should be avoided. Many of these materials intended for gum and varnish removal may contain active solvents or similar ingredients. These can harm fuel system gasket and diaphragm materials.

Fuel System Cautions

CAUTION!

Follow these guidelines to maintain your vehicle's performance:

- **The use of leaded gasoline is prohibited by Federal law. Using leaded gasoline can impair engine performance and damage the emissions control system.**
- **An out-of-tune engine or certain fuel or ignition malfunctions can cause the catalytic converter to overheat. If you notice a pungent burning odor or some light smoke, your engine may be out of tune or malfunctioning and may require immediate service. Contact an authorized dealer for service assistance.**
- **The use of fuel additives, which are now being sold as octane enhancers, is not recommended. Most of these products contain high concentrations of methanol. Fuel system damage or vehicle performance problems resulting from the use of such fuels or additives is not the responsibility of the manufacturer and may void or not be covered under the New Vehicle Limited Warranty.**

NOTE: Intentional tampering with the emissions control system can result in civil penalties being assessed against you.

Carbon Monoxide Warnings

WARNING!

Carbon monoxide (CO) in exhaust gases is deadly. Follow the precautions below to prevent carbon monoxide poisoning:

(Continued)

WARNING! ***(Continued)***

- **Do not inhale exhaust gases. They contain carbon monoxide, a colorless and odorless gas, which can kill. Never run the engine in a closed area, such as a garage, and never sit in a parked vehicle with the engine running for an extended period. If the vehicle is stopped in an open area with the engine running for more than a short period, adjust the ventilation system to force fresh, outside air into the vehicle.**
- **Guard against carbon monoxide with proper maintenance. Have the exhaust system inspected every time the vehicle is raised. Have any abnormal conditions repaired promptly. Until repaired, drive with all side windows fully open.**

FLUID CAPACITIES

	U.S	Metric
Fuel (Approximate)		
1.3L Turbo / 2.4L Engine	12.7 Gallons	48 Liters
Engine Oil With Filter		
1.3L Turbo Engine (SAE 0W-30 SN PLUS Synthetic, API Certified)	4.5 Quarts	4.3 Liters
2.4L Engine (SAE 0W-20, API Certified)	5.5 Quarts	5.2 Liters
Cooling System *		
1.3L Turbo Engine (Mopar Antifreeze/Engine Coolant 10 Year/ 150,000 Mile Formula)	8.8 Quarts	8.3 Liters
2.4L Engine (Mopar Antifreeze/Engine Coolant 10 Year/ 150,000 Mile Formula)	6.8 Quarts	6.5 Quarts
* Includes heater and coolant recovery bottle filled to MAX level.		

FLUIDS AND LUBRICANTS

Engine

Component	Fluid, Lubricant, or Genuine Part
Engine Coolant	We recommend you use Mopar Antifreeze/Coolant 10 Year/150,000 Mile Formula OAT (Organic Additive Technology) or equivalent meeting the requirements of FCA Material Standard MS.90032.
Engine Oil – 1.3L Turbo Engine	We recommend you use SAE 0W-30 SN PLUS API Certified Synthetic Engine Oil, meeting the requirements of FCA Material Standard MS-13340 such as Mopar, Pennzoil, and Shell Helix. Refer to your engine oil filler cap for correct SAE grade.
Engine Oil – 2.4L Engine	We recommend you use SAE 0W-20 API Certified Engine Oil, meeting the requirements of FCA Material Standard MS-6395 such as Mopar, Pennzoil, and Shell Helix. Refer to your engine oil filler cap for correct SAE grade.
Engine Oil Filter	We recommend you use a Mopar Engine Oil Filter.
Spark Plugs	We recommend you use Mopar Spark Plugs.
Fuel Selection – 1.3L Turbo Engine	87 Octane (R+M)/2, 0-15% Ethanol.
Fuel Selection – 2.4L Engine	87 Octane, 0-15% Ethanol
Fuel Selection – 2.4L Flex Fuel (E-85) Engines	87 Octane, Up To 85% Ethanol.

Chassis

Component	Fluid, Lubricant, or Genuine Part
Manual Transmission – If Equipped	We recommend you use Mopar C Series Manual & Dual Dry Clutch Transmission Fluid.
Automatic Transmission – If Equipped	Use only Mopar ZF 8&9 Speed ATF Automatic Transmission Fluid, or equivalent. Failure to use the correct fluid may affect the function or performance of your transmission.
Power Transfer Unit (PTU) – If Equipped	We recommended you use Mopar Front Axle/PTU Synthetic Axle Lubricant SAE 75W-90 (API GL-5).
Rear Differential (RDM) – If Equipped	We recommended you use Mopar Rear Axle/RDM Synthetic Axle Lubricant SAE 75W-90 (API GL-5).
Brake Master Cylinder	We recommend you use Mopar DOT 4. If DOT 4 brake fluid is not available, then DOT 3 is acceptable. DOT 4 brake fluid must be changed every 2 years regardless of mileage.

MULTIMEDIA

CONTENTS

- UCONNECT SYSTEMS 503
- DRAG & DROP MENU BAR 503
- CYBERSECURITY 504
- UCONNECT SETTINGS 505
  - Customer Programmable Features — Uconnect 3 and 4 Settings 506
  - Customer Programmable Features — Uconnect 4C/4C NAV With 8.4-inch Display Settings 524
- STEERING WHEEL AUDIO CONTROLS 545
  - Radio Operation. 545
  - Media Mode 545
- USB/MEDIA PLAYER CONTROL — IF EQUIPPED 546
- RADIO OPERATION AND MOBILE PHONES . . .547
  - Regulatory And Safety Information 547
- UCONNECT VOICE RECOGNITION QUICK TIPS 548
  - Introducing Uconnect 548
  - Get Started 550
  - Basic Voice Commands 551
  - Radio 551
  - Media 553
  - Phone 555
  - Voice Text Reply — If Equipped 557
  - Climate 558
  - Navigation (4C NAV) — If Equipped 560
  - SiriusXM Guardian (4C/4C NAV) — If Equipped 561
  - Register (4C/4C NAV) 561

- Vehicle Health Report/Alert (4C/4C NAV) 562
- Mobile App (4C/4C NAV) 562
- SiriusXM Travel Link (4C NAV). 563
- Siri Eyes Free — If Equipped 563
- Using Do Not Disturb 564
- Android Auto — If Equipped 565
- Apple CarPlay — If Equipped. 567
- General Information 568
- Additional Information. 569

UCONNECT SYSTEMS

For detailed information about your Uconnect system, refer to your Uconnect Owner's Manual Supplement.

NOTE: Uconnect screen images are for illustration purposes only and may not reflect exact software for your vehicle.

DRAG & DROP MENU BAR

The Uconnect features and services in the main menu bar are easily changed for your convenience. Simply follow these steps:

Uconnect 4 Apps Menu

Uconnect 4C/4C NAV Apps Menu

1. Press the "Apps ⓤ" button to open the App screen.
2. Press and hold, then drag the selected App to replace an existing shortcut in the main menu bar.

The new shortcut will now be an active App/shortcut on the main menu bar.

CYBERSECURITY

Your vehicle may be a connected vehicle and may be equipped with both wired and wireless networks. These networks allow your vehicle to send and receive information. This information allows systems and features in your vehicle to function properly.

Your vehicle may be equipped with certain security features to reduce the risk of unauthorized and unlawful access to vehicle systems and wireless communications. Vehicle software technology continues to evolve over time and FCA US LLC, working with its suppliers, evaluates and takes appropriate steps as needed. Similar to a computer or other devices, your vehicle may require software updates to improve the usability and performance of your systems or to reduce the potential risk of unauthorized and unlawful access to your vehicle systems.

The risk of unauthorized and unlawful access to your vehicle systems may still exist, even if the most recent version of vehicle software (such as Uconnect software) is installed.

WARNING!

- **It is not possible to know or to predict all of the possible outcomes if your vehicle's systems are breached. It may be possible that vehicle systems, including safety related systems, could be impaired or a loss of vehicle control could occur that may result in an accident involving serious injury or death.**
- **ONLY insert media (e.g., USB, SD card, or CD) into your vehicle if it came from a trusted source. Media of unknown origin could possibly contain malicious software, and if installed in your vehicle, it may increase the possibility for vehicle systems to be breached.**
- **As always, if you experience unusual vehicle behavior, take your vehicle to your nearest authorized dealer immediately.**

NOTE:

- FCA US LLC or your dealer may contact you directly regarding software updates.
- To help further improve vehicle security and minimize the potential risk of a security breach, vehicle owners should:
  - Routinely check www.driveuconnect.com (U.S. Residents) or www.driveuconnect.ca (Canadian Residents) to learn about available Uconnect software updates.
  - Only connect and use trusted media devices (e.g. personal mobile phones, USBs, CDs).

Privacy of any wireless and wired communications cannot be assured. Third parties may unlawfully intercept information and private communications without your consent. For further information, refer to "Data Collection & Privacy" in your Uconnect Owner's Manual Supplement or "Onboard Diagnostic System (OBD II) Cybersecurity" in "Getting To Know Your Instrument Panel".

UCONNECT SETTINGS

The Uconnect system uses a combination of buttons on the touchscreen and buttons on the faceplate located on the center of the instrument panel that allow you to access and change the customer programmable features. Many features can vary by vehicle.

Buttons on the touchscreen are accessible on the Uconnect touchscreen.

Buttons on the faceplate are located below, and beside the Uconnect system in the center of the instrument panel. In addition, there is a Scroll/Enter control knob located on the right side. Turn the control knob to scroll through menus and change settings (i.e., 30, 60, 90), push the center of the control knob one or more times to select or change a setting (i.e., ON, OFF).

Your Uconnect system may also have Screen Off and Mute buttons on the faceplate.

Push the Screen Off button on the faceplate to turn off the Uconnect screen. Push the Screen Off button on the faceplate a second time to turn the screen on.

Push the Back Arrow button on the faceplate to exit out of a Menu or certain option on the Uconnect system.

Customer Programmable Features — Uconnect 3 and 4 Settings

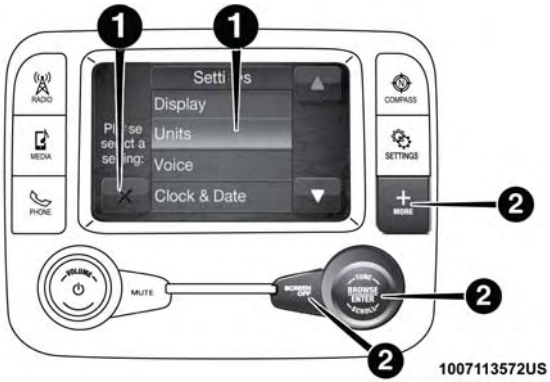

Uconnect 3 With 5–inch Display Buttons On The Touchscreen And Buttons On The Faceplate

1 — Uconnect Buttons On The Touchscreen
2 — Uconnect Buttons On The Faceplate

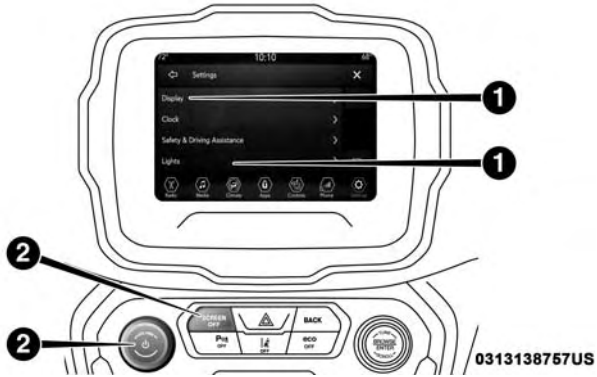

Uconnect 4 With 7–inch Display Buttons On The Touchscreen And Buttons On The Faceplate

1 — Uconnect Buttons On The Touchscreen
2 — Uconnect Buttons On The Faceplate

Push the "Settings" button on the touchscreen to display the settings menu screen. In this mode the Uconnect system allows you to access all of the available programmable features.

NOTE: Only one touchscreen area may be selected at a time.

When making a selection, press the button on the touchscreen to enter the desired mode. Once in the desired mode, press and release the preferred setting and make your selection. Once the setting is complete, either press the back arrow/Done button on the touchscreen or the Back button on the faceplate to return to the previous menu. Pressing the Up or Down Arrow buttons on the right side of the screen will allow you to toggle up or down through the available settings.

NOTE: All settings should be changed with the ignition in the "ON/RUN" position.

The following tables list the settings that may be found within the Uconnect 3 or Uconnect 4 system, along with the selectable options pertaining to each setting.

Language

After pressing the "Language" button on the touchscreen, the following settings will be available:

Setting Name	Selectable Options		
Language	English	Espanol	Francais

Display

After pressing the “Display” button on the touchscreen, the following settings will be available:

Setting Name	Selectable Options	
Display Mode	Auto	Manual
Display Brightness With Headlights ON	+	-
NOTE: To make changes to the ″Display Brightness with Headlights ON″ setting, the headlights must be on and the interior dimmer switch must not be in the ″party″ or ″parade″ positions.		
Display Brightness With Headlights OFF	+	-
NOTE: To make changes to the ″Display Brightness with Headlights OFF″ setting, the headlights must be off and the interior dimmer switch must not be in the ″party″ or ″parade″ positions.		
Touchscreen Beep	On	Off
Display Trip B	On	Off

Units

After pressing the "Units" button on the touchscreen, the following settings will be available:

Setting Name	Selectable Options		
Units	US	Metric	Custom
NOTE: When US is selected, Distance is set on miles, Fuel Consumption is set on MPG (US), Pressure is set on psi, and Temperature is set on °F. When Metric is selected, Distance is set on km, Fuel Consumption is set on L/100 km, Pressure is set on bar, and Temperature is set on °C.			

After pressing the "Custom" button with "Units" on the touchscreen, you may select from the following menu items:

Setting Name	Selectable Options		
Distance — If Equipped	mi	km	
Fuel Consumption — If Equipped	MPG (US)		MPG (UK)
Pressure — If Equipped	psi	kPa	bar
Temperature — If Equipped	°C		°F

Voice — If Equipped

After pressing the "Voice" button on the touchscreen the following settings will be available:

Setting Name	Selectable Options		
Voice Response Length	Brief	Detailed	
Show Command List	Always	With Help	Never

Clock & Date

After pressing the "Clock & Date" button on the touchscreen, the following settings will be available:

Setting Name	Selectable Options	
Set Time And Format	12 hour	24 hour
	AM	PM
NOTE: Within the "Set Time and Format" setting, press the corresponding arrow buttons on the touchscreen to adjust to the correct time.		
Show Time Status	On	Off
Set Date (MM/DD/YY)	-	+
NOTE: This feature allows you to set the date, month, and year using the plus and minus buttons.		
Sync Date— If Equipped	On	Off
Sync Time — If Equipped	On	Off

Safety/Assistance

After pressing the "Safety/Assistance" button on the touchscreen, the following settings will be available:

Setting Name	Selectable Options	
ParkView Backup Camera Delay	On	Off
NOTE: The "ParkView Backup Camera Delay" setting determines whether or not the screen will display the rear view image with dynamic grid lines for up to ten seconds after the vehicle is shifted out of REVERSE. This delay will be canceled if the vehicle's speed exceeds 8 mph (13 km/h), the transmission is shifted into PARK, or the ignition is switched to the OFF position.		
ParkView Backup Camera Active Guide Lines	On	Off
NOTE: The "ParkView Backup Camera Active Guide Lines" setting overlays the Rear Backup Camera image with active, or dynamic, grid lines to help illustrate the width of the vehicle and its project back up path, based on the steering wheel position when the option is checked. A dashed center line overlay indicates the center of the vehicle to assist with parking or aligning to a hitch/receiver.		

Setting Name	Selectable Options		
Forward Collision Warning — If Equipped	Off	Only Warning	Warning + Active Warning
NOTE: Changing the FCW status to “Off” prevents the system from warning you of a possible collision with the vehicle in front of you. The FCW system state is kept in memory from one ignition cycle to the next. If the system is turned OFF, it will remain off when the vehicle is restarted. Forward Collision Warning includes Advanced Brake Assist (ABA). The ABA applies additional brake pressure when the driver requests insufficient brake pressure to avoid a potential frontal collision. When the “Sound Only” option is selected a chime sounds alerting you of a possible collision with the vehicle in front of you and more brake pressure is needed. When the “Sound and Brake” option is selected, it applies the brakes to slow your vehicle in case of potential forward collision and sound an audible chime to alert you.			
Forward Collision Warning Sensitivity — If Equipped	Near	Med	Far
NOTE: The “Forward Collision Warning Plus (FCW+) Sensitivity” setting determines at what relative distance the vehicle directly in front of you needs to be at, before the system warns you of a possible collision with the vehicle directly in front of you, based on the option is selected. “Far” gives you the most amount of reaction time, whereas “Near” gives you the least amount of reaction time, based on the distance between the two vehicles.			

Setting Name	Selectable Options		
ParkSense — If Equipped	Off	Sound Only	Sound and Display
Front ParkSense Volume — If Equipped	Low	Med	High
Rear ParkSense Volume — If Equipped	Low	Med	High
LaneSense Warning — If Equipped	Early	Med	Late
NOTE: The "LaneSense Warning" setting determines at what distance the LaneSense system warns you, through steering wheel feedback, of a possible lane departure.			
LaneSense Strength — If Equipped	Low	Med	High
Blind Spot Alert — If Equipped	Off	Lights	Lights and Chime
NOTE: If your vehicle has experienced any damage in the area where the sensor is located, even if the fascia is not damaged, the sensor may have become misaligned. Take your vehicle to an authorized dealer to verify sensor alignment. A sensor that is misaligned will result in the Blind Spot Monitor (BSM) not operating to specification.			
Side Distance Warning	Off	Sound Only	Sound and Display
Side Distance Warning Volume	Low	Med	High
Rain Sensing Auto Wipers — If Equipped	On	Off	

Brakes — If Equipped

After pressing the "Brakes" button on the touchscreen the following setting will be available:

Setting Name	Selectable Options	
Brake Service	Yes	No
Auto Park Brake	On	Off

Lights

After pressing the "Lights" button on the touchscreen the following settings will be available:

Setting Name	Selectable Options		
Interior Ambient Lighting — If Equipped	+	-	
Headlight Sensitivity — If Equipped	Level 1	Level 2	Level 3

NOTE:
- When this feature is selected, it allows the Headlight Sensitivity to be adjusted according to three levels.
- The greater the sensitivity set, the less the external light variation required to turn on the lights (e.g. with a setting on level 3 at sunset the headlights turn on earlier than in levels 1 and 2). To change the Headlight Sensitivity setting, press the "1," "2" or "3" button on the touchscreen to select your desired Headlight Sensitivity level.

Setting Name	Selectable Options			
Headlight Off Delays — If Equipped	0 sec	30 sec	60 sec	90 sec
Greeting Lights — If Equipped	On		Off	
Automatic High Beam Headlamps — If Equipped	On		Off	
Daytime Running Lights — If Equipped	On		Off	
NOTE: When this feature is selected, the headlights will turn on while the engine is running.				
Cornering Lights — If Equipped	On		Off	
NOTE: When this feature is selected, if the steering wheel rotation angle is large or the turn signal indicators are on, a light (incorporated in the fog light) will turn on, on the relevant side to improve visibility at night.				
Flash Lights With Lock — If Equipped	On		Off	
NOTE: When this feature is selected, the exterior lights will flash when the doors are locked or unlocked with the key fob. This feature may be selected with or without the Sound Horn on Lock feature selected.				

Doors & Locks

After pressing the "Doors & Locks" button on the touch-screen the following settings will be available:

Setting Name	Selectable Options		
Auto Door Locks — If Equipped	On		Off
NOTE: When this feature is selected, all doors will lock automatically when the vehicle reaches a speed of 12 mph (20 km/h).			
Auto Unlock On Exit — If Equipped	On		Off
NOTE: When this feature is selected, all doors will unlock when the vehicle is stopped and the transmission is in the PARK or NEUTRAL position and the driver's door is opened.			
Horn With Lock — If Equipped	Off	1st Press	2nd Press
Horn With Remote Start — If Equipped	On		Off
Passive Entry — If Equipped	On		Off
NOTE: This feature allows you to lock and unlock the vehicle's door(s) without having to push the key fob lock or unlock buttons.			

Setting Name	Selectable Options	
Remote Door Unlock— If Equipped	Driver	All

NOTE:
- When "Driver" is selected, only the driver's door will unlock on the first push of the key fob unlock button, you must push the key fob unlock button twice to unlock the passenger's doors. When "All" is selected, all of the doors will unlock on the first push of the key fob unlock button.
- If "All" is programmed, all doors will unlock no matter which Passive Entry equipped door handle is grasped. If "Driver" is programmed, only the driver's door will unlock when the driver's door is grasped. Touching the handle more than once will only result in the driver's door opening once. If the driver door is opened, the interior door lock/unlock switch can be used to unlock all doors (or use key fob).

Auto-On Comfort — If Equipped

After pressing the "Auto-On Comfort" button on the touchscreen, the following settings will be available:

Setting Name	Selectable Options		
Auto-On Driver Heated Seat & Steering Wheel With Vehicle Start — If Equipped	Off	Remote Start	All Starts

NOTE:
When this feature is selected, the driver's heated seat and heated steering wheel will automatically turn on when temperatures are below 40° F (4.4° C).

Engine Off Options

After pressing the "Engine Off Options" button on the touchscreen, the following settings will be available:

Setting Name	Selectable Options	
Headlight Off Delay — If Equipped	+	–
NOTE: When this feature is selected, the driver can choose to have the headlights remain on for 0, 30, 60, or 90 seconds when exiting the vehicle.		
Radio Off Delay — If Equipped	+	–

Compass Settings — If Equipped

After pressing the "Compass Settings" button on the touchscreen, the following settings will be available:

NOTE: Before compass calibration is performed, the compass variance zone should be set for best results.

Setting Name	Selectable Options														
Compass Variance	1	2	3	4	5	6	7	8	9	10	11	12	13	14	15
When the "Compass Variance" feature is selected, it allows the compass variance to be set to any number from 1 to 15 per the compass variance zone map figure. Compass Variance is the difference between Magnetic North and Geographic North. To compensate for the differences, the variance should be set for the zone where the vehicle is being driven, illustrated in the zone map. Once properly set, the compass will automatically compensate for the differences when calibrated, and provide the most accurate compass headings.															

Compass Variance Zone Map

Compass Calibration	Start

NOTE:
Press "Compass Calibration" on the touchscreen to enter calibration. To start calibration of the compass, press the "Yes" button on the touchscreen and complete one or more 360-degree turns (in an area free from large metal or metallic objects). A message will appear on the touchscreen when the compass has been successfully calibrated.
Keep magnetic materials away from the rear view mirror, such as Mobile Phones, Laptops and Radar Detectors. This is where the compass module is located, and it can cause interference with the compass sensor, and it may give false readings.

Audio

After pressing the "Audio" button on the touchscreen the following settings will be available:

Setting Name	Selectable Options			
Equalizer	+		–	
NOTE: Bass/Mid/Treble allow you to simply slide your finger up or down to change the setting as well as press directly on the desired setting.				
Balance/Fade	When in this display you may adjust the Balance and Fade settings.			
Speed Adjusted Volume	Off	1	2	3
Surround Sound — If Equipped	On		Off	
Loudness — If Equipped	On		Off	
Auto-On Radio — If Equipped	On		Off	Recall Last
NOTE: The Radio automatically turns on when vehicle is in run or will recall whether it was on or off at last ignition off.				
Radio Off With Door	On		Off	
AUX Volume Offset	On		Off	
AutoPlay — If Equipped	On		Off	
NOTE: When activated, the "AutoPlay" setting automatically starts playing music off of a connected device as soon as it is connected.				

Phone/Bluetooth

After pressing the "Phone/Bluetooth" button on the touch-screen, the following settings will be available:

Setting Name	Selectable Options	
Paired Phones and Devices	List of Paired Phones	
NOTE: This feature shows which phones are paired to the Phone/Bluetooth system. For further information, refer to the Uconnect Owner's Manual Supplement.		
Phone Pop-ups Displayed In Cluster	On	Off

SiriusXM Setup — If Equipped

After pressing the "SiriusXM Setup" button on the touchscreen, the following settings will be available:

Setting Name	Selectable Options	
SXM Tune Start	On	Off
NOTE: The "Tune Start" feature begins playing the current song from the beginning when you tune to a music channel using one of the twelve presets, so you can enjoy the complete song. This feature occurs the first time the preset is selected during that current song. Tune Start works in the background, so you will not even realize it's on, except that you will miss the experience of joining your favorite song with only a few seconds left to play.		
Channel Skip	Channel Skip	
NOTE: SiriusXM can be programmed to designate a group of channels that are the most desirable to listen to or to exclude undesirable channels while scanning. To make your selection, press the "Channel Skip" button on the touchscreen, select the channels you would like to skip.		
Subscription Information	Subscription Info	
NOTE: New vehicle purchasers or lessees will receive a free limited time subscription to SiriusXM Satellite Radio with your radio. Following the expiration of the free services, it will be necessary to access the information on the Subscription Information screen to re-subscribe. 1. Press the "Subscription Info" button on the touchscreen to access the Subscription Information screen. 2. Write down the SIRIUS ID numbers for your receiver. To reactivate your service, either call the number listed on the screen or visit the provider online.		

Restore Settings

After pressing the "Restore Settings" button on the touch-screen, the following settings will be available:

Setting Name	Selectable Options	
Restore Settings to Default	Yes	No
NOTE: When this feature is selected, it will reset all settings to their default settings. To restore the settings to their default setting, press the "Restore Settings" button on the touchscreen. A pop-up will appear asking "Are you sure you want to reset your settings to default?"		

Clear Personal Data

After pressing the "Clear Personal Data" button on the touchscreen, the following settings will be available:

Setting Name	Selectable Options	
Clear Personal Data	OK	Cancel
NOTE: When the "Clear Personal Data" feature is selected it will remove all personal data including Bluetooth devices and presets.		

Customer Programmable Features — Uconnect 4C/4C NAV With 8.4-inch Display Settings

Uconnect 4C/4C NAV With 8.4–inch Display Buttons On The Touchscreen And Buttons On The Faceplate

1 — Uconnect Buttons On The Touchscreen
2 — Uconnect Buttons On The Faceplate

Press the Settings button to display the menu setting screen. In this mode the Uconnect system allows you to access programmable features that may be equipped such as Language, Display, Clock, Safety & Driving Assistance, Lights, Doors & Locks, Engine Off Options, Audio, Phone/Bluetooth, SiriusXM Setup, Restore Settings Defaults, Clear Personal Data and System Information.

NOTE: Depending on the vehicles options, feature settings may vary.

When making a selection, press the button on the touchscreen to enter the desired mode. Once in the desired mode, press and release the preferred setting and make your selection. Once the setting is complete, either press the Back Arrow button on the touchscreen to return to the previous menu, or press the “X” button on the touchscreen to close out of the settings screen. Pressing the Up or Down Arrow button on the right side of the screen will allow you to toggle up or down through the available settings.

Language

After pressing the “Language” button on the touchscreen, the following settings will be available:

Setting Name	Selectable Options		
Language	English	Espanol	Francais

NOTE:
When the “Set Language” feature is selected, you may select one of multiple languages (English / Français / Español) for all display nomenclature, including the trip functions and the navigation system (if equipped). Press the “Set Language” button on the touchscreen, then press the desired language button on the touchscreen until a check-mark appears next to the language, showing that setting has been selected.

Display

After pressing the “Display” button on the touchscreen, the following settings will be available:

Setting Name	Selectable Options	
Display Mode	Auto	Manual
Display Brightness With Headlights ON	+	-
NOTE: To make changes to the ″Display Brightness with Headlights ON″ setting, the headlights must be on and the interior dimmer switch must not be in the ″party″ or ″parade″ positions.		
Display Brightness With Headlights OFF	+	-
NOTE: To make changes to the ″Display Brightness with Headlights OFF″ setting, the headlights must be off and the interior dimmer switch must not be in the ″party″ or ″parade″ positions.		
Set Theme	List of Themes	
NOTE: When the “Set Theme” feature is selected, you may select the theme for the display screen. To make your selection, press the ″Set Theme″ button on the touchscreen, then select the desired theme option button until a check-mark appears showing that the setting has been selected.		

Setting Name	Selectable Options	
Units	US	Metric
Touchscreen Beep	On	Off
Control Screen Time-Out — If Equipped	On	Off
NOTE: When the "Control Screen Time-Out" feature is selected, the Controls Screen will stay open for five seconds before the screen times out. With the feature deselected, the screen will stay open until it is manually closed.		
Fuel Saver Display in Cluster	On	Off
Navigation Next Turn Pop-ups Displayed in Cluster	On	Off
NOTE: When the "Navigation Turn-By-Turn In Cluster" feature is selected, the turn-by-turn directions will appear in the instrument cluster display as the vehicle approaches a designated turn within a programmed route.		
Phone Pop-ups Displayed in Cluster	On	Off

Units

After pressing the "Units" button on the touchscreen, you may select each unit of measure independently displayed in the instrument cluster display. The following selectable units of measure are listed below:

Setting Name	Selectable Options		
Units	US	Metric	Custom
NOTE: When US is selected, Distance is set on miles, Fuel Consumption is set on MPG (US), Pressure is set on psi, and Temperature is set on °F. When Metric is selected, Distance is set on km, Fuel Consumption is set on L/100 km, Pressure is set on bar, and Temperature is set on °C.			

After pressing the “Custom” button with “Units” on the touchscreen, you may select from the following menu items:

Setting Name	Selectable Options		
Speed	MPH		km/h
Distance	mi	km	
Fuel Consumption	MPG (US)		MPG (UK)
Pressure	psi	kPa	bar
Temperature	°C		°F

Voice

After pressing the “Voice” button on the touchscreen, the following settings will be available:

Setting Name	Selectable Options		
Voice Response Length	Brief	Detailed	
Show Command List	Always	With Help	Never

Clock

After pressing the "Clock" button on the touchscreen, the following settings will be available:

Setting Name	Selectable Options	
Sync Time With GPS — If Equipped	On	Off
Set Time Hours	+	-
NOTE: The "Set Time Hours" feature will allow you to adjust the hours. The "Sync time with GPS" button on the touch-screen must be unchecked.		
Set Time Minutes	+	-
NOTE: The "Set Time Minutes" feature will allow you to adjust the minutes. The "Sync time with GPS" button on the touch-screen must be unchecked.		
Time Format	12hrs	24hrs
	AM	FM
Show Time in Status Bar — If Equipped	On	Off
Set Date (MM/DD/YY)	+	-

Camera

After pressing the "Camera" button on the touchscreen, the following settings will be available:

Setting Name	Selectable Options	
ParkView Backup Camera Delay	On	Off
NOTE: The "ParkView Backup Camera Delay" setting determines whether or not the screen will display the rear view image with dynamic grid lines for up to ten seconds after the vehicle is shifted out of REVERSE. This delay will be canceled if the vehicle's speed exceeds 8 mph (13 km/h), the transmission is shifted into PARK, or the ignition is switched to the OFF position.		
Active ParkView Backup Camera Guide Lines	On	Off
NOTE: The "Active ParkView Backup Camera Guide Lines" feature overlays the Rear Backup Camera image with active, or dynamic, grid lines to help illustrate the width of the vehicle and its project back up path, based on the steering wheel position when the option is checked. A dashed center line overlay indicates the center of the vehicle to assist with parking or aligning to a hitch/receiver.		

Safety & Driving Assistance

After pressing the "Safety & Driving Assistance" button on the touchscreen the following settings will be available:

Setting Name	Selectable Options		
Forward Collision Warning — If Equipped	Off	Only Warning	Warning + Active Braking
NOTE: Changing the FCW status to "Off" prevents the system from warning you of a possible collision with the vehicle in front of you. The FCW system state is kept in memory from one ignition cycle to the next. If the system is turned OFF, it will remain off when the vehicle is restarted. Forward Collision Warning includes Advanced Brake Assist (ABA). The ABA applies additional brake pressure when the driver requests insufficient brake pressure to avoid a potential frontal collision. When the "Sound Only" option is selected a chime sounds alerting you of a possible collision with the vehicle in front of you and more brake pressure is needed. When the "Sound and Brake" option is selected, it applies the brakes to slow your vehicle in case of potential forward collision and sound an audible chime to alert you.			
Forward Collision Warning Sensitivity — If Equipped	Near	Med	Far
NOTE: The "Forward Collision Warning Plus (FCW+) Sensitivity" setting determines at what relative distance the vehicle directly in front of you needs to be at, before the system warns you of a possible collision with the vehicle directly in front of you, based on the option is selected. "Far" gives you the most amount of reaction time, whereas "Near" gives you the least amount of reaction time, based on the distance between the two vehicles.			

Setting Name	Selectable Options		
LaneSense Warning — If Equipped	Early	Med	Late
NOTE: The "LaneSense Warning" setting determines at what distance the LaneSense system warns you, through steering wheel feedback, of a possible lane departure.			
LaneSense Strength — If Equipped	Low	Med	High
ParkSense — If Equipped	Sound Only	Sound and Display	
Front ParkSense Volume	Low	Medium	High
Rear ParkSense Volume	Low	Medium	High
Blind Spot Alert — If Equipped	Off	Lights	Lights + Chime
NOTE: When the "Blind Spot Alert" feature is selected, the Blind Spot Monitoring (BSM) system is activated and will show a visual alert in the outside mirrors, or it will show a visual alert in the outside mirrors as well as play an audible alert when the turn signal is on. When "Off" is selected, the Blind Spot Monitoring (BSM) system is deactivated. If your vehicle has experienced any damage in the area where the sensor is located, even if the fascia is not damaged, the sensor may have become misaligned. Take your vehicle to an authorized dealer to verify sensor alignment. A sensor that is misaligned will result in the BSM not operating to specification.			
Side Distance Warning	Off	Sound Only	Sound and Display
Side Distance Warning Volume	Low	Med	High

Mirror and Wipers

After pressing the "Mirror and Wipers" button on the touchscreen, the following settings will be available:

Setting Name	Selectable Options	
Rain Sensing Auto Wipers	On	Off

Brakes — If Equipped

After pressing the "Brakes" button on the touchscreen, the following settings will be available:

Setting Name	Selectable Options	
Auto Park Brake	On	Off
Brake Service	Yes	No

NOTE:
Selecting the "Brake Service" feature will display a pop-up asking whether or you would like to retract the park brakes to all break system service.

Lights

After pressing the "Lights" button on the touchscreen the following settings will be available:

Setting Name	Selectable Options			
Interior Ambient Lighting	+		-	
Headlight Off Delay	0	30	60	90
Headlight Illumination on Approach	0	30	60	90
Headlights with Wipers	On		Off	
Greeting Lights — If Equipped	On		Off	
Auto High Beams — If Equipped	On		Off	
Daytime Running Lights — If Equipped	Yes		No	
Steering Directed Lights — If Equipped	On		Off	
Headlight Dip — If Equipped	On		Off	
Flash Lights With Lock — If Equipped	On		Off	
Flash Lights With Sliding Door — If Equipped	On		Off	

Doors & Locks

After pressing the "Doors & Locks" button on the touch-screen the following settings will be available:

Setting Name	Selectable Options		
Auto Door Lock	Yes		No
NOTE: When this feature is selected, all doors will lock automatically when the vehicle reaches a speed of 15 mph (24 km/h).			
Auto Unlock On Exit	Yes		No
Flash Lights With Lock — If Equipped	Yes		No
Sound Horn With Lock — If Equipped	Off	1st Press	2nd Press
Sound Horn With Remote Start — If Equipped	Yes		No
1st Press of Key Fob Unlocks	Driver Door		All Doors
Passive Entry — If Equipped	Yes		No
NOTE: This feature allows you to lock and unlock the vehicles door(s) without having to press the key fob lock or unlock buttons.			

Auto-On Comfort Systems — If Equipped

After pressing the "Auto-On Comfort & Remote Start" button on the touchscreen, the following settings will be available:

Setting Name	Selectable Options		
Auto-On Driver Heated Seat & Steering Wheel With Vehicle Start — If Equipped	Off	Remote Start	All Starts
NOTE: When this feature is selected the driver's heated seat and heated steering wheel will automatically turn ON when temperatures are below 40° F (4.4° C).			

Engine Off Options

After pressing the "Engine Off Options" button on the touchscreen, the following settings will be available:

Setting Name	Selectable Options	
Headlight Off Delay — If Equipped	+	–
NOTE: When this feature is selected, the driver can choose to have the headlights remain on for 0, 30, 60, or 90 seconds when exiting the vehicle.		
Auto Entry/Exit Suspension	On	Off
Radio Off Delay	0 MIN	20 MIN
Radio Off With Door — If Equipped	On	Off

Audio

After pressing the "Audio" button on the touchscreen, the following settings will be available:

Setting Name	Selectable Options
Balance/Fade	Speaker Icon
NOTE: When in this display you may adjust the "Balance/Fade" of the audio by pressing and dragging the "Speaker Icon" toward any location in the box.	

Setting Name	Selectable Options			
Equalizer	Bass	Mid	Treble	
NOTE: When in this display you may adjust the “Bass”, “Mid” and “Treble” settings. Adjust the settings with the “+” and “–” setting buttons on the touchscreen or by selecting any point on the scale between the “+” and “–” buttons on the touchscreen. Bass/Mid/Treble also allow you to simply slide your finger up or down to change the setting as well as press directly on the desired setting.				
Speed Adjusted Volume	Off	1	2	3
Surround Sound — If Equipped	On		Off	
AUX Volume Offset — If Equipped	+		-	
NOTE: This feature provides the ability to tune the audio level for portable devices connected through the AUX input.				
AutoPlay	On		Off	
NOTE: The “AutoPlay” setting, when activated, automatically starts playing music off of a connect device as soon as it is connected.				
Radio Off With Door	On		Off	

Phone/Bluetooth

After pressing the "Phone/Bluetooth" button on the touch-screen, the following settings will be available:

Setting Name	Selectable Options		
Phone Pop-ups Displayed in Cluster	On	Off	
Do Not Disturb	List of Settings		
NOTE: The "Do Not Disturb" feature allows the paired phone to send a predetermined call, text, or both, to any incoming call, or text, before sending it directly to voicemail. It also keeps a counter of all missed calls and texts while on the road.			
Auto Reply	Text	Call	Both
Auto Reply Message	Default	Custom	
Customize Auto Reply Message	Customize Message		
Paired Phones And Audio Sources	List Of Paired Phones And Audio Sources		
NOTE: The "Paired Phones And Audio Sources" feature shows which phones or media devices are paired to the Phone/Bluetooth system. For further information, refer to the Uconnect Owner's Manual Supplement.			

Setting Name	Selectable Options	
Smartphone Projection Manager	List Of Connected Phones	
NOTE: Pressing “Smartphone Projection Manager” feature allows you to see a list of all connected phones and gives you the option to determine which phone will be used for projection (Apple CarPlay or Android Auto).		
Smartphone Device Mirroring	On	Off
Enable Android Auto	On	Off
Autoshow Display Upon Connection	On	Off

SiriusXM Setup — If Equipped

After pressing the "SiriusXM Setup" button on the touch-screen, the following settings will be available:

Setting Name	Selectable Options	
SXM Tune Start	On	Off
NOTE: The "Tune Start" feature begins playing the current song from the beginning when you tune to a music channel using one of the twelve presets, so you can enjoy the complete song. This feature occurs the first time the preset is selected during that current song. Tune Start works in the background, so you will not even realize it's on, except that you will miss the experience of joining your favorite song with only a few seconds left to play.		
Channel Skip	Channel Skip	
NOTE: SiriusXM can be programmed to designate a group of channels that are the most desirable to listen to or to exclude undesirable channels while scanning. To make your selection, press the "Channel Skip" button on the touch-screen, select the channels you would like to skip.		

Setting Name	Selectable Options
Subscription Information	Subscription Info

NOTE:
New vehicle purchasers or lessees will receive a free limited time subscription to SiriusXM Satellite Radio with your radio. Following the expiration of the free services, it will be necessary to access the information on the Subscription Information screen to re-subscribe.

1. Press the "Subscription Info" button on the touchscreen to access the Subscription Information screen.
2. Write down the SIRIUS ID numbers for your receiver. To reactivate your service, either call the number listed on the screen or visit the provider online.

NOTE: SiriusXM Travel Link is a separate subscription.

Reset

After pressing the “Reset” button on the touchscreen, the following settings will be available:

Setting Name	Selectable Options	
Reset App Drawer to Default Order	OK	Cancel
Restore Settings to Default	OK	Cancel
NOTE: When the “Restore Settings” feature is selected it will reset all settings to their default settings.		
Clear Personal Data	OK	Cancel
NOTE: When the “Clear Personal Data” feature is selected it will remove all personal data including Bluetooth devices and presets.		
Modem Reset	Yes	Cancel

STEERING WHEEL AUDIO CONTROLS

The remote sound system controls are located at the rear of the steering wheel. Reach behind the wheel to access the switches.

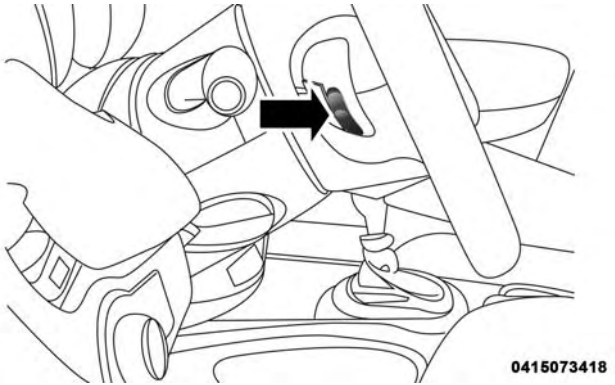

Audio Controls (Back View Of Steering Wheel)

The right-hand control is a rocker-type switch with a pushbutton in the center and controls the volume and mode of the sound system. Pushing the top of the rocker switch increases the volume, and pushing the bottom of the rocker switch decreases the volume.

Pushing the center button changes the source (AM, FM, SXM, Bluetooth, etc.)

The left-hand control is a rocker-type switch with a push-button in the center. The function of the left-hand control is different depending on which mode you are in.

The following describes the left-hand control operation in each mode.

Radio Operation

Pushing the top of the switch will “Seek” up for the next listenable station and pushing the bottom of the switch will “Seek” down for the next listenable station.

The button located in the center of the left-hand control will tune to the next preset station that you have programmed in the radio preset button.

Media Mode

Pushing the top of the switch once will go to the next track on the selected media (AUX/USB/Bluetooth). Pushing the bottom of the switch once will go to the beginning of the current track, or to the beginning of the previous track if it is within eight seconds after the current track begins to play.

If you push the switch up or down twice, it plays the second track; three times, it will play the third, etc.

USB/MEDIA PLAYER CONTROL — IF EQUIPPED

This feature allows an external device to be plugged into the USB port or AUX Jack.

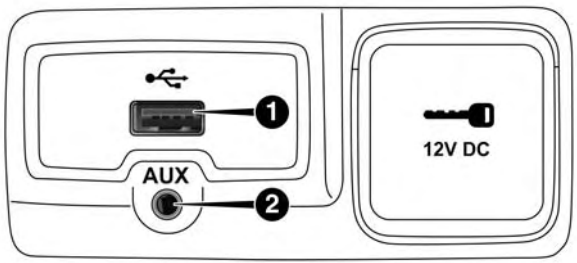

1004130611US

Front USB Port And AUX Jack

1 — USB Port
2 — AUX Jack

Located below the heating ventilation and air conditioning controls is the front USB port and AUX jack.

Refer to the Uconnect Owner's Manual Supplement for external USB support capability.

Rear Center Console USB Port

Located on the rear of the center console is a second USB port.

NOTE: Depending on vehicle configuration, the USB port may be charge only, or media file capable.

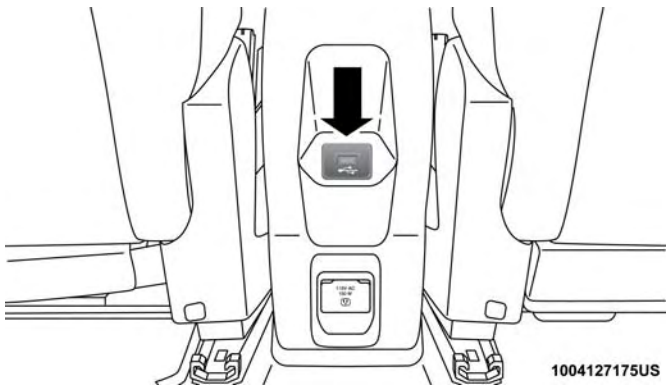

1004127175US

Rear Center Console USB (Charge Only) Port — If Equipped

RADIO OPERATION AND MOBILE PHONES

Under certain conditions, the mobile phone being on in your vehicle can cause erratic or noisy performance from your radio. This condition may be lessened or eliminated by relocating the mobile phone antenna. This condition is not harmful to the radio. If your radio performance does not satisfactorily "clear" by the repositioning of the antenna, it is recommended that the radio volume be turned down or off during mobile phone operation when not using Uconnect (if equipped).

Regulatory And Safety Information

USA/CANADA

Exposure to Radio Frequency Radiation

The radiated output power of the internal wireless radio is far below the FCC and IC radio frequency exposure limits. Nevertheless, the wireless radio will be used in such a manner that the radio is 8 in (20 cm) or further from the human body.

The internal wireless radio operates within guidelines found in radio frequency safety standards and recommendations, which reflect the consensus of the scientific community.

The radio manufacturer believes the internal wireless radio is safe for use by consumers. The level of energy emitted is far less than the electromagnetic energy emitted by wireless devices such as mobile phones. However, the use of wireless radios may be restricted in some situations or environments, such as aboard airplanes. If you are unsure of restrictions, you are encouraged to ask for authorization before turning on the wireless radio.

The following regulatory statement applies to all Radio Frequency (RF) devices equipped in this vehicle:

This device complies with Part 15 of the FCC Rules and with Industry Canada license-exempt RSS standard(s). Operation is subject to the following two conditions:

1. This device may not cause harmful interference, and
2. This device must accept any interference received, including interference that may cause undesired operation.

NOTE: Changes or modifications not expressly approved by the party responsible for compliance could void the user's authority to operate the equipment.

NOTE:

- This equipment has been tested and found to comply with the limits for a Class B digital device, pursuant to Part 15 of the FCC Rules. These limits are designed to provide reasonable protection against harmful interference in a residential installation. This equipment generates, uses and can radiate radio frequency energy and, if not installed and used in accordance with the instructions, may cause harmful interference to radio communications. However, there is no guarantee that interference will not occur in a particular installation.
- If this equipment does cause harmful interference to radio or television reception, which can be determined by turning the equipment off and on, the user is encouraged to try to correct the interference by one or more of the following measures:
  1. Increase the separation between the equipment and receiver.
  2. Consult an authorized dealer or an experienced radio technician for help.

UCONNECT VOICE RECOGNITION QUICK TIPS

Introducing Uconnect

Start using Uconnect Voice Recognition with these helpful quick tips. It provides the key Voice Commands and tips you need to know to control your Uconnect 3, Uconnect 4, or Uconnect 4C/4C NAV system.

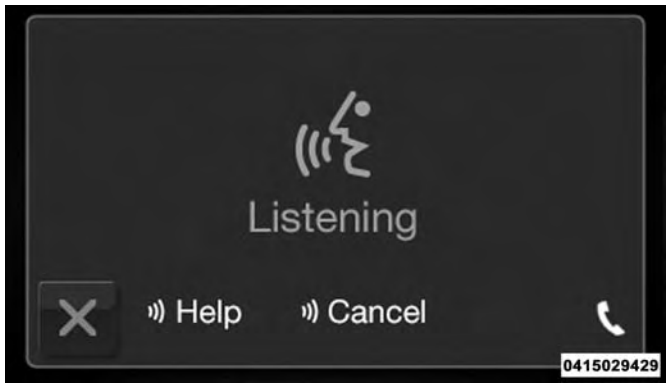

Uconnect 3

Uconnect 4

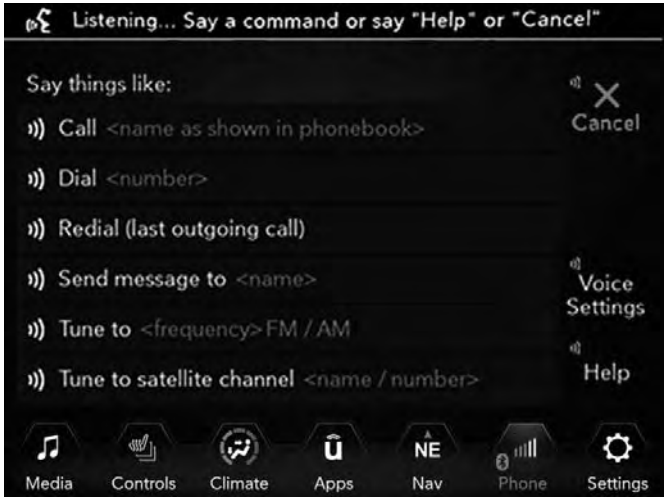

Uconnect 4C/4C NAV

If you see the NAV icon on the bottom bar or in the Apps menus of your 8.4-inch touchscreen, you have the Uconnect 4C NAV system. If not, you have a Uconnect 4C with 8.4-inch display system.

Get Started

All you need to control your Uconnect system with your voice are the buttons on your steering wheel.

Helpful hints for using Voice Recognition:

- Visit UconnectPhone.com to check mobile device and feature compatibility and to find phone pairing instructions.
- Reduce background noise. Wind and passenger conversations are examples of noise that may impact recognition.
- Speak clearly at a normal pace and volume while facing straight ahead. The microphone is positioned on the rearview mirror and aimed at the driver.
- Each time you give a Voice Command, you must first push either the Voice Recognition (VR) or Phone button, wait until **after** the beep, then say your Voice Command.
- You can interrupt the help message or system prompts by pushing the VR or Phone button and saying a Voice Command from the current category.

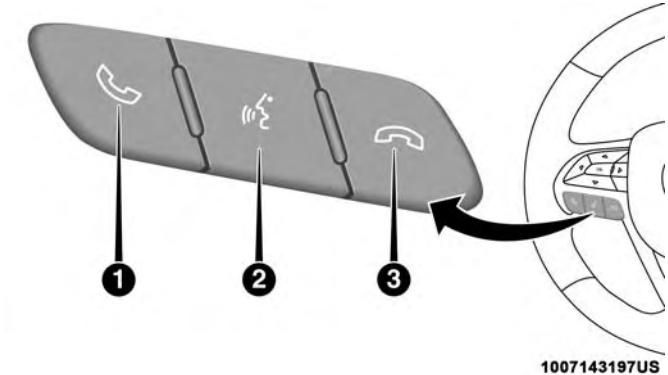

Uconnect Voice Command Buttons

1 — Push To Initiate Or To Answer A Phone Call, Send Or Receive A Text
2 — For All Radios: Push To Begin Radio, Media, Or Climate Functions. For Uconnect 4C NAV System Only: Push To Begin Navigation Function
3 — Push To End Call

Basic Voice Commands

The basic Voice Commands below can be given at any point while using your Uconnect system.

Push the VR button . After the beep, say:

- " **Cancel**" to stop a current voice session
- " **Help**" to hear a list of suggested Voice Commands
- " **Repeat**" to listen to the system prompts again

Notice the visual cues that inform you of your voice recognition system's status. Cues appear on the touch-screen.

Radio

Use your voice to quickly get to the AM, FM or SiriusXM Satellite Radio stations you would like to hear. (Subscription or included SiriusXM Satellite Radio trial required.)

Push the VR button . After the beep, say:

- " **Tune to** ninety-five-point-five FM"
- " **Tune to Satellite Channel** Hits 1"

TIP: At any time, if you are not sure of what to say or want to learn a Voice Command, push the VR button and say " **Help**." The system provides you with a list of commands.

Uconnect 3 Radio

Uconnect 4 Radio

Uconnect 4C/4C NAV Radio

Media

Uconnect offers connections via USB, Bluetooth and auxiliary ports (if equipped). Voice operation is only available for connected USB and AUX devices. (Remote CD player optional and not available on all vehicles.)

Push the VR button . After the beep, say one of the following commands and follow the prompts to switch your media source or choose an artist.

- " **Change source to** Bluetooth"
- " **Change source to** AUX"
- " **Change source to** USB"
- " **Play artist** Beethoven"; " **Play album** Greatest Hits"; " **Play song** Moonlight Sonata"; " **Play genre** Classical"

TIP: Press the Browse button on the touchscreen to see all of the music on your USB device. Your Voice Command must match **exactly** how the artist, album, song and genre information is displayed.

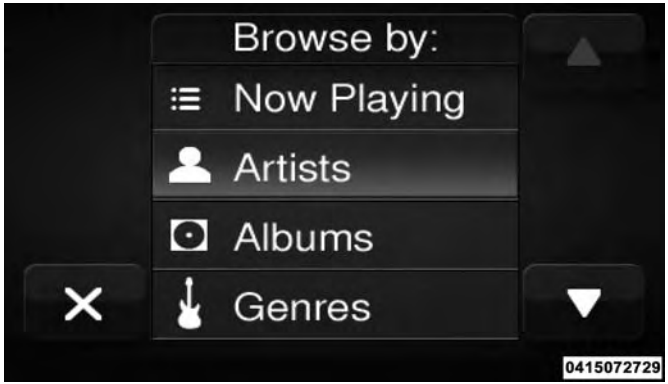

Uconnect 3 Media

Uconnect 4 Media

Uconnect 4C/4C NAV Media

Phone

Making and answering hands-free phone calls is easy with Uconnect. When the Phonebook button is illuminated on your touchscreen, your system is ready. Check UconnectPhone.com for mobile phone compatibility and pairing instructions.

Push the VR button or Phone button . After the beep, say one of the following commands:

- " **Call** John Smith"
- " **Dial** 123-456-7890 and follow the system prompts"
- " **Redial** (call previous outgoing phone number)"
- " **Call back** (call previous incoming phone number)"

TIP: When providing a Voice Command, push the VR button or Phone button and say " **Call**," then pronounce the name **exactly** as it appears in your phone book. When a contact has multiple phone numbers, you can say " **Call** John Smith **work**."

Uconnect 3 Phone

Uconnect 4 Phone

Uconnect 4C/4C NAV Phone

Voice Text Reply — If Equipped

Uconnect announces **incoming** text messages. Push the VR button or Phone button (if enabled) and say " **Listen**." (Must have compatible mobile phone paired to Uconnect system.)

1. Once an incoming text message is read to you, push the VR button or Phone button (if enabled). After the beep, say: " **Reply**."
2. Listen to the Uconnect prompts. After the beep, repeat one of the pre-defined messages and follow the system prompts.

PRE-DEFINED VOICE TEXT REPLY RESPONSES		
Yes.	Stuck in traffic.	See you later.
No.	Start without me.	I'll be late.
Okay.	Where are you?	I will be 5 <or 10, 15, 20, 25, 30, 45, 60> minutes late.
Call me.	Are you there yet?	
I'll call you later.	I need directions.	See you in 5 <or 10, 15, 20, 25, 30, 45, 60> minutes.
I'm on my way.	Can't talk right now.	
I'm lost.		Thanks.

NOTE: Only use the numbering listed, otherwise the system does not transpose the message.

TIP: Your mobile phone must have the full implementation of the **Message Access Profile (MAP)** to take advantage of this feature. For details about MAP, visit UconnectPhone.com.

Apple iPhone iOS 6 or later supports reading **incoming** text messages only. To enable this feature on your Apple iPhone, follow these four simple steps:

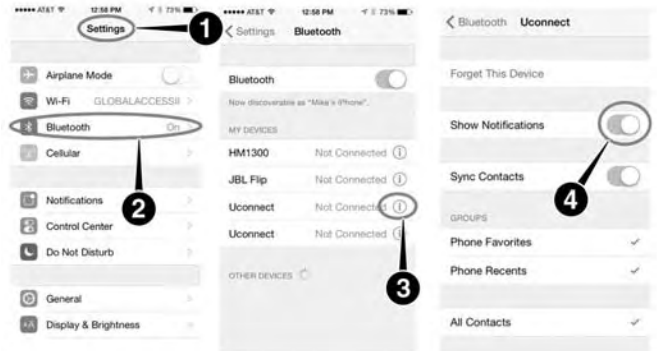

iPhone Notification Settings

1 — Select "Settings"
2 — Select "Bluetooth"
3 — Select The (i) For The Paired Vehicle
4 — Turn On "Show Notifications"

TIP: Voice Text Reply is not compatible with iPhone, but if your vehicle is equipped with Siri Eyes Free, you can use your voice to send a text message.

Climate

Too hot? Too cold? Adjust vehicle temperatures hands-free and keep everyone comfortable while you keep moving ahead. (If vehicle is equipped with climate control.)

Push the VR button . After the beep, say one of the following commands:

- " **Set the driver temperature to** 70 **degrees**"
- " **Set the passenger temperature to** 70 **degrees**"

TIP: Voice Command for Climate may only be used to adjust the interior temperature of your vehicle. Voice Command will not work to adjust the heated seats or steering wheel if equipped.

Uconnect 4 Climate

Uconnect 4C/4C NAV Climate

Navigation (4C NAV) — If Equipped

The Uconnect navigation feature helps you save time and become more productive when you know exactly how to get to where you want to go.

1. To enter a destination, push the VR button . After the beep, say: " **Find address** 800 Chrysler Drive Auburn Hills, Michigan."
2. Then follow the system prompts.

TIP: To start a POI search, push the VR button . After the beep, say: " **Find nearest** coffee shop."

Uconnect 4C NAV Navigation

SiriusXM Guardian (4C/4C NAV) — If Equipped

CAUTION!

Some SiriusXM Guardian services, including SOS Call and Roadside Assistance Call will NOT work without an operable LTE (voice/data) or 3G or 4G (data) network connection compatible with your device.

NOTE: Your vehicle may be transmitting data as authorized by the subscriber.

An included trial and/or subscription is required to take advantage of the SiriusXM Guardian services in the next section of this guide. To register with SiriusXM Guardian, press the Apps button on the Uconnect 4C/4C NAV touchscreen to get started.

NOTE: SiriusXM Guardian is available only on equipped vehicles purchased within the continental United States, Alaska, Hawaii and Canada. Services can only be used where coverage is available; see coverage map for details.

SOS Call

Theft Alarm Notification

Remote Door Lock/Unlock

Send & Go

Vehicle Finder

Stolen Vehicle Assistance

Remote Vehicle Start**

Remote Horn & Lights

Roadside Assistance Call

Vehicle Health Reports**

Vehicle Health Alert**

Performance Pages Plus**

**If vehicle is equipped.

Register (4C/4C NAV)

To unlock the full potential of SiriusXM Guardian in your vehicle, you must activate your SiriusXM Guardian services.

1. Press the Apps icon on the bottom of your in-vehicle touchscreen.
2. Select the Activate Services icon from your list of apps.

3. Select “Customer Care” to speak with a SiriusXM Guardian Customer Care agent who will activate services in your vehicle, or select “Enter Email” to activate on the web.

- U.S. residents visit: www.siriusxm.com/guardian.
- Canadian residents visit: www.siriusxm.ca/guardian.

Vehicle Health Report/Alert (4C/4C NAV)

Your vehicle will send you a monthly email report, which summarizes the performance of your vehicle’s key systems so you can stay on top of your vehicle’s maintenance needs if you are registered for SiriusXM Guardian. Your vehicle will also send you Vehicle Health Alerts when it detects issues with its key systems that need your attention. For further information, refer to your Uconnect Owner’s Manual Supplement.

Mobile App (4C/4C NAV)

You’re only a few steps away from using remote commands and sending a destination from your phone to your vehicle.

Mobile App

To use the Uconnect Mobile App:

1. Once you have registered your SiriusXM Guardian services, download the Uconnect App to your mobile device. Use your Owner Account login and password to open the app.
2. Once on the “Remote” screen, you can begin using Remote Door Lock/Unlock, Remote Vehicle Start, and activate your horn and lights remotely, if equipped.

3. Press the "Location" button on the bottom menu bar of the app to bring up a map to locate your vehicle or send a location to your Uconnect Navigation using Vehicle Finder and Send & Go , if equipped.
4. Press the "Settings" side menu in the upper left corner of the app to bring up app settings.

NOTE: For further information please visit DriveUconnect.com (U.S. Residents) or DriveUconnect.ca (Canadian Residents).

SiriusXM Travel Link (4C NAV)

Need to find a gas station, view local movie listings, check a sports score or the 5 - day weather forecast? SiriusXM Travel Link is a suite of services that brings a wealth of information right to your Uconnect 4C NAV system. (Not available for Uconnect 4 system.)

Push the VR button . After the beep, say one of the following commands:

- " **Show fuel prices**"
- " **Show 5 - day weather forecast**"
- " **Show extended weather**"

TIP: Traffic alerts are not accessible with Voice Command.

SiriusXM Travel Link

Siri Eyes Free — If Equipped

Siri lets you use your voice to send text messages, select media, place phone calls and much more. Siri uses your natural language to understand what you mean and responds back to confirm your requests. The system is

designed to keep your eyes on the road and your hands on the wheel by letting Siri help you perform useful tasks.

To enable Siri, push and hold, then release the Uconnect Voice Recognition (VR) button on the steering wheel. After you hear a double beep you can ask Siri to play podcasts and music, get directions, read text messages and many other useful requests.

Uconnect 4 Siri Eyes Free Available

Uconnect 4C/4C NAV With 8.4–inch Siri Eyes Free Available

Using Do Not Disturb

With Do Not Disturb, you can disable notifications from incoming calls and texts, allowing you to keep your eyes on the road and hands on the wheel. For your convenience, there is a counter display to keep track of your missed calls and text messages while you were using Do Not Disturb.

Do Not Disturb can automatically reply with a text message, a call, or both, when declining an incoming call and send it to voicemail.

Automatic reply messages can be:

- "I am driving right now, I will get back to you shortly."
- Create a custom auto reply message up to 160 characters.

While in Do Not Disturb, Conference Call can be selected so you can still place a second call without being interrupted by incoming calls.

NOTE:

- Only the beginning of your custom message will be seen on the touchscreen.
- Reply with text message is not compatible with iPhones.
- Auto reply with text message is only available on phones that support Bluetooth MAP.

Android Auto — If Equipped

NOTE: Feature availability depends on your carrier and mobile phone manufacturer. Some Android Auto features may or may not be available in every region and/or language.

Android Auto allows you to use your voice to interact with Android's best-in-class speech technology through your vehicle's voice recognition system, and use your smartphone's data plan to project your Android powered smartphone and a number of its apps onto your Uconnect touchscreen. Connect your Android 5.0 (Lollipop), or higher, to one of the media USB ports, using the factory-provided USB cable, and press the new Android Auto icon that replaces your "Phone" icon on the main menu bar to begin Android Auto. Push and hold the VR button on the steering wheel, or press and hold the "Microphone" icon within Android Auto, to activate Android's VR, which recognizes natural voice commands, to use a list of your smartphone's features:

- Maps
- Music
- Phone
- Text Messages
- Additional Apps

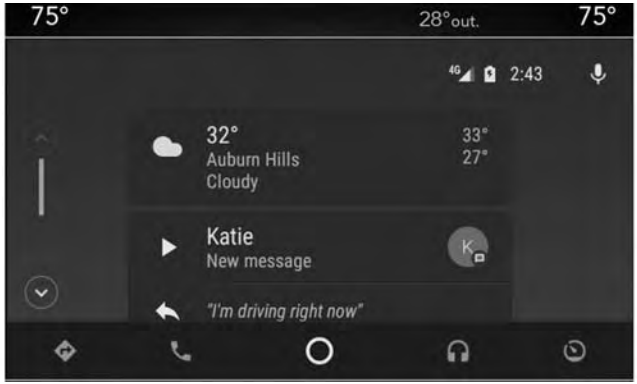

Android Auto On 7-inch Display

Android Auto On 8.4-inch Display

Refer to your Uconnect Owner's Manual Supplement for further information.

NOTE: Requires compatible smartphone running Android 5.0 Lollipop or higher and download app on Google Play. Android, Android Auto, and Google Play are trademarks of Google Inc.

Apple CarPlay — If Equipped

NOTE: Feature availability depends on your carrier and mobile phone manufacturer. Some Apple CarPlay features may or may not be available in every region and/or language.

Apple CarPlay allows you to use your voice to interact with Siri through your vehicle's voice recognition system, and use your smartphone's data plan to project your iPhone and a number of its apps onto your Uconnect touchscreen. Connect your iPhone 5, or higher, to one of the media USB ports, using the factory-provided Lightning cable, and press the new CarPlay icon that replaces your "Phone" icon on the main menu bar to begin Apple CarPlay. Push and hold the VR button on the steering wheel, or press and hold the "Home" button within Apple CarPlay, to activate Siri, which recognizes natural voice commands to use a list of your iPhone's features:

- Phone
- Music
- Messages
- Maps — if equipped
- Additional Apps — if equipped

Apple CarPlay On 7-inch Display

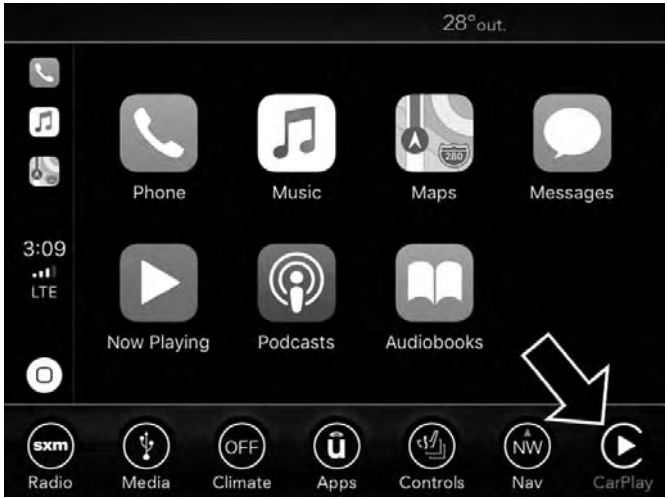

Apple CarPlay On 8.4-inch Display

Refer to your Uconnect Owner's Manual Supplement for further information.

NOTE: Requires compatible iPhone. See dealer for phone compatibility. Data plan rates apply. Vehicle user interface is a product of Apple. Apple CarPlay is a trademark of Apple Inc. iPhone is a trademark of Apple Inc., registered in the US and other countries. Apple terms of use and privacy statements apply.

General Information

The following regulatory statement applies to all Radio Frequency (RF) devices equipped in this vehicle:

This device complies with Part 15 of the FCC Rules and with Industry Canada license-exempt RSS standard(s). Operation is subject to the following two conditions:

1. This device may not cause harmful interference, and
2. This device must accept any interference received, including interference that may cause undesired operation.

NOTE: Changes or modifications not expressly approved by the party responsible for compliance could void the user's authority to operate the equipment.

Additional Information

© 2018 FCA US LLC. All rights reserved. Mopar and Uconnect are registered trademarks and Mopar Owner Connect is a trademark of FCA US LLC. Android is a trademark of Google Inc. SiriusXM and all related marks and logos are trademarks of SiriusXM Radio Inc.

Uconnect System Support:

- U.S. residents visit www.DriveUconnect.com or call: 1-877-855-8400(24 hours a day 7 days a week)
- Canadian residents visit www.DriveUconnect.ca or call: 1-800-465-2001(English) or 1-800-387-9983(French)

SiriusXM Guardian services support:

- U.S. residents visit www.siriusxm.com/guardian or call: 1-844-796-4827
- Canadian residents visit www.siriusxm.ca/guardian or call: 1-877-324-9091

CUSTOMER ASSISTANCE

CONTENTS

- SUGGESTIONS FOR OBTAINING SERVICE FOR YOUR VEHICLE 572
  - Prepare For The Appointment 572
  - Prepare A List 572
  - Be Reasonable With Requests 572
- IF YOU NEED ASSISTANCE 572
  - FCA US LLC Customer Center 573
  - FCA Canada Inc. Customer Center. 573
  - In Mexico Contact 573
  - Puerto Rico And U.S. Virgin Islands. 573
  - Customer Assistance For The Hearing Or Speech Impaired (TDD/TTY) 574
  - Service Contract 574
- WARRANTY INFORMATION 575
- MOPAR PARTS 575
- REPORTING SAFETY DEFECTS 575
  - In The 50 United States And Washington, D.C. . .575
  - In Canada 576
- PUBLICATION ORDER FORMS 576

SUGGESTIONS FOR OBTAINING SERVICE FOR YOUR VEHICLE

Prepare For The Appointment

If you are having warranty work done, be sure to have the right papers with you. Take your warranty folder. All work to be performed may not be covered by the warranty. Discuss additional charges with the service manager. Keep a maintenance log of your vehicle's service history. This can often provide a clue to the current problem.

Prepare A List

Make a written list of your vehicle's problems or the specific work you want done. If you've had an accident or work done that is not on your maintenance log, let the service advisor know.

Be Reasonable With Requests

If you list a number of items and you must have your vehicle by the end of the day, discuss the situation with the service advisor and list the items in order of priority. At many authorized dealers, you may obtain a rental vehicle at a minimal daily charge. If you need a rental, it is advisable to make these arrangements when you call for an appointment.

IF YOU NEED ASSISTANCE

The manufacturer and its authorized dealer are vitally interested in your satisfaction. We want you to be happy with our products and services.

Warranty service must be done by an authorized dealer. We strongly recommend that you take the vehicle to an authorized dealer. They know your vehicle the best, and are most concerned that you get prompt and high quality service. The manufacturer's authorized dealer have the facilities, factory-trained technicians, special tools, and the latest information to ensure the vehicle is fixed correctly and in a timely manner.

This is why you should always talk to an authorized dealer service manager first. Most matters can be resolved with this process.

- If for some reason you are still not satisfied, talk to the general manager or owner of the authorized dealer. They want to know if you need assistance.
- If an authorized dealer is unable to resolve the concern, you may contact the manufacturer's customer center.

Any communication to the manufacturer's customer center should include the following information:

- Owner's name and address
- Owner's telephone number (home and office)
- Authorized dealer name
- Vehicle Identification Number (VIN)
- Vehicle delivery date and mileage

FCA US LLC Customer Center

P.O. Box 21–8004

Auburn Hills, MI 48321–8004

Phone: (877) 426-5337

FCA Canada Inc. Customer Center

P.O. Box 1621

Windsor, Ontario N9A 4H6

Phone: (800) 465-2001 English / (800) 387-9983 French

In Mexico Contact

Av. Prolongacion Paseo de la Reforma, 1240

Sante Fe C.P. 05109

Mexico, D. F.

In Mexico City: 800-505-1300

Outside Mexico City: +(52)55 50817568

Puerto Rico And U.S. Virgin Islands

FCA Caribbean LLC

P.O. Box 191857

San Juan 00919-1857

Phone: (877) 426-5337

Fax: (787) 782-3345

Customer Assistance For The Hearing Or Speech Impaired (TDD/TTY)

To assist customers who have hearing difficulties, the manufacturer has installed special TDD (Telecommunication Devices for the Deaf) equipment at its customer center. Any hearing or speech impaired customer, who has access to a TDD or a conventional teletypewriter (TTY) in the United States, can communicate with the manufacturer by dialing 1-800-380-CHRY.

Canadian residents with hearing difficulties that require assistance can use the special needs relay service offered by Bell Canada. For TTY teletypewriter users, dial 711 and for Voice callers, dial 1-800-855-0511 to connect with a Bell Relay Service operator.

Service Contract

You may have purchased a service contract for a vehicle to help protect you from the high cost of unexpected repairs after the manufacturer's New Vehicle Limited Warranty expires. The manufacturer stands behind only the manufacturer's service contracts. If you purchased a manufacturer's service contract, you will receive Plan Provisions and an Owner Identification Card in the mail within three weeks of the vehicle delivery date. If you have any questions about the service contract, call the manufacturer's Service Contract National Customer Hotline at 1-800-521-9922 (Canadian residents, call (800) 465-2001 English / (800) 387-9983 French).

The manufacturer will not stand behind any service contract that is not the manufacturer's service contract. It is not responsible for any service contract other than the manufacturer's service contract. If you purchased a service contract that is not a manufacturer's service contract, and you require service after the manufacturer's New Vehicle Limited Warranty expires, please refer to the contract documents, and contact the person listed in those documents.

We appreciate that you have made a major investment when you purchased the vehicle. An authorized dealer has also made a major investment in facilities, tools, and training to assure that you are absolutely delighted with the ownership experience. You will be pleased with their sincere efforts to resolve any warranty issues or related concerns.

WARNING!

Engine exhaust (internal combustion engines only), some of its constituents, and certain vehicle components contain, or emit, chemicals known to the State of California to cause cancer and birth defects, or other reproductive harm. In addition, certain fluids contained in vehicles and certain products of component wear contain, or emit, chemicals known to the State of California to cause cancer and birth defects, or other reproductive harm.

WARRANTY INFORMATION

See the Warranty Information Booklet for the terms and provisions of FCA US LLC warranties applicable to this vehicle and market.

MOPAR PARTS

Mopar fluids, lubricants, parts, and accessories are available from an authorized dealer. They are recommended for your vehicle in order to help keep the vehicle operating at its best.

REPORTING SAFETY DEFECTS

In The 50 United States And Washington, D.C.

If you believe that your vehicle has a defect that could cause a crash or cause injury or death, you should immediately inform the National Highway Traffic Safety Administration (NHTSA) in addition to notifying FCA US LLC.

If NHTSA receives similar complaints, it may open an investigation, and if it finds that a safety defect exists in a group of vehicles, it may order a recall and remedy campaign. However, NHTSA cannot become involved in individual problems between you, an authorized dealer or FCA US LLC.

To contact NHTSA, you may call the Vehicle Safety Hotline toll free at 1-888-327-4236 (TTY: 1-800-424-9153); or go to http://www.safercar.gov; or write to: Administrator, NHTSA, 1200 New Jersey Avenue, SE., West Building, Washington, D.C. 20590. You can also obtain other information about motor vehicle safety from http://www.safercar.gov.

In Canada

If you believe that your vehicle has a safety defect, you should contact the Customer Service Department immediately. Canadian customers who wish to report a safety defect to the Canadian government should contact Transport Canada, Motor Vehicle Defect Investigations and Recalls at 1-800-333-0510 or go to http://www.tc.gc.ca/roadsafety/.

PUBLICATION ORDER FORMS

To order the following manuals, you may use either the website or the phone numbers listed below.

Service Manuals

These comprehensive Service Manuals provide the information that students and professional technicians need in diagnosing/troubleshooting, problem solving, maintaining, servicing, and repairing FCA US LLC vehicles. A complete working knowledge of the vehicle, system, and/or components is written in straightforward language with illustrations, diagrams, and charts.

Diagnostic Procedure Manuals

Diagnostic Procedure Manuals are filled with diagrams, charts and detailed illustrations. These practical manuals make it easy for students and technicians to find and fix problems on computer-controlled vehicle systems and features. They show exactly how to find and correct problems the first time, using step-by-step troubleshooting and drivability procedures, proven diagnostic tests and a complete list of all tools and equipment.

Owner's Manuals

These Owner's Manuals have been prepared with the assistance of service and engineering specialists to acquaint you with specific FCA US LLC vehicles. Included are starting, operating, emergency and maintenance procedures as well as specifications, capabilities and safety tips.

Call toll free at:

- **1-800-890-4038 (U.S.)**
- **1-800-387-1143 (Canada)**

Or

Visit us on the Worldwide Web at:

- www.techauthority.com (U.S.)

INDEX

About Your Brakes 490
Adaptive Cruise Control (ACC) (Cruise Control) 266
Adding Engine Coolant (Antifreeze) 451
Adding Fuel 343
Adding Washing Fluid 441
Additives, Fuel 495
Adjust
  Forward 44
  Rearward 44
Air Bag 195
  Advance Front Air Bag 195
  Air Bag Operation 196
  Air Bag Warning Light 193
  Driver Knee Air Bag 197
  Enhanced Accident Response 203, 427
  Event Data Recorder (EDR) 427
  Front Air Bag 195
  If Deployment Occurs 202
  Knee Impact Bolsters 197
  Maintaining Your Air Bag System 206
  Maintenance 206
  Redundant Air Bag Warning Light 194
  Side Air Bags 198
  Transporting Pets 224
Air Bag Light 130, 193, 226
Air Cleaner, Engine (Engine Air Cleaner Filter). 444
Air Conditioner Maintenance 445
Air Conditioner Refrigerant 445, 446
Air Conditioning 446
Air Conditioning Filter 84, 446
Air Conditioning, Operating Tips 83
Air Conditioning System 445
Air Pressure
  Tires 469
Alarm
  Arm The System 30
  Disarm The System 30
  Security Alarm 29, 133
Alterations/Modifications
  Vehicle 6
Android Auto 565
Antifreeze (Engine Coolant) 451, 497
  Disposal 453
Anti-Lock Brake System (ABS) 146
Anti-Lock Warning Light 134, 139
Apple CarPlay 567
Assist, Hill Start 148
Audio Systems (Radio). 503
Auto Down Power Windows 86
Automatic Headlights 57

Automatic High Beams 57
Automatic Temperature Control (ATC) 82
Automatic Transmission 246, 456
Adding Fluid 458, 499
Autostick 248
Fluid And Filter Change 458
Fluid Change 458
Fluid Level Check 457
Fluid Type 456, 499
Special Additives 457
Auto Up Power Windows 87
Auxiliary Electrical Outlet (Power Outlet) 108
Auxiliary Power Outlet 108
Axle Fluid 499
Axle Lubrication 499

Back-Up Camera 341
Battery. 131, 441
Charging System Light 131
Keyless Key Fob Replacement 19
Belts, Seat 226
Blind Spot Monitoring 158
Body Mechanism Lubrication 446
B-Pillar Location 464
Brake Assist System. 147
Brake Control System, Electronic. 147
Brake Fluid 499
Brakes 454
Brake System 454, 490
Anti-Lock (ABS) 490
Fluid Check 499
Master Cylinder 454
Warning Light 130
Brightness, Interior Lights 59
Bulbs, Light 228

Camera 341
Camera, Rear 341
Capacities, Fluid 497
Caps, Filler
Oil (Engine) 438, 443, 444
Radiator (Coolant Pressure) 452
Carbon Monoxide Warning 225, 496
Car Washes. 484
Cellular Phone 547
Certification Label 346
Changing A Flat Tire 405, 458
Chart, Tire Sizing. 460
Check Engine Light (Malfunction Indicator Light). . . .143
Checking Your Vehicle For Safety 224

Checks, Safety 224
Child Restraint 208
Child Restraints
  Booster Seats 211
  Child Seat Installation 221
  How To Stow An unused ALR Seat Belt 218
  Infant And Child Restraints 210
  LATCH Positions 213
  Locating The LATCH Anchorages 216
  Lower Anchors And Tethers For Children 213
  Older Children And Child Restraints 210
  Seating Positions 212
Child Safety Locks 39
Clean Air Gasoline 493
Cleaning
  Wheels 477
Climate Control 69
  Automatic 75
  Manual 71
Clutch 454
  Fluid 454
Coin Holder 112
Cold Weather Operation. 235
Compact Spare Tire 476
Connector
  UCI 546
  Universal Consumer Interface (UCI) 546
Console 112
  Floor 112
Contract, Service 574
Cooling Pressure Cap (Radiator Cap) 452
Cooling System. 440, 450
  Adding Coolant (Antifreeze) 451
  Coolant Level 441, 450, 453
  Cooling Capacity 497
  Disposal Of Used Coolant 453
  Drain, Flush, And Refill 450
  Inspection 453
  Points To Remember 453
  Pressure Cap 452
  Radiator Cap 452
  Selection Of Coolant (Antifreeze) 451, 497, 498
Corrosion Protection 483
Cruise Light 141, 142
Cupholders 113
Customer Assistance 572
Customer Programmable Features 506, 524
Cybersecurity 504

Daytime Running Lights 56
Dealer Service 442
Defroster, Rear Window 67
Defroster, Windshield 226
De-Icer, Remote Start 27
Dimmer Switch
  Headlight 56
Dipsticks
  Oil (Engine) 440, 442
Disabled Vehicle Towing 423
Disposal
  Antifreeze (Engine Coolant) 453
Do Not Disturb 564
Door Ajar 131, 132
Door Ajar Light 131, 132
Door Locks 38
Drag And Drop Menu 503
Driver's Seat Back Tilt 40, 41
Driving 360

Electrical Outlet, Auxiliary (Power Outlet) 108
Electric Brake Control System 147
  Anti-Lock Brake System 146
Electric Park Brake 237
Electric Parking Brake 237
Electronic Roll Mitigation (ERM) 155
Electronic Speed Control (Cruise Control) 263
Electronic Stability Control (ESC) 149
Electronic Throttle Control Warning Light 132
Emergency, In Case Of
  Hazard Warning Flasher 367
  Jacking 405, 458
  Jump Starting 416
  Overheating 419
  Tow Hooks 426
  Towing 423
Emission Control System Maintenance 143
Engine 438
  Air Cleaner 444
  Break-In Recommendations 236
  Checking Oil Level 440, 442
  Compartment 438
  Coolant (Antifreeze) 498
  Cooling 440, 450
  Exhaust Gas Caution 225, 496
  Fails To Start 234
  Flooded, Starting 234
  Fuel Requirements 492
  Jump Starting 416
  Oil 442, 497, 498

Oil Filler Cap 438, 443, 444
Oil Filter 444
Oil Selection 443, 497
Overheating 419
Starting 233
Engine Oil Viscosity. 444
Engine Oil Viscosity Chart 444
Enhanced Accident Response Feature 203, 427
Ethanol. 493
Exhaust Gas Cautions 225, 496
Exhaust System 225, 448
Exterior Lighting. 55
Exterior Lights 55, 228

Filters
Air Cleaner 444
Air Conditioning 84
Engine Oil 444, 498
Engine Oil Disposal 444
Flashers
Hazard Warning 367
Turn Signals 59, 141, 228
Flash-To-Pass 56
Flooded Engine Starting. 234
Floor Console 112
Fluid, Brake 499
Fluid Capacities. 497
Fluid Leaks. 228
Fluid Level Checks
Engine Oil 440, 442
Fluids And Lubricants 498
Fog Lights 58
Fold-Flat Seats 40
Forward Collision Warning 158, 166
Freeing A Stuck Vehicle 422
Fuel 492
Adding 343
Additives 495
Clean Air 493
Ethanol 493
Gasoline 492
Gauge 135
Materials Added 495
Methanol 493
Octane Rating 492, 498
Requirements 492
Specifications 498
Fuses 393

Gasoline, Clean Air 493

Gasoline, (Fuel) 492
Gasoline, Reformulated 493
Gauges
  Fuel 135
Gear Ranges 243
Gear Selector Override 420
Glass Cleaning 487
Gross Axle Weight Rating 348, 349
GVWR 347

Hazard Warning Flashers 367
Headlights
  Automatic 57
  Automatic High Beam 57
  Cleaning 484
  Delay 58
  High Beam/Low Beam Select Switch 56
  Lights On Reminder 58
  Passing 56
  Switch 55
  Time Delay 58
Head Restraints 48
Head Rests 48
Heated Mirrors 54
High Beam/Low Beam Select (Dimmer) Switch 56
Hill Descent Control 156
Hill Descent Control Indicator 156
Hill Start Assist 148
Hitches
  Trailer Towing 351
Holder, Coin 112
Holder, Cup 113
Hood Prop 95
Hood Release 95

Ignition 23
  Switch 23
Inside Rearview Mirror 51, 367
Instrument Cluster 122, 141
  Descriptions 141
  Engine Oil Reset 122
  Menu Items 123
Instrument Cluster Display 120
Instrument Panel Lens Cleaning 486
Interior Appearance Care 485
Interior Lights 59
Intermittent Wipers (Delay Wipers) 64
Introduction 4
Inverter

Power 109

Jacking And Tire Changing. 405
Jacking Instructions 407
Jack Location 405
Jack Operation 405, 407, 458
Jump Starting 416

Key Fob
Arm The Alarm 30
Disarm The Alarm 30
Keyless Entry 33
Programming Additional Key Fobs 22, 28
Remote Keyless Entry 17
Key Fob Battery Service (Remote Keyless Entry) 19
Key Fob Programming (Remote Keyless Entry) 22
Keyless Enter-N-Go. 33
Enter The Trunk 33
Lock The Vehicle's Doors 33
Passive Entry 33
Passive Entry Programming 33
Remote Control 33
Unlock From The Driver's Side 33
Unlock From The Passenger's Side 33
Keyless Entry 17
Keys 17
Replacement 22, 28

Lane Change And Turn Signals 59
LaneSense. 335
Lap/Shoulder Belts 184
Latches. 228
Lead Free Gasoline 492
Leaks, Fluid 228
Life Of Tires 472
Liftgate 97, 98
Closing 98
Opening 97
Liftgate Window Wiper/Washer 67
Light Bulbs 228
Lights. 228
Air Bag 130, 193, 226
Automatic Headlights 57
Automatic High Beam 57
Brake Assist Warning 154
Brake Warning 130
Cruise 141, 142
Daytime Running 56
Dimmer Switch, Headlight 56
Electronic Stability Program(ESP) Indicator 132

Exterior 228
Fog 58
Hazard Warning Flasher 367
Headlights 55
Headlights On Reminder 58
Headlight Switch 55
High Beam 56
High Beam/Low Beam Select 56
Hill Descent Control Indicator 156
Instrument Cluster 55
Intensity Control 59
Interior 59
Lights On Reminder 58
Malfunction Indicator (Check Engine) 135
Park 141
Passing 56
Seat Belt Reminder 133
Security Alarm 133
Tire Pressure Monitoring (TPMS) 173
Traction Control 154
Turn Signals 59, 141, 228
Vanity Mirror 55
Warning Instrument Cluster Descriptions 132, 141
Loading Vehicle. 346
Tires 464
Locks
Child Protection 39
Power Door 32
Low Tire Pressure System. 173
Lubrication, Body 446
Luggage Carrier 114
Lug Nuts 491

Maintenance. 94
Maintenance Free Battery 441
Maintenance Schedule 431
Malfunction Indicator Light (Check Engine) 135, 143
Manual
Service 576
Manual Transmission 242, 456
Fluid Level Check 456
Frequency Of Fluid Change 456
Lubricant Selection 456
Shift Speeds 243
Master Cylinder
Brakes 454
Methanol 493
Mirrors
Heated 54
Outside 52

Rearview 51, 367
Vanity 55
Modifications/Alterations
Vehicle 6
Monitor, Tire Pressure System. 173
Mopar Parts 575

New Vehicle Break-In Period 236

Occupant Restraints. 181
Octane Rating, Gasoline (Fuel) 492, 498
Oil Change Indicator 122
Reset 122
Oil, Engine. 442, 498
Capacity 497
Change Interval 443
Checking 440, 442
Dipstick 440, 442
Disposal 444
Filter 444, 498
Filter Disposal 444
Materials Added To 444
Pressure Warning Light 133
Recommendation 443, 497
Viscosity 443, 444, 497
Oil Filter, Change 444
Oil Filter, Selection. 444
Oil Pressure Light 133
Onboard Diagnostic System 142
Operating Precautions 142
Operator Manual
Owner's Manual 5, 576
Outside Rearview Mirrors 52
Overheating, Engine 419

Paint Care. 483
Parking Brake 237
ParkSense
Front And Rear 290
ParkSense Active Park Assist 307
ParkSense System, Rear 286
Personalized Main Menu 503
Pets 224
Placard, Tire And Loading Information 464
Power
Brakes 490
Door Locks 32
Inverter 109
Outlet (Auxiliary Electrical Outlet) 108
Sunroof 92

Windows 85
Power Seats
Forward 44
Rearward 44
Recline 45
Pregnant Women And Seat Belts 189
Preparation For Jacking 406
Pretensioners
Seat Belts 190

Radial Ply Tires 470
Radiator Cap (Coolant Pressure Cap). 452
Radio Frequency
General Information 22, 27, 29, 38
Radio Operation 547
Rain Sensitive Wiper System 65
Rear Camera 341
Rear Cross Path. 163
Rear ParkSense System 286, 290
Rearview Mirror 51
Rear Window Defroster 67
Rear Wiper/Washer. 67
Reclining Front Seats 42
Recreational Towing. 358
Reformulated Gasoline. 493
Refrigerant 446
Reminder, Lights On 58
Reminder, Seat Belt 182
Remote Control
Starting System 24
Remote Keyless Entry. 17, 18
Arm The Alarm 30
Disarm The Alarm 30
Keyless Enter-N-Go 33
Programming Additional Key Fobs 22, 28
Remote Sound System (Radio) Control 545
Remote Starting
Uconnect Customer Programmable Features 27
Uconnect Settings 27
Remote Starting System 24
Replacement Keys 22, 28
Replacement Tires 473
Reporting Safety Defects 575
Restraints, Child 208
Restraints, Head 48
Roll Over Warning 5
Roof Type Carrier 114
Rotation, Tires. 480

Safety Checks Inside Vehicle. 226

Safety Checks Outside Vehicle 228
Safety Defects, Reporting 575
Safety, Exhaust Gas 225
Safety Information, Tire 458
Safety Tips 224
Schedule, Maintenance. 431
Seat Belt Reminder 133
Seat Belts 182, 226
Adjustable Upper Shoulder Anchorage 188
Adjustable Upper Shoulder Belt Anchorage 188
Automatic Locking Retractor (ALR) 190
Child Restraints 208
Energy Management Feature 190
Front Seat 182, 184, 186
Inspection 226
Lap/Shoulder Belt Operation 186
Lap/Shoulder Belts 184
Lap/Shoulder Belt Untwisting 188
Operating Instructions 186
Pregnant Women 189
Pretensioners 190
Rear Seat 184
Reminder 182
Seat Belt Pretensioner 190
Seat Belt Reminder 182
Untwisting Procedure 188
Seat Belts Maintenance. 486
Seats 40, 44
Adjustment 40, 41, 44
Head Restraints 48
Rear Folding 40
Reclining 42
Seatback Release 41
Tilting 40, 41
Security Alarm 29, 133
Arm The System 30
Disarm The System 30
Selection Of Coolant (Antifreeze) 498
Sentry Key
Key Programming 28
Sentry Key Replacement 22, 28
Service Assistance 572
Service Contract 574
Service Manuals 576
Shifting
Manual Transmission 242
Shift Lever Override 420
Shoulder Belts. 184
Side View Mirror Adjustment. 52
Signals, Turn 59, 141, 228

Siri 563
SiriusXM Guardian
Vehicle Health Alert 562
Snow Chains (Tire Chains) 478
Snow Tires 475
Spare Tires. 475, 476, 477
Spark Plugs 498
Specifications
Fuel (Gasoline) 498
Oil 498
Speed Control
Distance Setting (ACC Only) 266
Mode Setting (ACC Only) 266
Speed Control (Cruise Control) 263
Starting 233
Button 23
Cold Weather 235
Engine Fails To Start 234
Remote 24
Starting And Operating 233
Starting Procedures 233
Steering
Tilt Column 50
Wheel, Heated 50
Wheel, Tilt 50
Steering Wheel Audio Controls 545
Steering Wheel Mounted Sound System Controls 545
Storage, Vehicle. 83
Stuck, Freeing 422
Sun Roof 92, 94
Closing 93
Opening 93
Sun Visor Extension. 106
Supplemental Restraint System – Air Bag. 195
Sway Control, Trailer. 149, 349
System, Remote Starting 24

Telescoping Steering Column 50
Temperature Control, Automatic (ATC) 82
Tilt Steering Column 50
Time Delay
Headlight 58
Tip Start 233
Tire And Loading Information Placard. 464
Tire Markings 459
Tires 228, 468, 475, 481
Aging (Life Of Tires) 472
Air Pressure 468
Chains 478
Changing 405, 458

Compact Spare 476
General Information 468, 475
High Speed 470
Inflation Pressure 469
Jacking 405, 458
Life Of Tires 472
Load Capacity 464, 465
Pressure Monitoring System (TPMS) 136, 173
Quality Grading 481
Radial 470
Replacement 473
Rotation 480
Safety 458, 468
Sizes 460
Snow Tires 475
Spare Tires 475, 476, 477
Spinning 471
Trailer Towing 354
Tread Wear Indicators 471
Tire Safety Information. 458
Tire Service Kit 413
Tongue Weight/Trailer Weight 353
Tow Hooks
Emergency 426
Towing 348
Disabled Vehicle 423
Guide 352
Recreational 358
Weight 352
Trailer Sway Control (TSC). 149
Trailer Towing. 348
Cooling System Tips 358
Hitches 351
Minimum Requirements 353
Trailer And Tongue Weight 353
Wiring 356
Trailer Towing Guide 352
Trailer Weight 352
Transmission
Automatic 246, 456
Fluid 499
Manual 242
Transporting Pets 224
Tread Wear Indicators 471
Turn Signals. 59, 141

Uconnect
Uconnect Settings 27, 506, 524
Uconnect Settings
Customer Programmable Features 27, 38, 506, 524

Passive Entry Programming 38, 536
Uniform Tire Quality Grades 481
Universal Consumer Interface (UCI) Connector 546
Unleaded Gasoline 492
Untwisting Procedure, Seat Belt 188

Vanity Mirrors 55
Vehicle Loading 346, 465
Vehicle Modifications/Alterations. 6
Vehicle Storage 83
Viscosity, Engine Oil 444
Voice Command 548
Voice Recognition System (VR) 548

Warning Flashers, Hazard 367
Warning Lights (Instrument Cluster Descriptions). . . .139
Warnings And Cautions 6
Warnings, Roll Over 5
Warranty Information 575
Washer
Adding Fluid 441
Washing Vehicle 484
Wheel And Wheel Tire Care 477
Wheel And Wheel Tire Trim 477
Wind Buffeting 88, 91, 93
Window Fogging 84
Windows
Power 85
Windshield Defroster 226
Windshield Wiper Blades 446
Wipers Blade Replacement 446
Wipers, Intermittent 64
Wipers, Rain Sensitive 65
Wrecker Towing 423

INSTALLATION OF RADIO TRANSMITTING EQUIPMENT

Special design considerations are incorporated into this vehicle's electronic system to provide immunity to radio frequency signals. Mobile two-way radios and telephone equipment must be installed properly by trained personnel. The following must be observed during installation.

The positive power connection should be made directly to the battery and fused as close to the battery as possible. The negative power connection should be made to body sheet metal adjacent to the negative battery connection. This connection should not be fused.

Antennas for two-way radios should be mounted on the roof or the rear area of the vehicle. Care should be used in mounting antennas with magnet bases. Magnets may affect the accuracy or operation of the compass on vehicles so equipped.

The antenna cable should be as short as practical and routed away from the vehicle wiring when possible. Use only fully shielded coaxial cable.

Carefully match the antenna and cable to the radio to ensure a low Standing Wave Ratio (SWR).

Mobile radio equipment with output power greater than normal may require special precautions.

All installations should be checked for possible interference between the communications equipment and the vehicle's electronic systems.

⚠ WARNING:

Operating, servicing and maintaining a passenger vehicle or off-road highway motor vehicle can expose you to chemicals including engine exhaust, carbon monoxide, phthalates, and lead, which are known to the State of California to cause cancer and birth defects or other reproductive harm. To minimize exposure, avoid breathing exhaust, do not idle the engine except as necessary, service your vehicle in a well-ventilated area and wear gloves or wash your hands frequently when servicing your vehicle. For more information go to www.P65Warnings.ca.gov/passenger-vehicle.

19BV-126-AA
©2018 FCA US LLC. All Rights Reserved.
Jeep is a registered trademark of FCA US LLC.

First Edition V1
Printed in the U.S.A.