Foreword

Welcome to the growing family of new NISSAN owners. This vehicle is delivered to you with confidence. It was produced using the latest techniques and strict quality control.

This manual was prepared to help you understand the operation and maintenance of your vehicle so that you may enjoy many miles of driving pleasure. Please read through this manual before operating your vehicle.

A separate Warranty Information Booklet explains details about the warranties covering your vehicle. The NISSAN Service and Maintenance Guide explains details about maintaining and servicing your vehicle. Additionally, a separate Customer Care/Lemon Law Booklet (U.S. only) will explain how to resolve any concerns you may have with your vehicle, as well as clarify your rights under your state's lemon law.

Your NISSAN dealer knows your vehicle best. When you require any service or have any questions, he will be glad to assist you with the extensive resources available to him.

READ FIRST — THEN DRIVE SAFELY

Before driving your vehicle please read your Owner's Manual carefully. This will ensure familiarity with controls and maintenance requirements, assisting you in the safe operation of your vehicle.

WARNING

IMPORTANT SAFETY INFORMATION
REMINDERS FOR SAFETY!

Follow these important driving rules to help ensure a safe and comfortable trip for you and your passengers!

- **Never drive under the influence of alcohol or drugs.**
- **Always observe posted speed limits and never drive too fast for conditions.**
- **Always use your seat belts. Refer to "Child safety" and "Child restraints" in the "Seats, restraints and supplemental air bag systems" section for precautions regarding children.**
- **Always provide information about the proper use of vehicle safety features to all occupants of the vehicle.**
- **Always review this Owner's Manual for important safety information.**

MODIFICATION OF YOUR VEHICLE

This vehicle should not be modified. Modification could affect its performance, safety or durability, and may even violate governmental regulations. In addition, damage or performance problems resulting from modification may not be covered under NISSAN warranties.

WHEN READING THE MANUAL

This manual includes information for all options available on this model. Therefore, you may find some information that does not apply to your vehicle.

All information, specifications and illustrations in this manual are those in effect at the time of printing. NISSAN reserves the right to change specifications or design at any time without notice.

IMPORTANT INFORMATION ABOUT THIS MANUAL

You will see various symbols in this manual. They are used in the following ways:

WARNING

This is used to indicate the presence of a hazard that could cause death or serious personal injury. To avoid or reduce the risk, the procedures must be followed precisely.

CAUTION

This is used to indicate the presence of a hazard that could cause minor or moderate personal injury or damage to your vehicle. To avoid or reduce the risk, the procedures must be followed carefully.

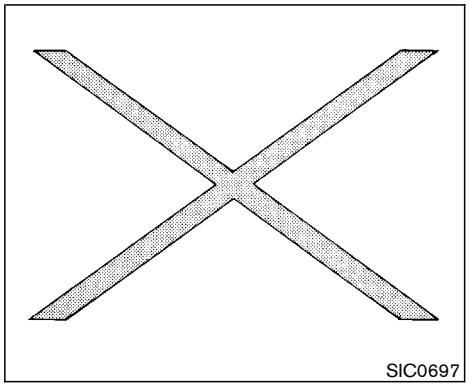

If you see this symbol, it means **Do not do this** or **Do not let this happen**.

CALIFORNIA PROPOSITION 65 WARNING

WARNING

Engine Exhaust, some of its constituents, and certain vehicle components contain or emit chemicals known to State of California to cause cancer and birth defects or other reproductive harm.

© 2002 NISSAN MOTOR CO., LTD.
TOKYO, JAPAN

All rights reserved. No part of this Owner's Manual may be reproduced or stored in a retrieval system, or transmitted in any form, or by any means, electronic, mechanical, photocopying, recording or otherwise, without the prior written permission of Nissan Motor Co., Ltd.

Welcome To The World Of NISSAN

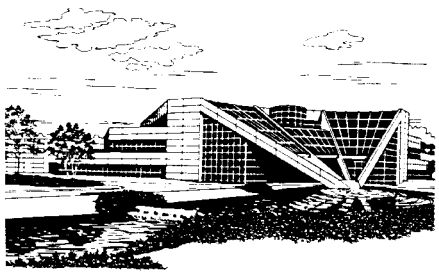

NISSAN TECHNICAL CENTER NORTH AMERICA, INC.
in Farmington Hills, Michigan

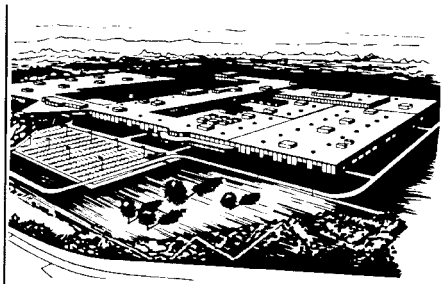

NISSAN MANUFACTURING FACILITY
in Smyrna, Tennessee

WFW0002

Your new NISSAN is the result of our dedication to produce the finest in safe, reliable and economical transportation. Your vehicle is the product of a successful worldwide company that manufactures cars and trucks in over 17 countries and distributes them in 170 nations.

NISSAN vehicles are designed and manufactured by Nissan Motor Co., Ltd. which was founded in Tokyo, Japan in 1933, and NISSAN affiliates world wide, collectively growing to become the fifth largest automaker in the world. In addition to cars and trucks, NISSAN also makes forklift trucks, marine engines, boats and other diversified products.

NISSAN has made a substantial and growing investment in North America. NISSAN'S commitment is nearly $4 billion dollars in capital investments in facilities across the continent. Some of the facilities include the Nissan Manufacturing facility in Smyrna, Tennessee, vehicle styling design at Nissan Design America in San Diego, California, and engineering at Nissan Technical Center North America in Farmington Hills, Michigan. Additionally, NISSAN employs nearly 18,000 people throughout the United States, Canada, and Mexico. An additional 71,000 people work for the 1,500 NISSAN and INFINITI dealers across North America.

NISSAN is also a substantial contributor to the Canadian economy. Nissan Canada Inc., its suppliers and over 140 dealers employ approximately 4,500 people. These include company employees and the staffs of NISSAN dealers all across Canada. In addition, many Canadians work for companies that supply NISSAN and NISSAN dealers with materials and services ranging from operation of port facilities and transportation services to the supply of lubricants, parts and accessories.

NISSAN pioneered the use of electronics and computers in automobiles, and has led the industry in improving both performance and fuel efficiency through new engine designs and the use of synthetic materials to reduce vehicle weight. The company has also developed ways to build quality into its vehicles at each stage of the production process, both through extensive use of automation and — most importantly — through an awareness that **people** are the central element in quality control.

From the time the parts arrived from our suppliers until you took delivery of your new Nissan, dozens of checks were made to ensure that only the best job was being done in producing and delivering your vehicle. NISSAN also takes great care to ensure that when you take your NISSAN to your dealer for maintenance, the service technician will perform his work according to the quality standards that have been established by the factory.

Safety has also been built into your NISSAN. As you know, seat belts are an integral part of the safety systems that will help protect you and your passengers in the event of a sudden stop or an accident. We urge you to use the seat belts every time you drive the vehicle.

The NISSAN story of growth and achievement reflects our major goal: to provide you, our customer, with a vehicle that is built with quality and craftsmanship — a product that we can be proud to build and you can be proud to own.

NISSAN CUSTOMER CARE PROGRAM

NISSAN CARES ...

Both NISSAN and your NISSAN dealer are dedicated to serving all your automotive needs. Your satisfaction with your vehicle and your NISSAN dealer are our primary concerns. Your NISSAN dealer is always available to assist you with all your automobile sales and service needs.

However, if there is something that your NISSAN dealer cannot assist you with or you would like to provide NISSAN directly with comments or questions, please contact our (NISSAN's) Consumer Affairs Department using our toll-free number:

For U.S. mainland customers
1-800-NISSAN-1
(1-800-647-7261)
For Hawaii customers
(808) 836-0888 (Oahu Number)
For Canadian customers
1-800-387-0122

The Consumer Affairs Department will ask for the following information:

— Your name, address, and telephone number
— Vehicle identification number (on dash panel)
— Date of purchase
— Current odometer reading
— Your NISSAN dealer's name
— Your comments or questions

OR

You can write to NISSAN with the information on the left at:

For U.S. mainland and Alaska customers
Nissan North America, Inc.
Consumer Affairs Department
P.O. Box 191
Gardena, California 90248-0191
For Hawaii customers
Nissan Motor Corporation in Hawaii
2880 Kilihau St.
Honolulu, Hawaii 96819
For Canada customers
Nissan Canada Inc.
5290 Orbitor Drive
Mississauga, Ontario L4W 4Z5

We appreciate your interest in NISSAN and thank you for buying a quality NISSAN vehicle.

Table of Contents

Seats, restraints and supplemental air bag systems	1
Instruments and controls	2
Pre-driving checks and adjustments	3
Display screen, heater, air conditioner and audio systems	4
Starting and driving	5
In case of emergency	6
Appearance and care	7
Maintenance and do-it-yourself	8
Technical and consumer information	9
Index	10

1 Seats, restraints and supplemental air bag systems

Seats 1-2
Front manual seat adjustment — passenger side ... 1-2
Front power seat adjustment 1-3
Rear seat adjustment 1-5
Head restraint adjustment 1-7
Active head restraint (front seats) 1-8
Armrest 1-9
Supplemental restraint system 1-9
Precautions on supplemental restraint system 1-9
Supplemental air bag warning labels 1-20
Supplemental air bag warning light 1-20
Seat belts 1-22
Precautions on seat belt usage 1-22
Child safety 1-24
Pregnant women 1-25
Injured persons 1-25
Three-point type seat belt with retractor 1-25
Rear center seat belt 1-29
Seat belt extenders 1-31
Seat belt maintenance 1-32
Child restraints 1-32
Precautions on child restraints 1-32
Installation on rear seat center or outboard positions 1-34
Latch (Lower Anchors and Tether for Children) system 1-39
Top tether strap child restraint 1-40
Installation on front passenger seat 1-42

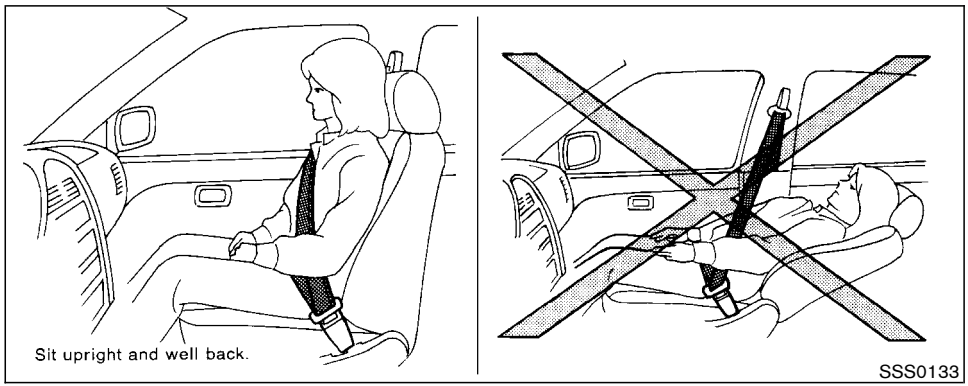

WARNING

- **Do not ride in a moving vehicle when the seatback is reclined. This can be dangerous. The shoulder belt will not be against your body. In an accident you could be thrown into it and receive neck or other serious injuries. You could also slide under the lap belt and receive serious internal injuries.**

- **For most effective protection when the vehicle is in motion, the seat should be upright. Always sit well back in the seat and adjust the seat belt properly. See "Precautions on seat belt usage" later in this section.**

FRONT MANUAL SEAT ADJUSTMENT — Passenger side

WARNING

After adjustment, gently rock in the seat to make sure it is securely locked.

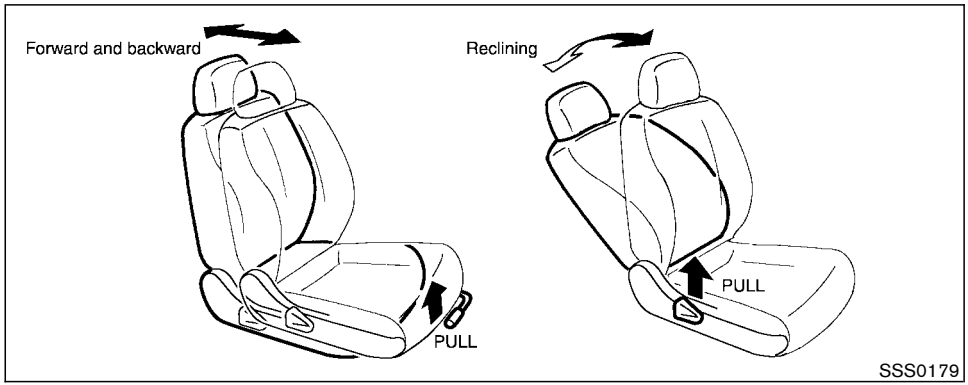

Forward and backward

Pull the lever up while you slide the seat forward or backward to the desired position. Release the lever to lock the seat in position.

Reclining

To recline the seatback, pull the lever up and lean back. To bring the seatback forward again, pull the lever and move your body forward. The seatback moves forward.

FRONT POWER SEAT ADJUSTMENT

WARNING

- **Do not adjust the driver's seat while driving so full attention may be given to vehicle operation.**
- **Do not leave children unattended inside the vehicle. They could unknowingly activate switches or controls. Unattended children could become involved in serious accidents.**

Operating tips

- The seat motor has an auto-reset overload protection circuit. If the motor stops during operation, wait 30 seconds, then reactivate the switch.
- Do not operate the power support seat for a long period of time when the engine is off. This will discharge the battery.

See "Automatic drive positioner" in the "3. Pre-driving checks and adjustments" for automatic seat positioner operation.

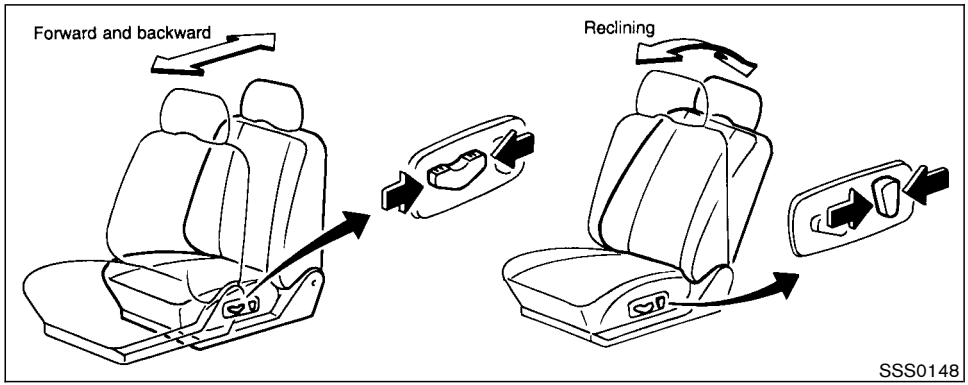

Forward and backward

Moving the switch forward or backward will slide the seat forward or backward to the desired position.

Reclining

Move the recline switch backward until the desired angle is obtained. To bring the seatback forward again, move the switch forward and move your body forward. The seatback will move forward.

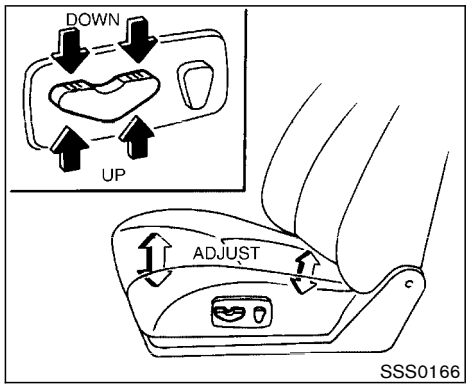

Seat lifter (if so equipped for driver's seat)

Push the front or rear end of the switch up or down to adjust the angle and height of the seat cushion.

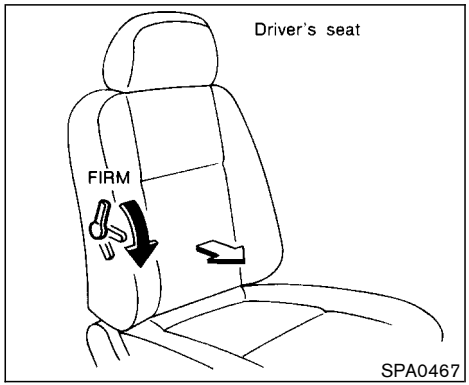

Lumbar support (if so equipped for driver's seat)

The lumbar support feature provides lower back support to the driver. Move the lever up or down to adjust the seat lumbar area.

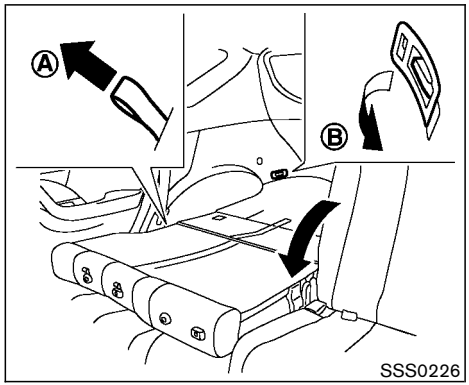

REAR SEAT ADJUSTMENT

Folding

1. Secure the seat belt at the belt hooks on the side wall. See "Seat belt hook" later in this section.
2. Secure the center seat belt and tongues into the retractor base. See "Stowing rear center seat belt" later in this section.
3. Put the seat belt buckles into the seat cushion.
   See "Storing rear seat belt buckles" later in this section.
4. Remove the head restraints.
5. After removing the tonneau cover (if so equipped) from each rear seatback, pull the strap on the rear seat (A) or pull the lever (B) beside the cargo area and fold the seatback.
6. When returning the seatbacks, be sure to install the head restraints and attach the rear center seat belt connector.

WARNING

- **Never allow anyone to ride in the cargo area or on the rear seat when it is in the fold-down position. Use of these areas by passengers without proper restraints could result in serious injury in an accident or sudden stop.**
- **It is extremely dangerous to ride in a cargo area inside of a vehicle. In a collision, people riding in these areas are more likely to be seriously injured or killed.**
- **Do not allow people to ride in any area of your vehicle that is not equipped with seats and seat belts.**

Be sure everyone in your vehicle is in a seat and using a seat belt properly.

- **Do not fold down the rear seats when occupants are in the rear seat area or any luggage is on the rear seat.**
- **Head restraints should be adjusted properly as they may provide significant protection against injury in an accident. Always replace and adjust them properly if they have been removed for any reason.**
- **If the head restraints are removed for any reason, they should be securely stored to prevent them from causing injury to passengers or damage to the vehicle in case of sudden braking or an accident.**
- **Properly secure all cargo to help prevent it from sliding or shifting. Do not place cargo higher than the seatbacks. In a sudden stop or collision, unsecured cargo could cause personal injury.**
- **When returning the seatbacks to the upright position, be certain they are completely secured in the latched position. If they are not completely secured in the right position, passengers may be injured in an accident or sudden stop.**
- **When returning the seatbacks, be sure to attach the rear center seat belt connector.**
- **Do not unfasten the rear center seat belt connector except when folding down the rear seat.**
- **When attaching the rear center seat belt connector, be certain that the seatbacks are completely secured in the latched position and the rear center seat belt connector is completely secured.**
- **If the center seat belt connector and the seatbacks are not secured in the correct position, serious personal injury may result in an accident or sudden stop.**

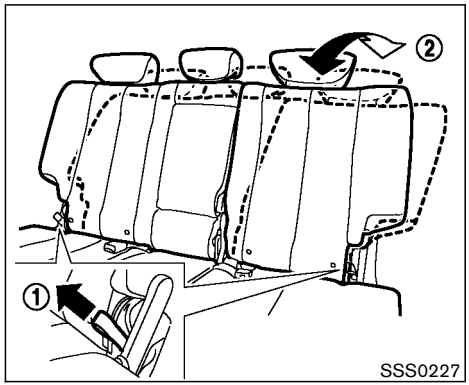

Reclining

Pull the reclining strap ① and position the seat back at the desired angle ②. Release the reclining strap ① after positioning the seat at the desired angle ②.

WARNING

- **Do not ride in a moving vehicle when the seatback is reclined. This can be dangerous. The shoulder belt will not be against your body. In an accident**

you could be thrown into it and receive neck or other serious injuries. You could also slide under the lap belt and receive serious internal injuries.

- **For most effective protection when the vehicle is in motion, the seat should be upright. Always sit well back in the seat and adjust the seat belt properly. See "Seat belts" later in this section for precautions on seat belt usage.**
- **After adjustment, check to be sure the seat is securely locked.**

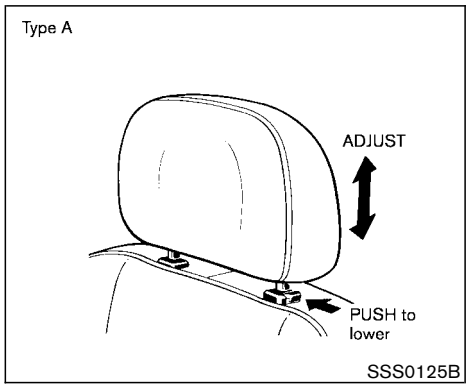

HEAD RESTRAINT ADJUSTMENT

To raise the head restraint, just pull it up. To lower, push the lock knob and push the head restraint down.

To adjust the head restraint forward and backward, push it in the direction required. (Type B)

WARNING

Head restraints should be adjusted properly as they may provide significant protection against injury in an accident.

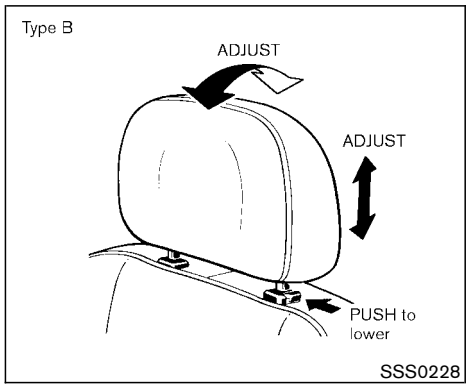

Do not remove them. Check the adjustment after someone else uses the seat.

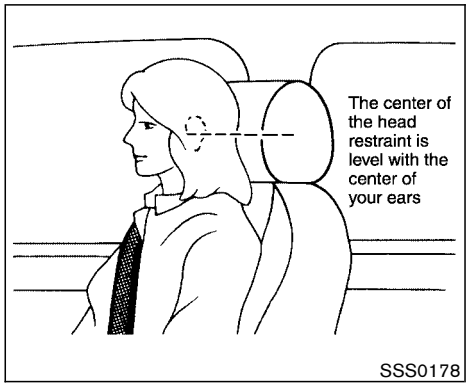

Adjust the head restraints so the center is level with the center of your ears.

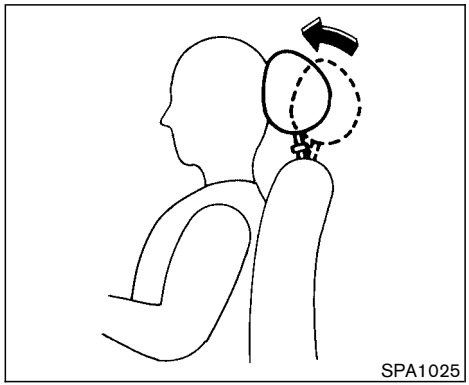

ACTIVE HEAD RESTRAINT (front seats)

WARNING

- **Always adjust the head restraints properly as specified in the previous section. Failure to do so can reduce the effectiveness of the active head restraint.**
- **Active head restraints are designed to supplement other safety systems. Always wear seat belts. No system can prevent all injuries in any accident.**
- **Do not attach anything to the head restraint stalks. Doing so could impair active head restraint function.**

The head restraint moves forward utilizing the force that the seatback receives from the occupant in a rear-end collision. The movement of the head restraint helps support the occupant's head by reducing its backward movement and helping absorb some of the forces that may lead to whiplash type injuries.

Active head restraints are effective for collisions at low to medium speeds in which it is said that whiplash injury occurs most.

Active head restraints operate only in certain rear-end collisions. After the collision, the head restraints return to their original positions.

Properly adjust the active head restraints as described in the previous section.

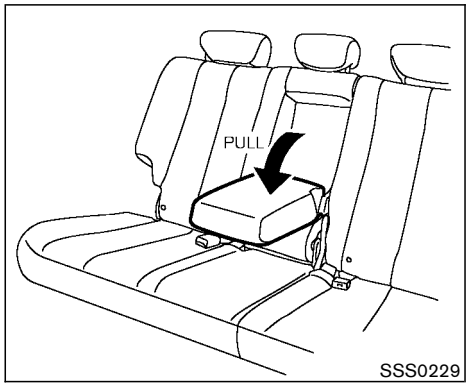

ARMREST

Pull the armrest forward until it is horizontal.

SUPPLEMENTAL RESTRAINT SYSTEM

PRECAUTIONS ON SUPPLEMENTAL RESTRAINT SYSTEM

This Supplemental Restraint System (SRS) section contains important information concerning the driver and passenger front impact supplemental air bags, front seat side-impact supplemental air bags, curtain side-impact air bags and front seat pre-tensioner seat belts.

Supplemental front impact air bag system: This system can help cushion the impact force to the face and chest of the driver and front passenger in certain frontal collisions.

Supplemental side-impact air bag system: This system can help cushion the impact force to the chest area of the driver and front passenger in certain side impact collisions. The front seat side-impact supplemental air bags are designed to inflate on the side where the vehicle is impacted.

Supplemental curtain side-impact air bag system: This system can help cushion the impact force to the head of occupants in front and rear outboard seating positions in certain side impact collisions. The curtain side-impact air bags are designed to inflate on the side where the vehicle is impacted.

These supplemental restraint systems are designed to **supplement** the crash protection provided by the driver and passenger seat belts and are **not a substitute** for them. Seat belts should always be correctly worn and the occupant seated a suitable distance away from the steering wheel, instrument panel, door finishers and side roof rails. (See “Seat belts” later in this section for instructions and precautions on seat belt usage.)

After turning the ignition key to the ON position, the supplemental air bag warning light illuminates. The supplemental air bag warning light will turn off after about 7 seconds if the systems are operational.

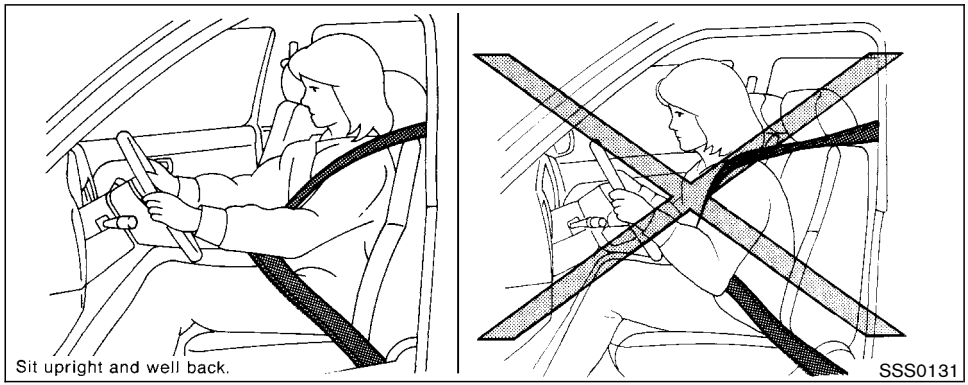

WARNING

- **The supplemental front air bags ordinarily will not inflate in the event of a side impact, rear impact, roll over, or lower severity frontal collision. Always wear your seat belts to help reduce the risk or severity of injury in various kinds of accidents.**
- **The seat belts and the supplemental front air bags are most effective when you are sitting well back and upright in the seat. Front air bags inflate with great force. If you are unrestrained, leaning forward, sitting sideways or out of position in any way, you are at greater risk of injury or death in a crash. You may also receive serious or fatal injuries from the supplemental front air bag if you are up against it when it inflates. Always sit back against the seatback and as far away as practical from the steering wheel or instrument panel. Always use the seat belts.**
- **The driver and front passenger seat belt buckles are equipped with sensors that detect if the seat belts are fastened. The air bag system monitors the severity of a collision and then inflates the air bags based on belt usage. Failure to properly wear seat belts can increase the risk or severity of injury in an accident.**
- **Keep hands on the outside of the steering wheel. Placing them inside the steering wheel rim could increase the risk that they are injured when the supplemental front air bag inflates.**

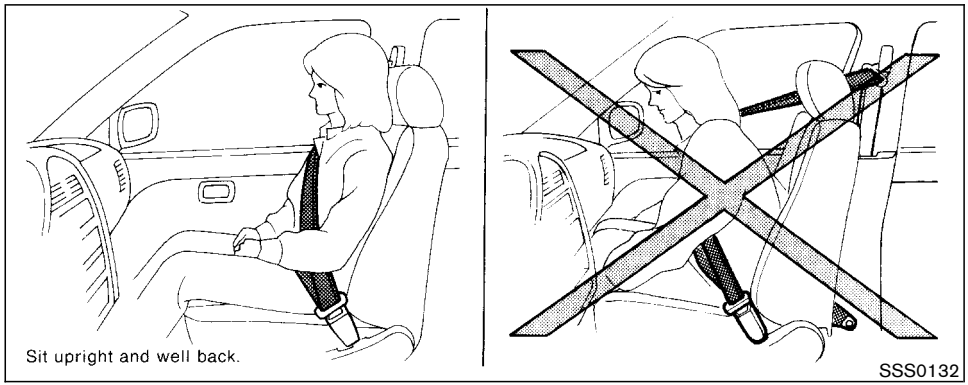
Sit upright and well back.
SSS0132

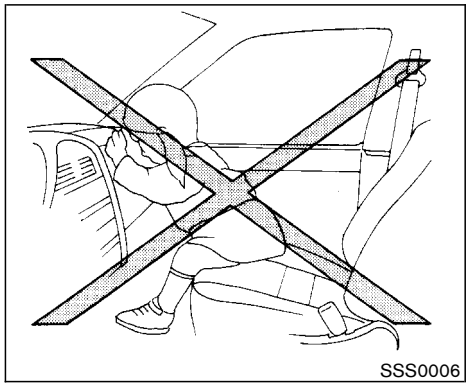
SSS0006

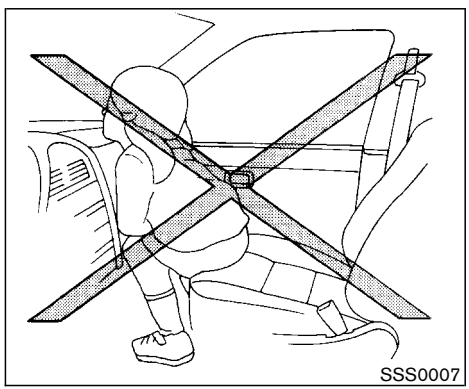
SSS0007

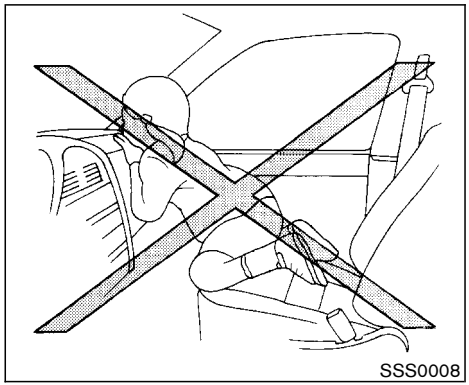
SSS0008

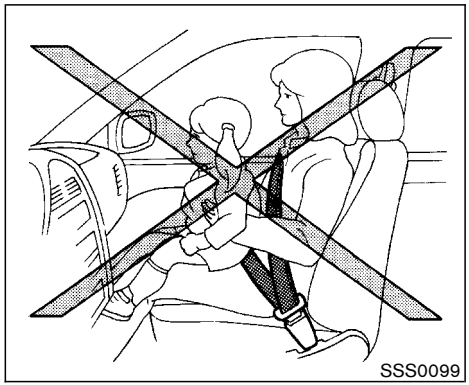
SSS0099

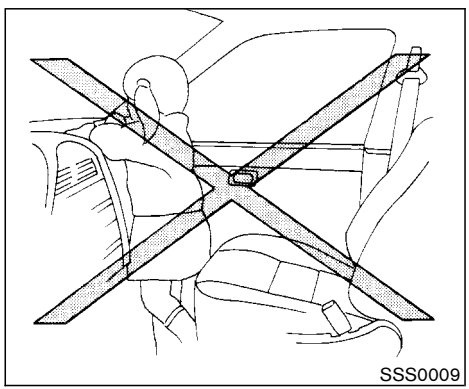
SSS0009

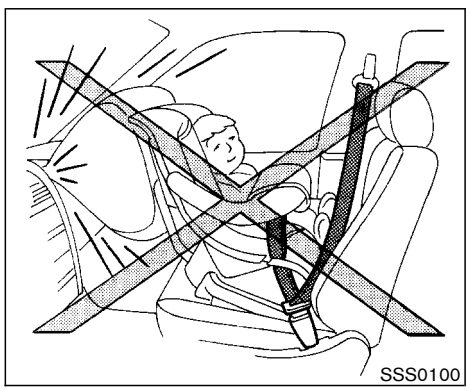
SSS0100

WARNING

- **Never let children ride unrestrained or extend their hands or face out of the window. Do not attempt to hold them in your lap or arms. Some examples of dangerous riding positions are shown in the previous illustrations. Preteens and children should be properly restrained in the rear seat if possible.**
- **Children may be severely injured or killed when the supplemental front air bags, side or curtain side-impact air bags inflate if they are not properly restrained. Preteens and children should be properly restrained in the rear seat if possible.**
- **Also never install a rear facing child restraint in the front seat. An inflating supplemental front air bag could seriously injure or kill your child. For additional information, see “Child restraints” later in this section.**

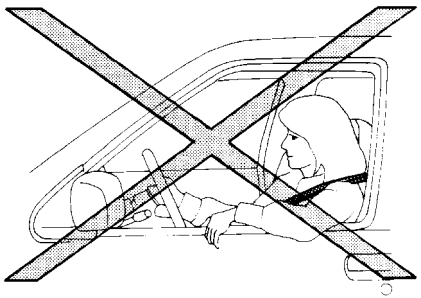

Do not lean against the door.

SSS0101

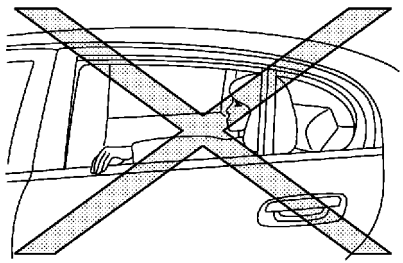

Do not lean against the door.

SSS0188

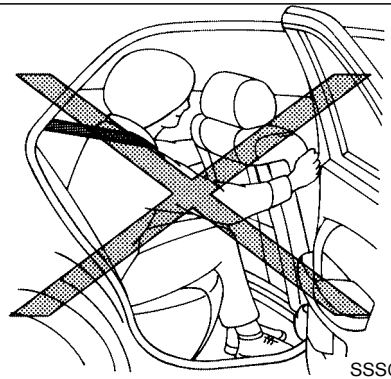

SSS0140

WARNING

Supplemental side air bag and curtain side-impact air bag:

- **The supplemental side air bag and curtain side-impact air bag ordinarily will not inflate in the event of a frontal impact, rear impact, rollover or lower severity side collision. Always wear your seat belts to help reduce the risk or severity of injury in various kinds of accidents.**
- **The seat belts, the supplemental side air bag and curtain side-impact air bag are most effective when you are sitting well back and upright in the seat. The side air bag and curtain side-impact air bag inflate with great force. Do not allow anyone to place their hand, leg or face near the side air bag on the side of the seatback of the front seat or near the side roof rails. Do not allow anyone sitting in the front seat or rear outboard seats to extend their hand out of the window or lean against the door. Some examples of dangerous riding positions are shown in the previous illustrations.**
- **When sitting in the rear seat, do not hold onto the seatback of the front seat. If the supplemental side air bag inflates, you may be seriously injured. Be especially careful with children, who should always be properly restrained.**

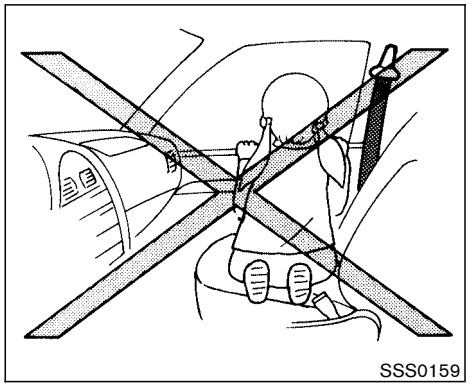

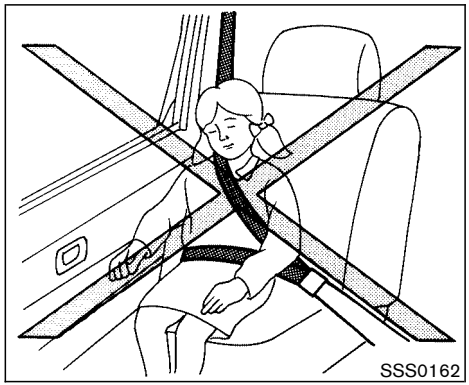

- **Do not use seat covers on the front seatbacks. They may interfere with supplemental side air bag inflation.**

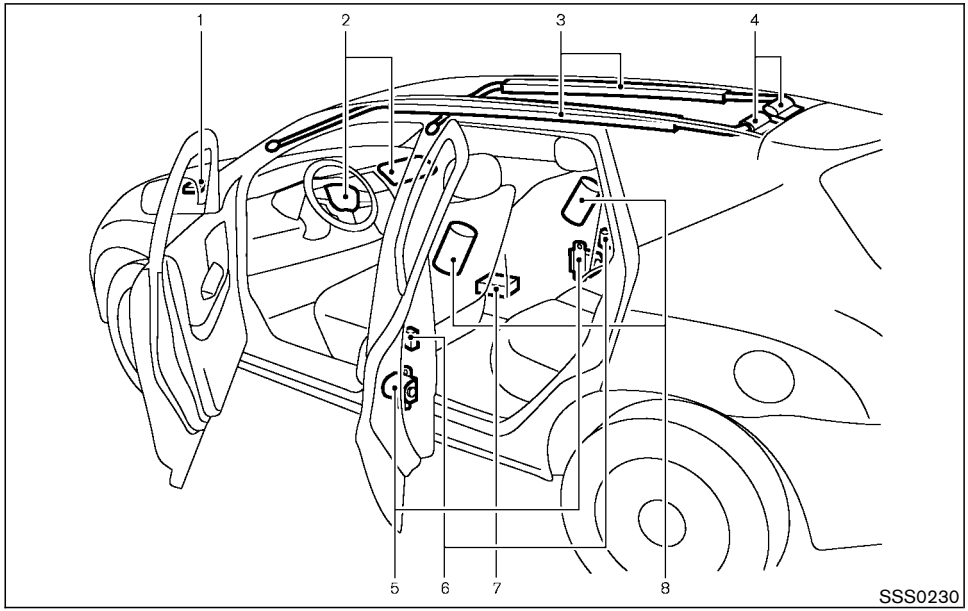

1. Crash zone sensor
2. Supplemental front air bag modules
3. Supplemental curtain side-impact air bags
4. Supplemental curtain side-impact air bag modules
5. Seat belt pre-tensioner retractor
6. Satellite sensors
7. Diagnosis sensor unit
8. Supplemental side air bag modules

Supplemental front air bag system

The driver supplemental air bag is located in the center of the steering wheel; the front passenger supplemental air bag is mounted in the instrument panel above the glove box. These systems are designed to meet optional certification requirements under U.S. regulations. They are also permitted in Canada. The optional certification allows front air bags to be designed to inflate somewhat less forcefully than previously. **However, all of the information, cautions and warnings in this manual still apply and must be followed.** The front air bags are designed to inflate in higher severity frontal collisions, although they may inflate if the forces in another type of collision are similar to those of a higher severity frontal impact. They may not inflate in certain frontal collisions. Vehicle damage (or lack of it) is not always an indication of proper supplemental air bag operation.

The supplemental air bag system has dual stage inflators for both the driver and passenger air bags. The system monitors information from the crash zone sensor, the diagnosis sensor unit and seat belt buckle sensors that detect if the seat belts are fastened, inflator operation is based on the severity of a collision and whether the seat belts are being used. Only one front air bag may inflate in a crash, depending on the crash severity and whether the front occupants are belted or

unbelted. This does not indicate improper performance of the system. If you have any questions about the performance of your air bag system, please contact your NISSAN dealer.

When the supplemental front air bag inflates, a fairly loud noise may be heard, followed by release of smoke. This smoke is not harmful and does not indicate a fire. Care should be taken not to inhale it, as it may cause irritation and choking. Those with a history of a breathing condition should get fresh air promptly.

Supplemental front air bags, along with the use of seat belts, helps to cushion the impact force on the face and chest of the front occupants. They can help save lives and reduce serious injuries. However, an inflating front air bag may cause facial abrasions or other injuries. Front air bags do not provide restraint to the lower body.

The seat belts should be correctly worn and the driver and passenger seated upright as far as practical away from the steering wheel or instrument panel. The supplemental front air bags inflates quickly in order to help protect the front occupants. Because of this, the force of the front air bag inflating can increase the risk of injury if the occupant is too close to, or is against, the air bag module during inflation. The air bag will deflate quickly after the collision is over.

After turning the ignition key to the ON position, the supplemental air bag warning light illuminates. The supplemental air bag warning light will turn off after about 7 seconds if the system is operational.

WARNING

- **Do not place any objects on the steering wheel pad or on the instrument panel. Also, do not place any objects between any occupant and the steering wheel or instrument panel. Such objects may become dangerous projectiles and cause injury if the supplemental front air bag inflates.**
- **Right after inflation, several air bag system components will be hot. Do not touch them; you may severely burn yourself.**
- **No unauthorized changes should be made to any components or wiring of the supplemental front air bag system. This is to prevent accidental inflation of the air bag or damage to the air bag system.**
- **Do not make unauthorized changes to your vehicle's electrical system, suspension system or front end structure. This could affect proper operation of the supplemental air bag system.**
- **Tampering with the supplemental front air bag system may result in serious personal injury. Tampering includes changes to the steering wheel and the instrument panel assembly by placing material over the steering wheel pad, above the dashboard, or by installing additional trim material around the air bag system.**
- **Work around and on the supplemental front air bag system should be done by a NISSAN dealer. Installation of electrical equipment should also be done by a NISSAN dealer. The yellow and orange Supplemental Restrain System (SRS) wiring and connectors should not be modified or disconnected. Unauthorized electrical test equipment and probing de**

vices should not be used on the air bag system.

- **A cracked windshield should be replaced immediately by a qualified repair facility. A cracked windshield could affect inflation of the supplemental air bag system.**
- **The SRS wiring harness connectors are yellow and orange for easy identification.**

When selling your vehicle, we request that you inform the buyer about the supplemental front air bag system and guide the buyer to the appropriate sections in this Owner's Manual.

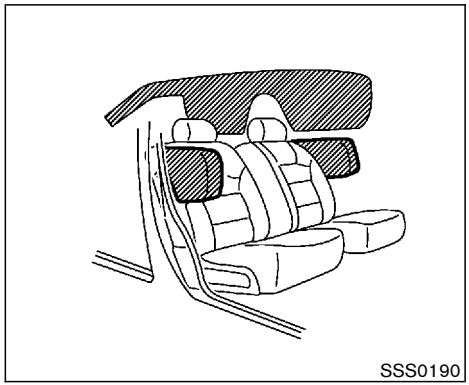

Supplemental side air bag and curtain side-impact air bag systems

The supplemental side air bags are located in the outside of the seatback of the front seats. The supplemental curtain side-impact air bags are located in the side roof rails. These systems are designed to meet voluntary guidelines to help reduce the risk of injury to out-of-position occupants. **However, all of the information, cautions and warnings in this manual still apply and must be followed.** The supplemental side air bags and curtain side-impact air bags are designed to inflate in higher severity side collisions, although they may inflate if the forces in another type of collision are similar to those of a higher severity side impact. They are designed to inflate on the side where the vehicle is impacted. They may not inflate in certain side collisions. Vehicle damage (or lack of it) is not always an indication of proper supplemental side air bag and curtain side-impact air bag operation.

When the supplemental side air bag and curtain side-impact air bag inflate, a fairly loud noise may be heard, followed by release of smoke. This smoke is not harmful and does not indicate a fire. Care should be taken not to inhale it, as it may cause irritation and choking. Those with a history of a breathing condition should get fresh air promptly.

Supplemental side air bags, along with the use of seat belts, help to cushion the impact force on the chest of the front occupants. Curtain side-impact air bags help to cushion the impact force to the head of occupants in the front and rear outboard seating positions. They can help save lives and reduce serious injuries. However, an inflating side air bag and curtain side-impact air bag may cause abrasions or other injuries. Supplemental side air bags and curtain side-impact air bags do not provide restraint to the lower body.

The seat belts should be correctly worn and the driver and passenger seated upright as far as

practical away from the side air bag. Rear seat passengers should be seated as far away as practical from the door finishers and side roof rails. The side air bags and curtain side-impact air bag inflate quickly in order to help protect the front occupants. Because of this, the force of the side air bag and curtain side-impact air bag inflating can increase the risk of injury if the occupant is too close to, or is against, these air bag modules during inflation. The side air bag and curtain side-impact air bag will deflate quickly after the collision is over.

After turning the ignition key to the ON position, the supplemental air bag warning light illuminates. The air bag warning light will turn off after about 7 seconds if the systems are operational.

WARNING

- **Do not place any objects near the seatback of the front seats. Also, do not place any objects (an umbrella, bag, etc.) between the front door finisher and the front seat. Such objects may become dangerous projectiles and cause injury if the side air bag inflates.**
- **Right after inflation, several side air bag and curtain side-impact air bag system components will be hot. Do not touch them; you may severely burn yourself.**
- **No unauthorized changes should be made to any components or wiring of this side air bag and curtain side-impact air bag system. This is to prevent accidental inflation of the side air bag and curtain side-impact air bag or damage to the side air bag and curtain side-impact air bag system.**
- **Do not make unauthorized changes to your vehicle's electrical system, suspension system or side panel. This could affect proper operation of the supplemental side air bag and curtain side-impact air bag system.**
- **Tampering with the supplemental system may result in serious personal injury. For example, do not change the front seat by placing material near the seatback or by installing additional trim material, such as seat covers, around the side air bag.**
- **Work around and on the side air bag and curtain side-impact air bag system should be done by a NISSAN dealer. Installation of electrical equipment should also be done by a NISSAN dealer. The SRS wiring harnesses* should not be modified or disconnected. Unauthorized electrical test equipment and probing devices should not be used on the side air bag system.**

* **The SRS wiring harnesses are covered with yellow and orange insulation either just before the harness connectors or over the complete harness for easy identification.**

When selling your vehicle, we request that you inform the buyer about the side air bag and curtain side-impact air bag system and guide the buyer to the appropriate sections in this Owner's Manual.

Pre-tensioner seat belt system (For front seats)

WARNING

- **The pre-tensioner seat belt cannot be reused after activation. It must be replaced together with the retractor as a unit.**
- **If the vehicle becomes involved in a frontal collision but the pre-tensioner is not activated, be sure to have the pre-tensioner system checked and, if necessary, replaced by your NISSAN dealer.**
- **No unauthorized changes should be made to any components or wiring of the pre-tensioner seat belt system. This is to prevent accidental activation of the pre-tensioner seat belt or damage to the pre-tensioner seat belt operation. Tampering with the pre-tensioner seat belt system may result in serious personal injury.**
- **Work around and on the pretensioner seat belt system should be done by a NISSAN dealer. Installation of electrical equipment should also be done by a NISSAN dealer. Unauthorized electrical test equipment and probing devices should not be used on the pretensioner seat belt system.**
- **If you need to dispose of the pretensioner or scrap the vehicle, contact a NISSAN dealer. Correct pretensioner disposal procedures are set forth in the appropriate NISSAN Service Manual. Incorrect disposal procedures could cause personal injury.**

The front seat pre-tensioner seat belt system activates in conjunction with the supplemental front air bag. Working with the seat belt retractor, it helps tighten the seat belt the instant the vehicle becomes involved in certain types of collisions, thereby restraining seat occupants.

The pre-tensioner is encased with the seat belt's retractor. These seat belts are used the same as conventional seat belts.

When the pre-tensioner seat belt activates, smoke is released and a loud noise may be heard. The smoke is not harmful, but care should be taken not to inhale it as it may cause irritation and choking. Those with a history of a breathing condition should get fresh air promptly.

If any abnormality occurs in the pre-tensioner seat belt system, the supplemental air bag warning light will not come on, will flash intermittently or will turn on for 7 seconds and remain on after the ignition key has been turned to the ON or START position. In this case, the pre-tensioner seat belt may not function properly. They must be checked and repaired. Take your vehicle to the nearest NISSAN dealer.

When selling your vehicle, we request that you inform the buyer about the pre-tensioner seat belt system and guide the buyer to the appropriate sections in this Owner's Manual.

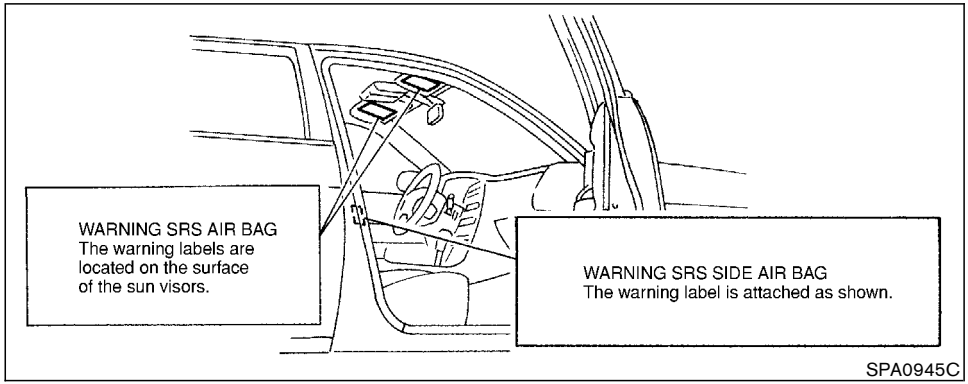

SUPPLEMENTAL AIR BAG WARNING LABELS

Warning labels about the supplemental air bag system are placed in the vehicle as shown in the illustration.

SUPPLEMENTAL AIR BAG WARNING LIGHT

The supplemental air bag warning light, displaying in the instrument panel, monitors the circuits of the supplemental front air bag, supplemental side air bag and curtain side-impact air bag systems, and pre-tensioner seat belt. The circuits monitored by the air bag warning light are the diagnosis sensor unit, satellite sensors, front air bag modules, side air bag modules, curtain side-impact air bag modules, and pre-tensioner seat belt and all related wiring.

After turning the ignition key to the ON position, the supplemental air bag warning light illumi-

nates. The supplemental air bag warning light will turn off after about 7 seconds if the system is operational.

If any of the following conditions occur, the supplemental front air bag, supplemental side air bag and curtain side-impact air bag systems, and pre-tensioner seat belt need servicing:

- The supplemental air bag warning light remains on after approximately 7 seconds.
- The supplemental air bag warning light flashes intermittently.
- The supplemental air bag warning light does not come on at all.

Under these conditions, the supplemental front air bags, supplemental side air bags, curtain side-impact air bags and/or pre-tensioner seat belt may not operate properly. They must be checked and repaired. Take your vehicle to the nearest NISSAN dealer.

WARNING

If the supplemental air bag warning light is on, it could mean that the supplemental front air bag, supplemental side air bag, curtain side-impact air bag systems and/or pre-tensioner seat belt will not operate in an accident.

Repair and replacement procedure

The supplemental front air bags, supplemental side air bags, curtain side-impact air bags and pre-tensioner seat belt are designed to inflate on a one-time-only basis. As a reminder, unless it is damaged, the supplemental air bag warning light will remain illuminated after inflation has occurred. Repair and replacement of these systems should be done only by a NISSAN dealer.

When maintenance work is required on the vehicle, the supplemental front air bags, side air bags, curtain side-impact air bags, related parts and pre-tensioner seat belt should be pointed out to the person conducting the maintenance. The ignition key should always be in the LOCK position when working under the hood or inside the vehicle.

WARNING

- **Once the supplemental front air bag, side air bag or curtain side-impact air bag has inflated, the air bag module will not function again and must be replaced. Additionally, if any of the supplemental front air bags inflate, the activated pre-tensioner seat belt must also be replaced. The air bag module and pre-tensioner seat belt system should be replaced by a NISSAN dealer. The air bag modules and pre-tensioner seat belt system cannot be repaired.**
- **The supplemental front air bag and side air bag, curtain side-impact air bag systems and pre-tensioner seat belt system should be inspected by a NISSAN dealer if there is any damage to the front end or side portion of the vehicle.**
- **If you need to dispose of these supplemental systems or scrap the vehicle, contact a NISSAN dealer. Correct disposal procedures are set forth in the appropriate NISSAN Service Manual. Incorrect disposal procedures could cause personal injury.**

SEAT BELTS

PRECAUTIONS ON SEAT BELT USAGE

Your chances of being injured or killed in an accident and/or the severity of injury may be greatly reduced if you are wearing your seat belt and it is properly adjusted. NISSAN strongly encourages you and all of your passengers to buckle up every time you drive, even if your seating position includes a supplemental air bag.

Most states, provinces or territories require that seat belts be worn at all times when a vehicle is being driven.

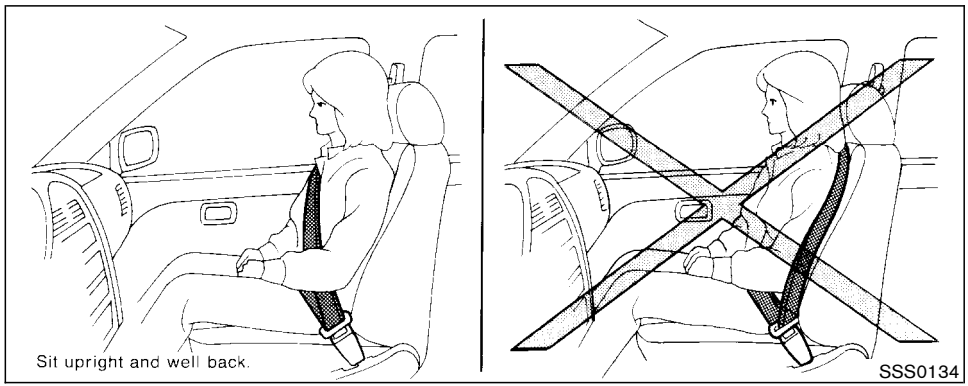

WARNING

- **Every person who drives or rides in this vehicle should use a seat belt at all times. Children should be properly restrained in the rear seat and, if appropriate, in a child restraint.**
- **The belt should be properly adjusted to a snug fit. Failure to do so may reduce the effectiveness of the entire restraint system and increase the chance or severity of injury in an accident. Serious injury or death can occur if the seat belt is not worn properly.**
- **Always route the shoulder belt over your shoulder and across your chest. Never run the belt behind your back under your arm or across your neck. The belt should be away from your face and neck, but not falling off your shoulder.**

- **Position the lap belt as low and snug as possible around the hips, not the waist. A lap belt worn too high could increase the risk of internal injuries in an accident.**
- **Be sure the seat belt tongue is securely fastened to the proper buckle.**
- **Do not wear the belt inside out or twisted. Doing so may reduce its effectiveness.**
- **Do not allow more than one person to use the same belt.**
- **Never carry more people in the vehicle than there are seat belts.**
- **If the seat belt warning light glows continuously while the ignition is turned ON with all doors closed and all seat belts fastened, it may indicate a malfunction in the system. Have the system checked by your NISSAN dealer.**
- **Once the pre-tensioner seat belt has activated, it cannot be reused and must be replaced together with the retractor. See your NISSAN dealer.**

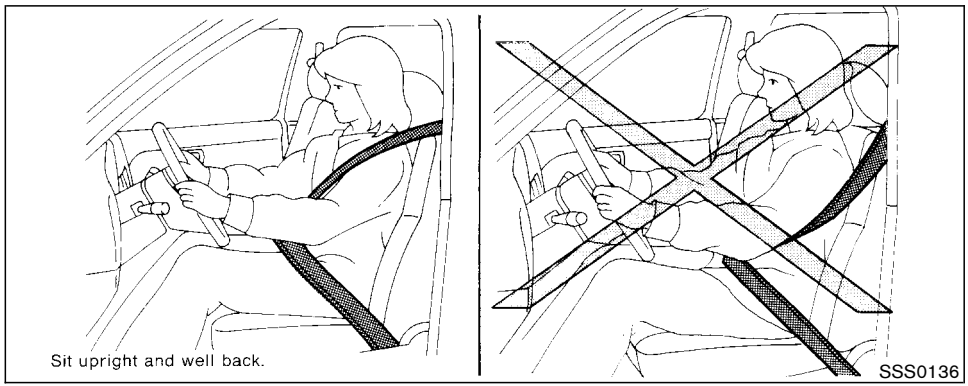

- **Removal and installation of the pre-tensioner seat belt system components should be done by a NISSAN dealer.**
- **All seat belt assemblies including retractors and attaching hardware should be inspected after any collision by your NISSAN dealer. NISSAN recommends that all seat belt assemblies in use during a collision be replaced unless the collision was minor and the belts show no damage and continue to operate properly. Seat belt assemblies not in use during a collision should also be inspected and replaced if either damage or improper operation is noted.**
- **All child restraints and attaching hardware should be inspected after any collision. Always follow the restraint manufacturer's inspection instructions and replacement recommendations. The child restraints should be replaced if they are damaged.**

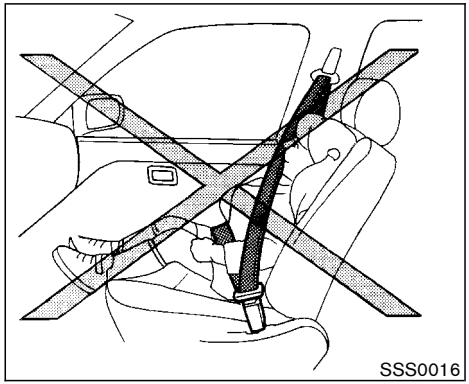

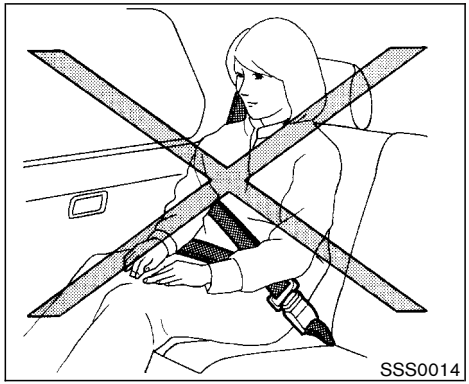

CHILD SAFETY

Children need adults to help protect them. They need to be properly restrained.

The proper restraint depends on the child's size. Generally, infants (up to about 1 year and less than 20 lb (9 kg) should be placed in rear facing child restraints. Front facing child restraints are available for children who outgrow rear facing child restraints.

WARNING

Infants and children need special protection. The vehicle's seat belts may not fit them properly. The shoulder belt may come too close to the face or neck. The lap belt may not fit over their small hip bones. In an accident, an improperly fitting seat belt could cause serious or fatal injury. Always use appropriate child restraints.

All US states and provinces of Canada require the use of approved child restraints for infants and small children. (See "Child restraints" later in this section.)

In addition, there are many types of child restraints available for larger children which should be used for maximum protection.

NISSAN recommends that all preteens and children be restrained in the rear seat if possible. According to accident statistics, children are safer when properly restrained in the rear seat than in the front seat.

This is especially important because your vehicle has a supplemental restraint system (air bag system) for the front passenger (see "Supplemental Restraint System" earlier in this section for precautions).

Infants and small children

NISSAN recommends that infants and small children be placed in child restraints that comply with Federal Motor Vehicle Safety Standards or Canadian Motor Vehicle Safety Standards. You should choose a child restraint that fits your vehicle and always follow the manufacturer's instructions for installation and use.

Larger children

Children who are too large for child restraint systems should be seated and restrained by the seat belts which are provided.

If the child's seating position has a shoulder belt that fits close to the face or neck, the use of a booster seat (commercially available) may help overcome this. The booster seat should raise the child so that the shoulder belt is properly positioned across the top, middle portion of the shoulder and the lap belt is low on the hips. The booster seat should fit the vehicle seat and have a label certifying that it complies with Federal Motor Vehicle Safety Standards or Canadian Motor Vehicle Safety Standards. Once the child has grown so the shoulder belt is no longer on or near the face and neck, use the shoulder belt without the booster seat.

WARNING

Never let a child stand or kneel on any seat and do not allow a child in the cargo areas while the vehicle is moving. The child could be seriously injured or killed in an accident or a sudden stop.

PREGNANT WOMEN

NISSAN recommends that pregnant women use seat belts. The seat belt should be worn snug, and always position the lap belt as low as possible around the hips, not the waist. Place the shoulder belt over your shoulder and across your chest. Never run the lap/shoulder belt over your abdominal area. Contact your doctor for specific recommendations.

INJURED PERSONS

NISSAN recommends that injured persons use seat belts, depending on the injury. Check with your doctor for specific recommendations.

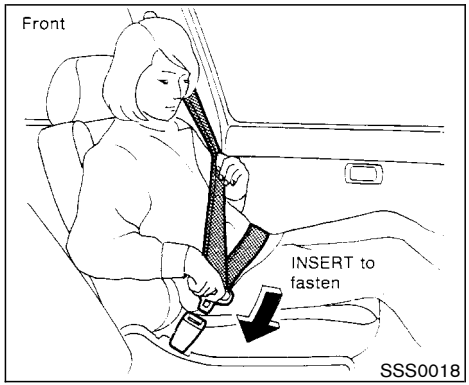

THREE-POINT TYPE SEAT BELT WITH RETRACTOR

WARNING

- **Every person who drives or rides in this vehicle should use a seat belt at all times.**
- **Do not ride in a moving vehicle when the seatback is reclined. This can be dangerous. The shoulder belt will not be against your body. In an accident**

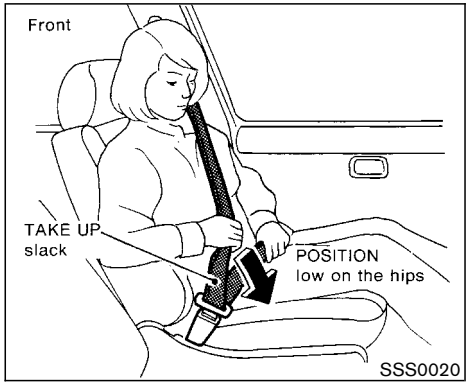

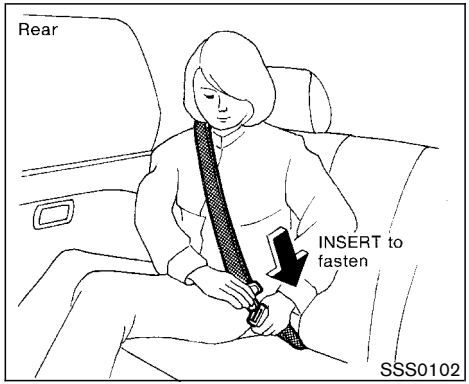

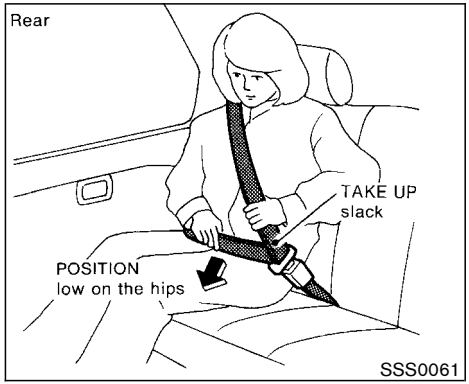

you could be thrown into it and receive neck or other serious injuries. You could also slide under the lap belt and receive serious internal injuries.

- **For most effective protection when the vehicle is in motion, the seat should be upright. Always sit well back in the seat and adjust the seat belt properly.**

Fastening the seat belts

1. Adjust the seat.
2. Slowly pull the seat belt out of the retractor and insert the tongue into the buckle until it snaps. For additional information regarding the rear center seat belt, see “Rear center seat belt” later in this section.

The retractor is designed to lock during a sudden stop or on impact. A slow pulling motion will permit the belt to move, and allow you some freedom of movement in the seat.

3. Position the lap belt portion **low and snug on the hips** as shown.
4. Pull the shoulder belt portion toward the retractor to take up extra slack.

The front passenger and rear seat belts have a cinching mechanism for child restraint installation. It is referred to as the automatic locking mode.

When the cinching mechanism is activated the seat belt cannot be withdrawn again until the seat belt tongue is detached from the buckle and fully retracted. For additional information, see “Child restraints” later in this section.

The automatic locking mode should be used only for child restraint installation. During normal seat belt use by a passenger, the locking mode should not be activated. If it is activated it may cause uncomfortable seat belt tension.

WARNING

- **When fastening the seat belts, be certain that seatbacks are completely secured in the latched position. If they are not completely secured in the right position, passengers may be injured in an accident or sudden stop.**
- **When attaching the rear center seat belt connector, be certain that the seatbacks are completely secured in the latched position and the rear center seat belt connector is completely secured.**
- **If the rear center seat belt connector and the seatbacks are not secured in the correct position, serious personal injury may result in an accident or sudden stop.**

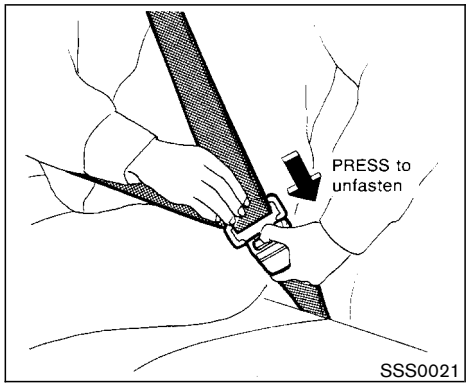

Unfastening the seat belts

To unfasten the belt, press the button on the buckle. The seat belt will automatically retract.

Checking seat belt operation

Your seat belt retractors are designed to lock belt movement using two separate methods:

- when the belt is pulled quickly from the retractor.
- when the vehicle slows down rapidly.

You can check their operation as follows:

- grasp the shoulder belt and pull quickly forward. The retractor should lock and restrict further belt movement.

If the retractor does not lock during this check or if you have any questions about belt operation, see your NISSAN dealer.

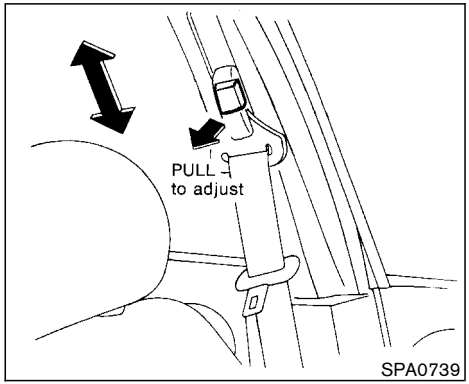

Shoulder belt height adjustment (Except for rear center seat)

The shoulder belt anchor height should be adjusted to the position best suited for you. (See “Precautions on seat belt usage” earlier in this section.) To lower, pull the release button, and then move the shoulder belt anchor to the desired position, so that the belt passes over the shoulder. Release the adjustment button to lock the shoulder belt anchor into position.

To raise, move the adjuster up to the desired position without pushing the button.

WARNING

- **After adjustment, release the adjustment button and try to move the shoulder belt down to make sure it is securely fixed in position.**
- **The shoulder belt anchor height should be adjusted to the position best for you. Failure to do so may reduce the effectiveness of the entire restraint system and increase the chance or severity of injury in an accident.**

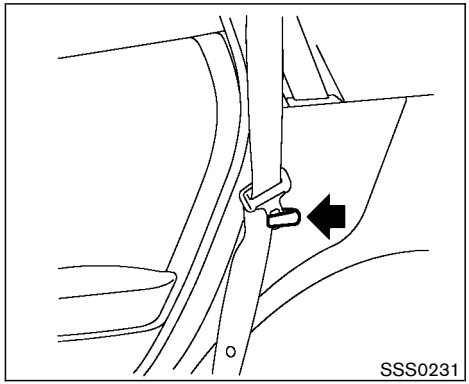

Seat belt hook

When folding down the rear seat, hook the rear seat belt at the belt hook.

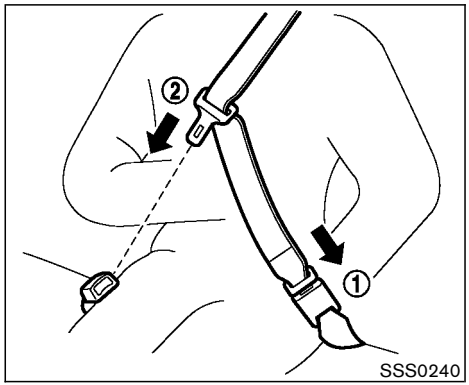

REAR CENTER SEAT BELT

The rear center seat belt has a connector tongue ① and a seat belt tongue ②. Both the connector tongue and the seat belt tongue must be securely latched for proper seat belt operation.

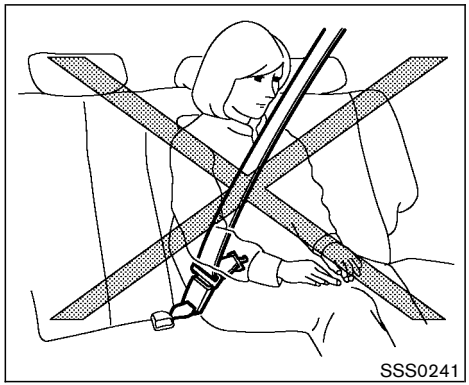

WARNING

- **Always fasten the connector tongue and the seat belt in the order shown.**
- **Always make sure both the connector tongue and the seat belt tongue are secured when using the seat belt. Do not use it with only the seat belt tongue attached. This could result in serious personal injury in case of an accident or a sudden stop.**

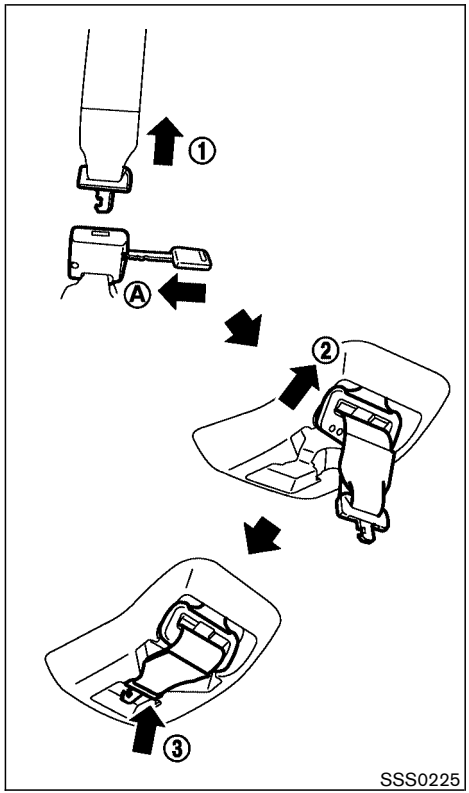

Stowing rear center seat belt

When folding down the rear seat, the rear center seat belt can be retracted into a stowed position as follows:

1. Release the connector tongue ① by inserting a suitable tool such as key into the connector buckle Ⓐ.
2. Secure the seat belt tongue into the retractor base first ②.
3. Then secure the connector tongue into the retractor base ③.

WARNING

- **Do not unfasten the rear center seat belt connector except when folding down the rear seat.**
- **When attaching the rear center seat belt connector, be certain that the seatbacks are completely secured in the latched position and the rear center seat belt connector is completely secured.**
- **If the rear center seat belt connector and the seatbacks are not secured in the correct position, serious personal injury may result in an accident or sudden stop.**

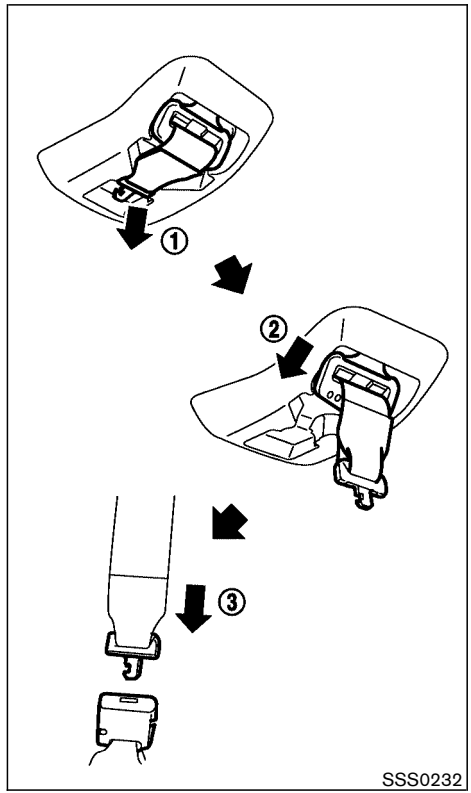

Attaching rear center seat belt

Always be sure the rear center seat belt connector tongue and connector buckle are attached. Disconnect only when folding down the rear seat.

To connect the buckle:

1. Pull out the connector tongue from the retractor base (1).
2. Pull out the seat belt tongue from the retractor base (2).
3. Pull the seat belt and secure the connector buckle until it clicks (3).

The center seat belt connector tongue and buckle are indicated by the "▼" and "▲" mark.

The center seat belt connector tongue can be attached only into the rear center seat belt connector buckle.

To fasten the seat belt, see "Fastening the seat belt" earlier in this section.

WARNING

- **Do not unfasten the rear center seat belt connector except when folding down the rear seat.**
- **When attaching the rear center seat belt connector, be certain that the seatbacks are completely secured in the latched position and the rear center seat belt connector is completely secured.**
- **If the rear center seat belt connector and the seatbacks are not secured in the correct position, serious personal injury may result in an accident or sudden stop.**

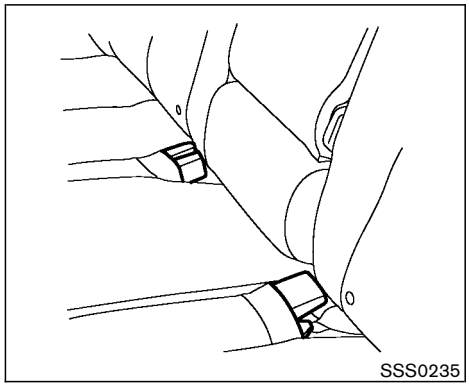

Storing rear seat belt buckles

Before folding down the seat, put the buckles in the storage of the seat cushion to avoid dropping it under the seat cushion.

SEAT BELT EXTENDERS

If, because of body size or driving position, it is not possible to properly fit the lap-shoulder belt and fasten it, an extender is available which is compatible with the installed seat belts. The extender adds approximately 8 inches (200 mm) of length and may be used for either the driver or front passenger seating position. See your

NISSAN dealer for assistance if the extender is required.

WARNING

- **Only NISSAN belt extenders, made by the same company which made the original equipment belts, should be used with NISSAN belts.**
- **Adults and children who can use the standard seat belt should not use an extender. Such unnecessary use could result in serious personal injury in the event of an accident.**
- **Never use seat belt extenders to install child restraints. If the child restraint is not secured properly, the child could be seriously injured in a collision or a sudden stop.**

SEAT BELT MAINTENANCE

- **To clean the seat belt webbings,** apply a mild soap solution or any solution recommended for cleaning upholstery or carpets. Then brush the webbing, wipe it with a cloth and allow it to dry in the shade. Do not allow the seat belts to retract until they are completely dry.
- If dirt builds up in the shoulder belt guide of the seat belt anchors, the seat belts may retract slowly. Wipe the shoulder belt guide with a clean, dry cloth.
- **Periodically check to see that the seat belt and the metal components** such as buckles, tongues, retractors, flexible wires and anchors work properly. If loose parts, deterioration, cuts or other damage on the webbing is found, the entire belt assembly should be replaced.

CHILD RESTRAINTS

PRECAUTIONS ON CHILD RESTRAINTS

WARNING

- **Infants and small children should always be placed in an appropriate child restraint while riding in the vehicle. Failure to use a child restraint can result in serious injury or death.**
- **Infants and small children should never be carried on your lap. It is not possible for even the strongest adult to resist the forces of a severe accident. The child could be crushed between the adult and parts of the vehicle. Also, do not put the same seat belt around both your child and yourself.**
- **Never install a rear facing child restraint in the front seat. An inflating supplemental air bag could seriously injure or kill your child. A rear facing child restraint must only be used in the rear seat.**

- **NISSAN recommends that the child restraint be installed in the rear seat. According to accident statistics, children are safer when properly restrained in the rear seat than in the front seat.**
- **An improperly installed child restraint could lead to serious injury or death in an accident.**

In general, child restraints are designed to be installed with the lap portion of a three-point type seat belt. In addition, this vehicle is equipped with a universal child restraint lower anchor system, referred to as the LATCH (Lower Anchors and Tether for Children) system. Some child restraints include two rigid or webbing-mounted attachments that can be connected to these lower anchors. For details, see "LATCH (Lower Anchors and Tether for Children) SYSTEM" later in this section.

Child restraints for infants and children of various sizes are offered by several manufacturers. When selecting any child restraint, keep the following points in mind:

- choose only a restraint with a label certifying that it complies with Federal Motor Vehicle Safety Standard 213 or Canadian Motor Vehicle Safety Standard 213.
- check the child restraint in your vehicle to be sure it is compatible with the vehicle's seat and seat belt system.
- if the child restraint is compatible with your vehicle, place your child in the child restraint and check the various adjustments to be sure the child restraint is compatible with your child. Always follow all recommended procedures.

All US states and Canadian provinces require that infants and small children be restrained in approved child restraints at all times while the vehicle is being operated.

WARNING

- **Improper use of a child restraint can result in increased injuries for both the infant or child and other occupants in the vehicle.**
- **Follow all of the child restraint manufacturer's instructions for installation and use. When purchasing a child restraint, be sure to select one which will fit your child and vehicle. It may not be possible to properly install some types of child restraints in your vehicle.**
- **If the child restraint is not anchored properly, the risk of a child being injured in a collision or a sudden stop greatly increases.**
- **Adjustable seatbacks should be positioned to fit the child restraint, but as upright as possible.**
- **After attaching the child restraint, test it before you place the child in it. Tilt it from side to side. Try to tug it forward and check to see if the belt holds the restraint in place. If the restraint is not secure, tighten the belt as necessary, or put the restraint in another seat and test it again.**
- **For a front facing child restraint, check to make sure the shoulder belt does not go in front of the child's face or neck. If it does, put the shoulder belt behind the child restraint. If you**

must install a front facing child restraint in the front seat, see instructions later in this section.

- **When your child restraint is not in use, store it in the trunk or keep it secured with a seat belt to prevent it from being thrown around in case of a sudden stop or accident.**

CAUTION

Remember that a child restraint left in a closed vehicle can become very hot. Check the seating surface and buckles before placing your child in the child restraint.

INSTALLATION ON REAR SEAT CENTER OR OUTBOARD POSITIONS

WARNING

- **The three-point rear seat belts on your vehicle are equipped with a locking mode retractor which must be used when installing a child restraint.**
- **Failure to do so will result in the child restraint not being properly secured. It could tip over or otherwise be unsecured and cause injury to the child in a sudden stop or collision.**
- **When installing a child restraint system in the rear center position, both the center seat belt connector tongue and buckle tongue must be secured. See "Attaching rear center seat belt" earlier in this section.**

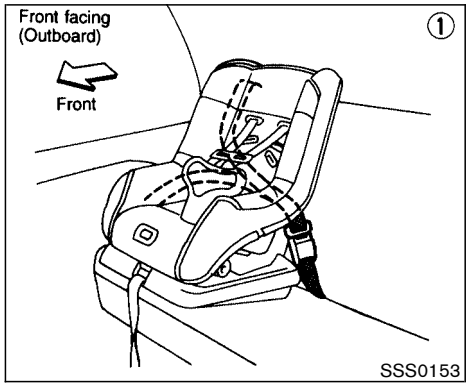

Front facing

When you install a child restraint in a rear outboard or center seat, follow these steps:

1. Position the child restraint on the seat. It can be placed in a front facing direction, depending on the size of the child. Always follow the restraint manufacturer's instructions.

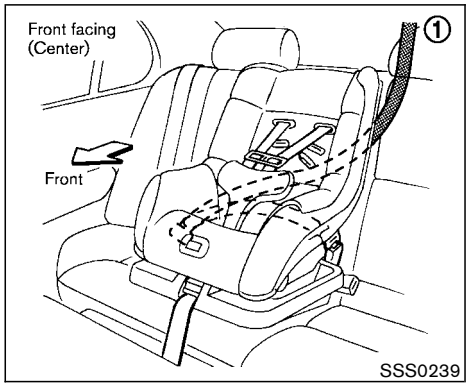

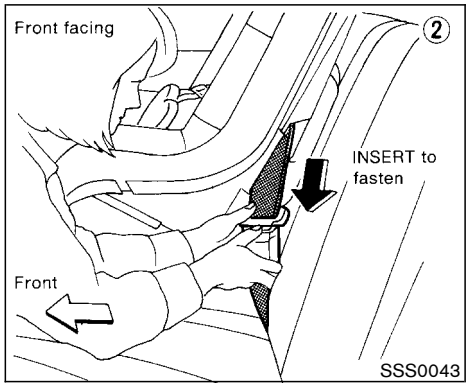

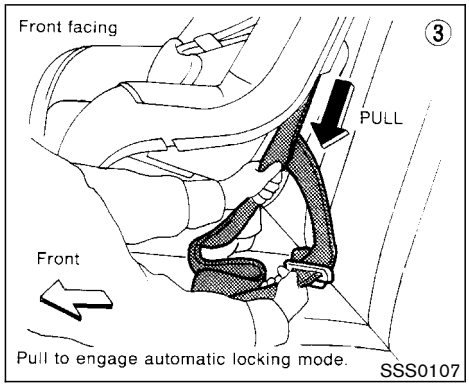

2. Route the seat belt tongue through the child restraint and insert it into the buckle until you hear and feel the latch engage.
   Be sure to follow the child restraint manufacturer's instructions for belt routing.
3. Pull on the shoulder belt until all of the belt is fully extended. At this time, the belt retractor is in the automatic locking mode (child restraint mode). It reverts back to emergency locking mode when the belt is fully retracted.

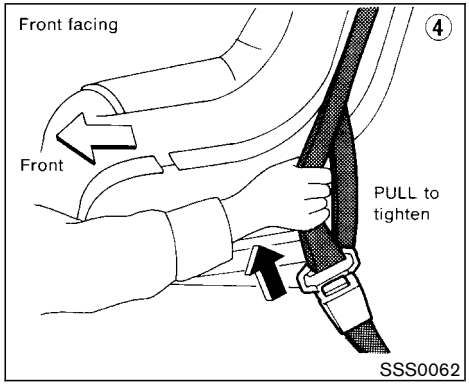

4. Allow the belt to retract. Pull up on the belt to remove any slack in the belt.

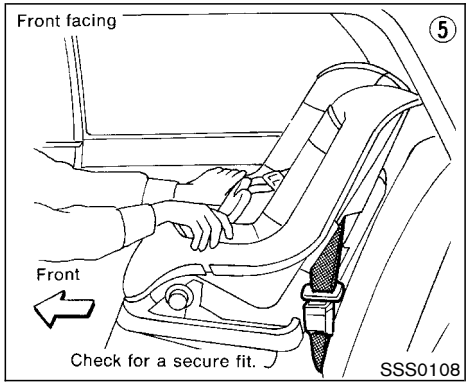

5. Before placing the child in the child restraint, use force to tilt the child restraint from side to side, and tug it forward to make sure that it is securely held in place.
6. Check that the retractor is in the automatic locking mode by trying to pull more belt out of the retractor. If you cannot pull any more belt webbing out of the retractor, the belt is in the automatic locking mode.
7. Check to make sure that the child restraint is properly secured prior to each use. If the belt is not locked, repeat steps 3 through 6.

After the child restraint is removed and the seat belt is allowed to wind back into the retractor, the automatic locking mode (child restraint mode) is canceled; the seat belt only locks during a sudden stop or impact.

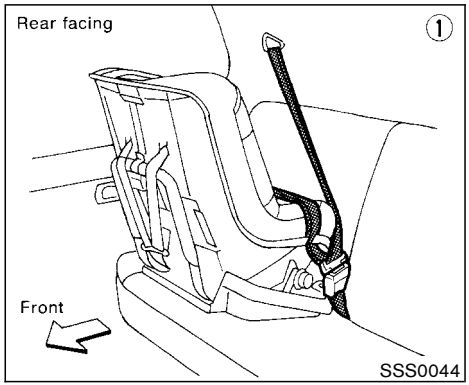

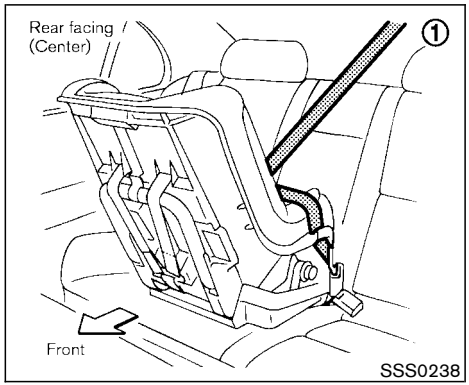

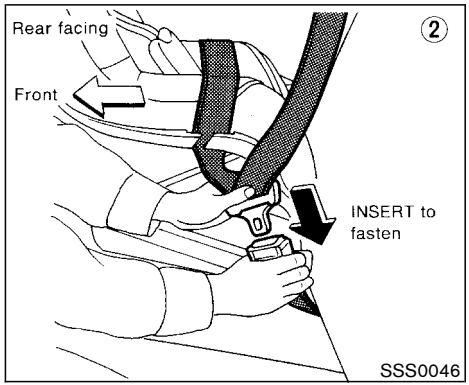

Rear facing

When you install a child restraint in a rear outboard or center seat, follow these steps:

1. Position the child restraint on the seat. The direction of the child restraint depends on the type of the child restraint and the size of the child. Always follow the restraint manufacturer's instructions.
2. Route the seat belt tongue through the child restraint and insert it into the buckle until you hear and feel the latch engage.
   Be sure to follow the child restraint manufacturer's instructions for belt routing.

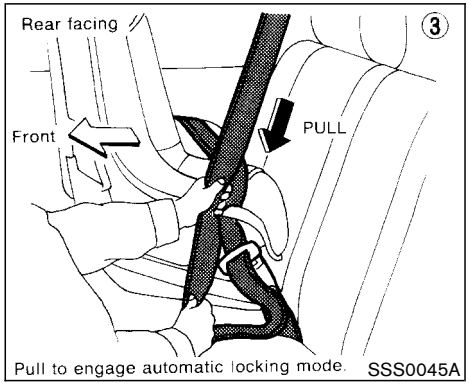

3. Pull on the shoulder belt until all of the belt is fully extended. At this time, the belt retractor is in the automatic locking mode (child restraint mode). It reverts back to emergency locking mode when the belt is fully retracted.

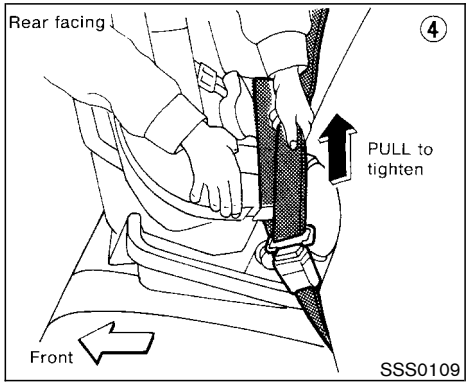

4. Allow the belt to retract. Pull up on the belt to remove any slack in the belt.

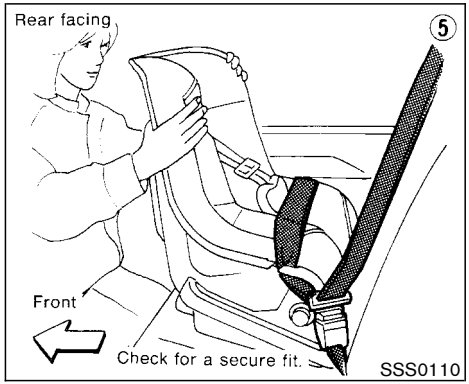

5. Before placing the child in the child restraint, use force to tilt the child restraint from side to side, and tug it forward to make sure that it is securely held in place.
6. Check that the retractor is in the automatic locking mode by trying to pull more belt out of the retractor. If you cannot pull any more belt webbing out of the retractor, the belt is in the automatic locking mode.
7. Check to make sure that the child restraint is properly secured prior to each use. If the belt is not locked, repeat steps 3 through 6.

After the child restraint is removed and the seat belt is allowed to wind back into the retractor,

the automatic locking mode (child restraint mode) is canceled; the seat belt only locks during a sudden stop or impact.

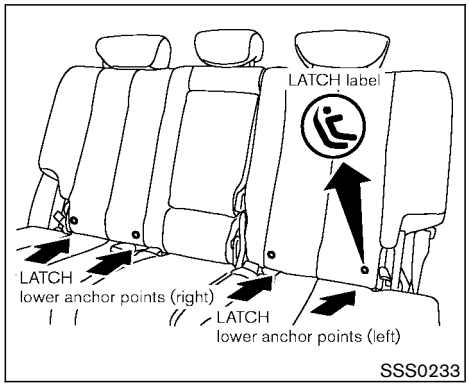

LATCH (LOWER ANCHORS AND TETHER FOR CHILDREN) SYSTEM

WARNING

- **Attach LATCH system compatible child restraints only at the locations shown. If a child restraint is not secured properly, your child could be seriously injured or killed in an accident.**
- **Do not secure a child restraint in the center rear seating position using the child restraint lower anchors. The child restraint will not be secured properly.**
- **The LATCH system anchors are designed to withstand only those loads imposed by correctly fitted child restraints. Under no circumstance are they to be used for adult seat belts or harnesses.**

Some child restraints include two rigid or webbing-mounted attachments that can be connected to two anchors located at certain seating positions in your vehicle. This system is known as the LATCH (Lower Anchors and Tether for Children) system. This system may also be referred to as the ISOFIX or ISOFIX compatible system. With this system, you do not have to use a vehicle seat belt to secure the child restraint. Your vehicle is equipped with special anchor points that are used with LATCH system compatible child restraints. Check your child restraint for a label stating that it is compatible with the LATCH system. This information may also be in the child restraint owner's manual. If you have such a child restraint, refer to the illustration for

the seating positions equipped with LATCH system anchors which can be used to secure the child restraint.

The LATCH system anchors are located at the rear of the seat cushion near the seatback. A label is attached to the seatback to help you locate the LATCH system anchors.

Some child restraints may also require the use of a top tether strap. See “Top tether strap child restraint” later in this section for installation instructions.

When installing a child restraint, carefully read and follow the instructions in this manual and those supplied with the child restraint.

When you install a LATCH system compatible child restraint to the lower anchor attachments, follow these steps.

WARNING

Inspect the lower anchors by inserting your fingers into the lower anchor area and feeling to make sure there are no obstructions over the LATCH system anchors, such as seat belt webbing or seat cushion material. The child restraint will not be secured properly if the LATCH system anchors are obstructed.

1. **To install the LATCH system compatible child restraint, insert the child restraint LATCH system anchor attachments into the anchor points on the rear. If the child restraint is equipped with a top tether, see “Top tether strap child restraint” later in this section for installation instructions.**
2. **After attaching the child restraint and before placing the child in it, use force to tilt the child restraint from side to side and tug it forward to make sure that the child restraint is securely held in place.**
3. **Check to make sure that the child restraint is properly secured prior to each use.**

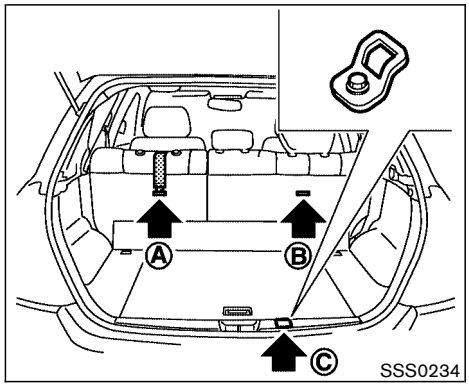

TOP TETHER STRAP CHILD RESTRAINT

WARNING

- **The child restraint anchor points are designed to withstand only those loads imposed by correctly fitted child restraints. Under no circumstances are they to be used for adult seat belts or harnesses.**

- **After removing a rear seat head restraint for top tether installation, store it securely to prevent it from causing injury to passengers or damage to the vehicle in case of sudden braking or an accident. Always replace it and adjust properly when top tether is no longer in use.**
- **The top tether strap may be damaged by contact with the tonneau cover or items in the cargo area. Remove the tonneau cover from the vehicle or secure it and any cargo. Your child could be seriously injured or killed in a collision if the top tether strap is damaged.**

If your child restraint has a top tether strap, it must be secured to the anchor point provided behind its position.

First, adjust the seatback so that it is upright. Then secure the child restraint with the rear seat belt or the LATCH system (outboard positions), as applicable. For the center position Ⓒ, remove the anchor cover from the anchor point as illustrated. Keep the removed cover in a secure place to prevent loss or damage.

Remove the head restraint from the seatback. Store it in a secure place. Position the top tether strap over the top of the seatback and secure it to the tether anchor bracket that provides the straightest installation. Tighten the tether strap according to the manufacturer's instruction to remove any slack.

For best child restraint fit, see the child restraint installation instructions in this section and the child restraint manufacturer's instructions.

Anchor point locations

WARNING

The anchor bolt should be installed at all times to prevent the possibility of exhaust fumes entering the passenger compartment through the holes. See "Precautions when starting and driving" in the "5. Starting and driving" section for exhaust gas.

Anchor points are located as illustrated.

Ⓐ : for rear left side seat position

Ⓑ : for rear right side seat position

Ⓒ : for rear center seat position

If you have any questions when installing a top strap child restraint on the rear seat, consult your NISSAN dealer for details.

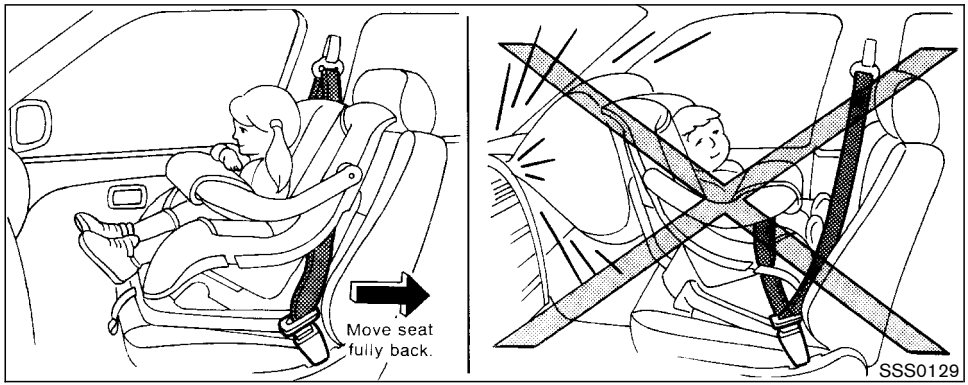

INSTALLATION ON FRONT PASSENGER SEAT

WARNING

- **Never install a rear facing child restraint in the front passenger seat. Supplemental air bags inflate with great force. A rear facing child restraint could be struck by the supplemental air bag in a crash and could seriously injure or kill your child.**
- **NISSAN recommends that child restraints be installed in the rear seat. However, if you must install a front facing child restraint in the front passenger seat, move the passenger seat to the rearmost position.**
- **A child restraint with a top tether strap should not be used in the front passenger seat.**
- **The three-point belt in your vehicle is equipped with a locking mode retractor which must be used when installing a child restraint.**
- **Failure to use the retractor's locking mode will result in the child restraint not being properly secured. The child restraint could tip over or otherwise be unsecured and cause injury to the child in a sudden stop or collision.**

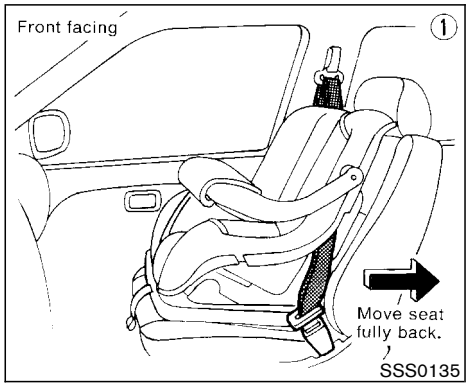

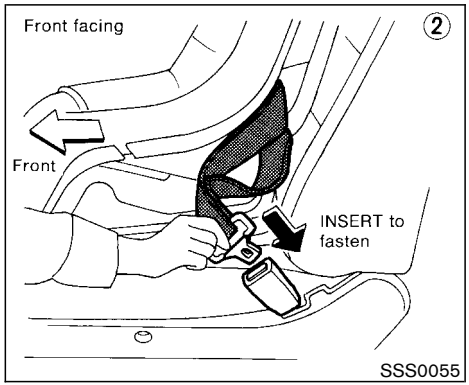

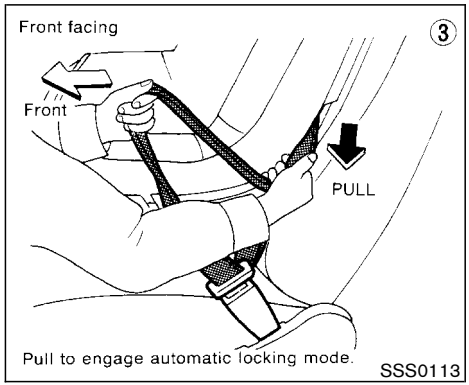

Front facing

If you must install a child restraint in the front seat, follow these steps:

1. Position the child restraint on the front passenger seat. **It should be placed in a front facing direction only.** Move the seat to the rearmost position. Always follow the child restraint manufacturer's instructions. **Child restraints for infants must be used in the rear facing direction and therefore must not be used in the front seat.**
2. Route the seat belt tongue through the child restraint and insert it into the buckle until you hear and feel the latch engage. Be sure to follow the child restraint manufacturer's instructions for belt routing.
3. Pull on the shoulder belt until all of the belt is fully extended. At this time, the belt retractor is in the automatic locking mode (child restraint mode). It reverts back to emergency locking mode when the belt is fully retracted.

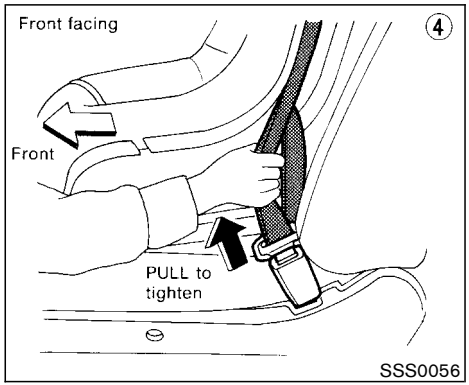

4. Allow the belt to retract. Pull up on the belt to remove any slack in the belt.

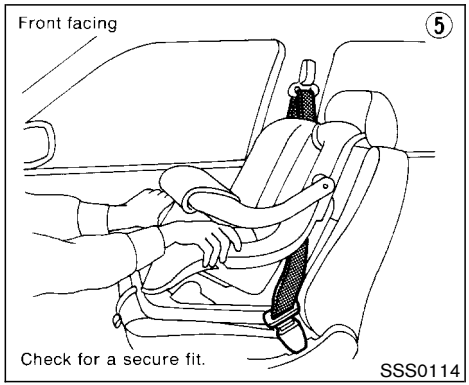

5. Before placing the child in the child restraint, use force to tilt the child restraint from side to side, and tug it forward to make sure that it is securely held in place.
6. Check that the retractor is in the automatic locking mode by trying to pull more belt out of the retractor. If you cannot pull any more belt webbing out of the retractor, the belt is in the automatic locking mode.
7. Check to make sure that the child restraint is properly secured prior to each use. If the lap belt is not locked, repeat steps 3 through 6.

After the child restraint is removed and the seat belt is allowed to wind back into the retractor, the automatic locking mode (child restraint mode) is canceled; the seat belt only locks during a sudden stop or impact.

MEMO

2 Instruments and controls

Instrument panel 2-2
Meters and gauges 2-3
Speedometer and odometer 2-4
Tachometer 2-4
Engine coolant temperature gauge 2-5
Fuel gauge 2-5
Compass display (if so equipped) 2-6
Warning/indicator lights and audible reminders 2-9
Checking bulbs 2-9
Warning lights 2-9
Indicator lights 2-13
Audible reminders 2-15
Security systems 2-15
Vehicle security system 2-15
Nissan Vehicle Immobilizer System 2-16
Windshield wiper and washer switch 2-18
Rear window wiper and washer switch 2-18
Rear window and outside mirror defroster switch 2-19
Headlight and turn signal switch 2-19
Xenon headlights (if so equipped) 2-19
Headlight switch 2-20
Daytime running light system (Canada only) 2-23
Instrument brightness control 2-23
Turn signal switch 2-24
Fog light switch (if so equipped) 2-24
Hazard warning flasher switch 2-24
Horn 2-25
Heated seats (if so equipped) 2-25
Vehicle dynamic control (VDC) off switch (if so equipped) 2-26
Power outlet 2-27
Storage 2-28
Coin box 2-28
Cellular phone holder 2-28
Cup holders 2-29
Glove box 2-30
Console box 2-31
Cargo net (if so equipped) 2-32
Tonneau cover (if so equipped) 2-32
Windows 2-33
Power windows 2-33
Sunroof (if so equipped) 2-35
Automatic sunroof 2-35
Interior lights 2-37
Ceiling 2-37
Map 2-38
Rear 2-38
Luggage 2-39

Vanity mirror light (if so equipped) 2-39
HomeLink® Universal Transceiver (if so equipped).... 2-39
Programming HomeLink® 2-40
Programming HomeLink® for Canadian customers 2-41
Operating the HomeLink® Universal Transceiver 2-42
Programming trouble diagnosis 2-42
Clearing the programmed information..... 2-42
Reprogramming a single HomeLink® button..... 2-42
If your vehicle is stolen..... 2-42

INSTRUMENT PANEL

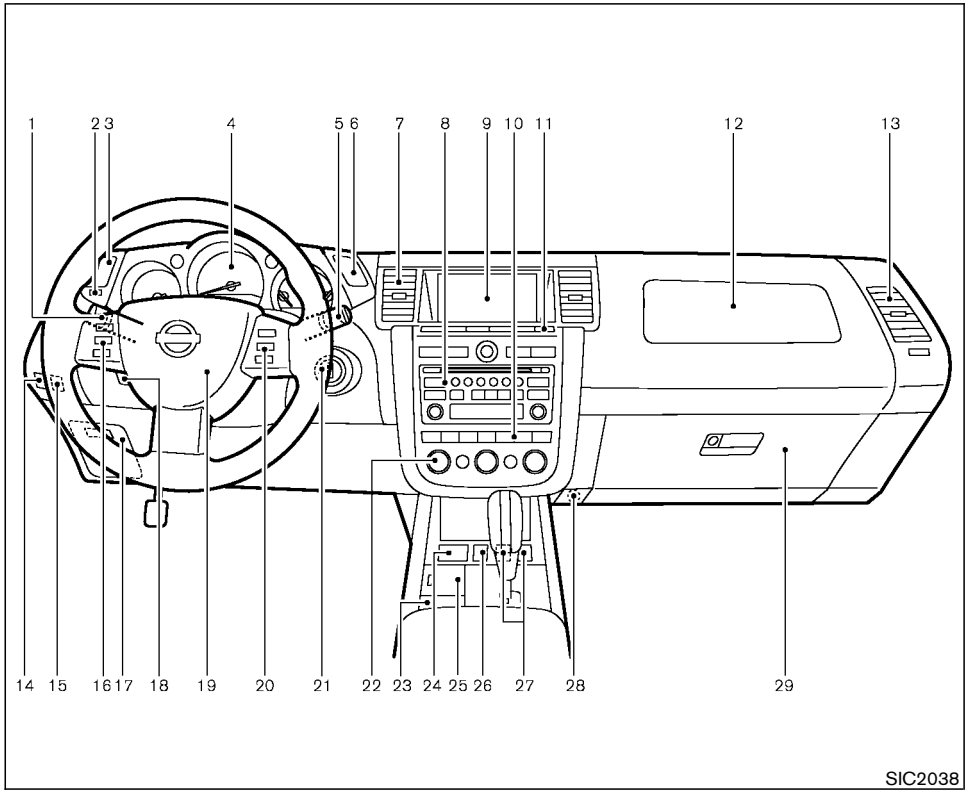

1. Headlight, fog light (if so equipped) and turn signal switch (P.2-19)
2. Trip odometer reset button (P.2-4)
3. Instrument brightness control switch (P.2-23)
4. Meters/gauges (P.2-3)
5. Windshield (P.2-18)/rear window (P.2-18) wiper and washer switch
6. Hazard warning flasher switch (P.2-24)
7. Center ventilator (P.4-14)
8. Audio control (P.4-19)
9. Display/clock (P.4-4)
10. Rear window defroster and Heated outside mirror (if so equipped) switch (P.2-19)
11. Display screen control and/or Navigation system* (P.4-2)
12. Passenger supplemental air bag (P.1-9)
13. Side ventilator (P.4-14)
14. Headlight aiming control switch (P.2-22)
15. VDC (Vehicle dynamic control) off switch (P.2-26)
16. Steering switch for audio control (P.4-30)
17. Fuse box cover (P.8-22)
18. Tilting steering wheel lock lever (P.3-13)
19. Driver supplemental air bag (P.1-9)/Horn (P.2-25)
20. Cruise control main/set switch (P.5-14)
21. Ignition switch/steering lock (P.5-8)
22. Heater/air conditioner control (P.4-15)
23. Coin box (P.2-28)
24. Outside mirror remote control (P.3-15)
25. Cellular phone holder (P.2-28)
26. AWD lock switch (AWD models) (P.5-18)
27. Heated seat switch (P.2-25)
28. Power outlet cover (P.2-27)

29. Glove box (P.2-30)

See the page indicated in parentheses for operating details.

*: Refer to the separate Navigation System Owner's Manual.

METERS AND GAUGES

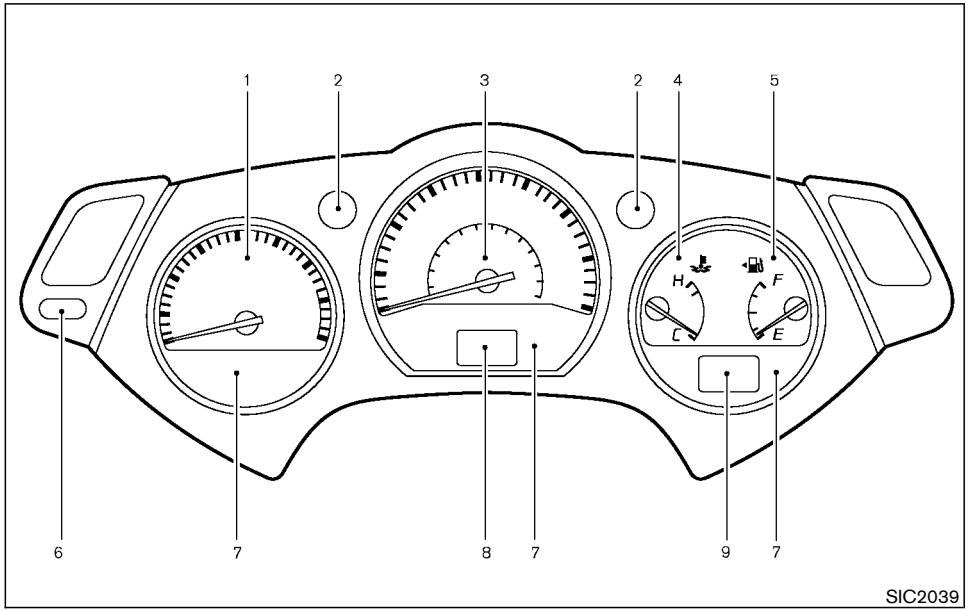

1. Tachometer
2. Turn signal indicator/Hazard indicator
3. Speedometer
4. Engine coolant temperature gauge
5. Fuel gauge
6. Reset button for trip odometer
7. Warning/Indicator lights
8. Odometer (Total/Twin trip)
9. CVT shift position indicator

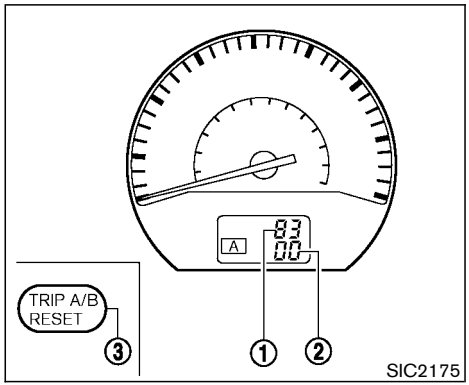

SPEEDOMETER AND ODOMETER

Speedometer

The speedometer indicates vehicle speed.

Odometer/Twin trip odometer

The odometer ①/twin trip odometer ② are displayed when the ignition key is in the ON position.

The odometer records the total distance the vehicle has been driven.

The twin trip odometer records the distance of individual trips.

Changing the display:

Pushing the reset button ③ located on the side of the meter panel changes the display as follows:

TRIP A → TRIP B → TRIP A

Resetting the trip odometer:

Pushing the reset button for more than 1 second resets the trip odometer to zero.

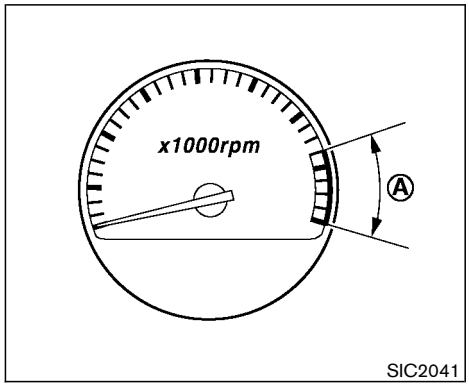

TACHOMETER

The tachometer indicates engine speed in revolutions per minute (r/min).

Do not rev engine into red zone Ⓐ.

CAUTION

When engine speed approaches the red zone, shift to a higher gear. Operating the engine in the red zone may cause serious engine damage.

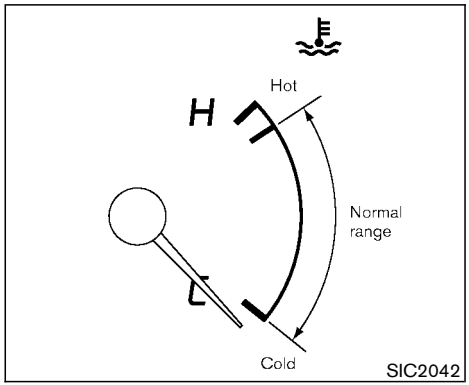

ENGINE COOLANT TEMPERATURE GAUGE

The gauge indicates the engine coolant temperature.

The engine coolant temperature will vary with the outside air temperature and driving conditions.

CAUTION

If the gauge indicates engine coolant temperature over the normal range, stop the vehicle as soon as safely possible. If the engine is overheated, continued operation of the vehicle may seriously damage the engine. See "If your vehicle overheats" in the "6. In case of emergency" section for immediate action required.

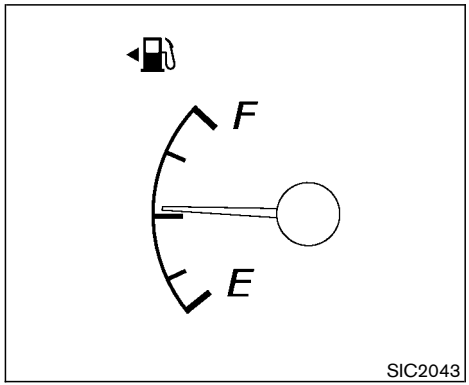

FUEL GAUGE

The gauge indicates the approximate fuel level in the tank.

The gauge may move slightly during braking, turning, acceleration, or going up or down hill.

The gauge needle is designed to move to the E (Empty) position when the ignition key is turned to the OFF position.

Refill the fuel tank before the gauge registers Empty.

The low fuel warning light comes on when the fuel tank is getting low. Refuel as soon as it is convenient, preferably before the gauge reaches E. There will be a small reserve of fuel in the tank when the fuel gauge needle reaches E.

The ◄⛽ indicates that the fuel filler lid is located on the driver's side of the vehicle.

⚠ CAUTION

- **If the vehicle runs out of fuel, the SERVICE ENGINE SOON malfunction indicator lamp (MIL) may come on. Refuel as soon as possible. After a few driving trips, the SERVICE ENGINE SOON lamp should turn off. If the lamp remains on after a few driving trips, have the vehicle inspected by a NISSAN dealer.**
- **For additional information, see the "Malfunction indicator lamp (MIL)" later in this section.**

COMPASS DISPLAY (if so equipped)

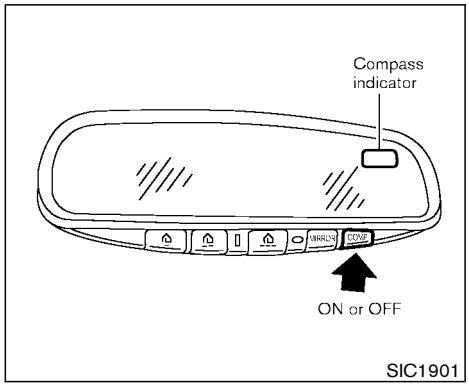

When the COMPASS switch is in the ON position, the compass display will indicate the direction the vehicle is heading.

N: north
E: east
S: south
W: west

If the display reads "C", calibrate the compass by driving the vehicle in 3 complete circles at less than 5 MPH (8 km/h).

You can also calibrate the compass by driving your vehicle on your everyday route. The compass will be calibrated once it has tracked 3 complete circles.

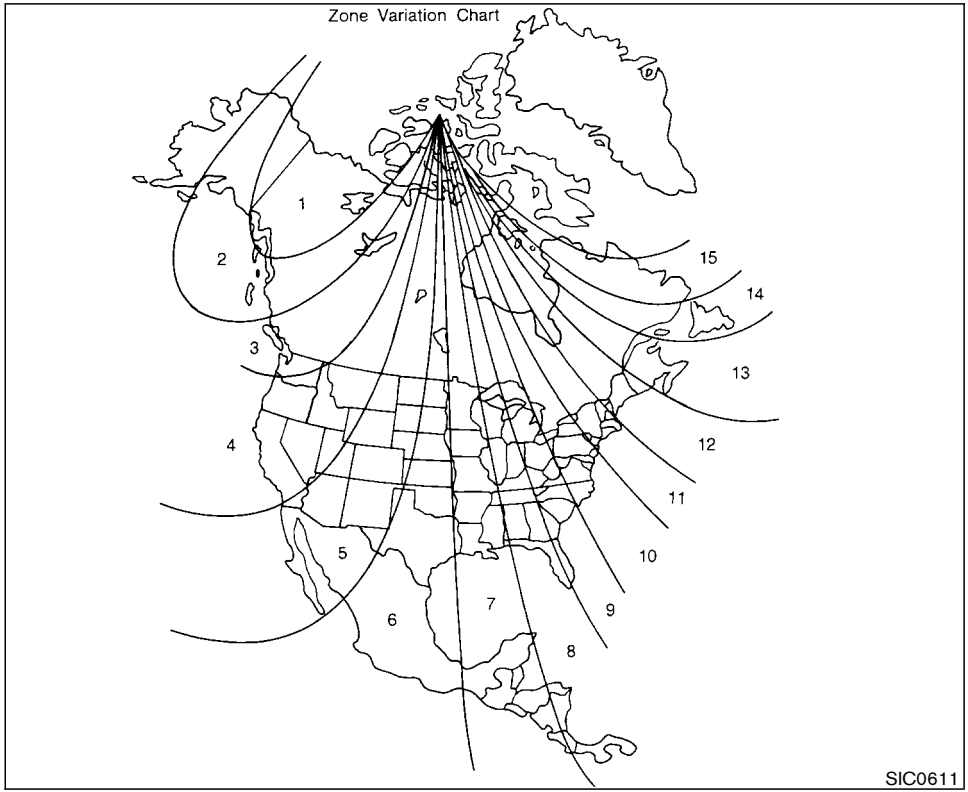

Zone variation change procedure

The difference between magnetic north and geographical north is known as variance. In some areas, this difference can sometimes be great enough to cause false compass readings. Follow these instructions to set the variance for your particular location if this happens:

1. Press the COMPASS switch for more than 3 seconds. The current zone number will appear in the display.
2. Find your current location and variance one number on the zone map.
3. Press the COMPASS switch until the new zone number appears in the display. After you stop pressing the switch in, the display will show a compass direction within a few seconds.

Inaccurate compass direction:

1. With the display turned on, push the COMPASS switch for 3 seconds, until the zone selection comes up (a number will be displayed in the mirror compass window).
2. Toggle until correct zone is found and release switch.
3. The display will show all segments, and return to the normal compass mode within 10 seconds of no switch activity.

4. If the vehicle changes zone, repeat steps 1 thru 3. See map.

- If the compass deviates from the correct indication soon after repeated adjustment, have the compass checked at an authorized dealer.
- The compass may not indicate the correct compass point in tunnels or while driving up or down a steep hill.
  (The compass returns to the correct compass point when the vehicle moves to an area where the geomagnetism is stabilized.)

CAUTION

- **Do not install a ski rack, antenna, etc. which are attached to the vehicle by means of a magnet. They affect the operation of the compass.**
- **When cleaning the mirror, use a paper towel or similar material dampened with glass cleaner. Do not spray glass cleaner directly on the mirror as it may cause the liquid cleaner to enter the mirror housing.**

WARNING/INDICATOR LIGHTS AND AUDIBLE REMINDERS

ABS or (ABS)	Anti-lock brake warning light		Low washer fluid warning light	AWD LOCK	AWD (All wheel drive) LOCK indicator light (AWD models)
AWD	AWD (All wheel drive) warning light (AWD models)		Seat belt warning light		High beam indicator light (Blue)
BRAKE or (!)	Brake warning light		Supplemental air bag warning light	SERVICE ENGINE SOON	Malfunction indicator lamp (MIL)
	Charge warning light		Low tire pressure warning light (if so equipped)		Security indicator light
	Door open warning light	CRUISE	Cruise main switch indicator light	SLIP	Slip indicator light (if so equipped)
	Engine oil pressure warning light	SET	Cruise set indicator light		Turn signal/hazard indicator lights
	Low fuel warning light	CVT	CVT (Continuously variable transmission) indicator light	VDC OFF	Vehicle dynamic control off indicator light (if so equipped)

CHECKING BULBS

Apply the parking brake and turn the ignition key to ON without starting the engine. The following lights will come on:

, BRAKE or (!) , , SERVICE ENGINE SOON , AWD

The following lights come on briefly and then go off:

, ABS or (ABS) , AWD LOCK , CVT , , SLIP , VDC OFF

If any light fails to come on, it may indicate a burned-out bulb or an open circuit in the electrical system. Have the system repaired promptly.

WARNING LIGHTS

ABS or (ABS) Anti-lock brake warning light

After turning the ignition key to the ON position, the light will illuminate. The light will turn off after about 2 seconds if the system is operational.

If the light comes on while the engine is running, it may indicate that the anti-lock brake system is not functioning properly. Have the system checked by your NISSAN dealer.

If an abnormality occurs in the system, the anti-lock function will cease but the ordinary brakes will continue to operate normally. See “Anti-lock brake system (ABS)” in the “5. Starting and driving” section for further details.

If the light comes on while you are driving, contact your NISSAN dealer for repair.

AWD AWD (All wheel drive) warning light (AWD models)

The AWD warning light comes on when the key switch is turned to ON. It turns off soon after the engine is started.

If the AWD system malfunctions or the revolution, or radius of the front and the rear wheel differs, the warning light will either remain illuminated or blink. See “Using all wheel drive (AWD)” in the “5. Starting and driving” section.

CAUTION

- **If the warning light comes on while driving, AWD mode will change to 2WD mode. Reduce the vehicle speed and have your vehicle checked by a NISSAN dealer as soon as possible.**
- **Do not drive on dry hard surface roads in the LOCK mode.**
- **If the AWD warning light blinks on when you are driving:**
  - **blinks rapidly (about twice a second):**
    Pull off the road in a safe area, and idle the engine. The driving mode will change to 2WD to prevent the AWD system from malfunctioning. If the warning light turns off, you can drive again.
  - **blinks slowly (about once every 2 seconds):**
    Pull off the road in a safe area, and idle the engine. Check that all tire sizes are the same, tire pressure is correct and tires are not worn.

If the warning light is still on after the above operation, have your vehicle checked by a NISSAN dealer as soon as possible.

BRAKE or (!) Brake warning light

This light functions for both the parking brake and the foot brake systems.

Parking brake indicator:

When the ignition key is in the ON position, the light comes on when the parking brake is applied.

Low brake fluid warning light:

The light warns of a low brake fluid level. If the light comes on while the engine is running with the parking brake not applied, stop the vehicle and perform the following:

1. Check the brake fluid level. Add brake fluid as necessary. See “Brake fluid” in the “8. Maintenance and do-it-yourself” section.

WARNING

- **Your brake system may not be working properly if the warning light is on. Driving could be dangerous. If you judge it to be safe, drive carefully to the nearest service station for repairs. Otherwise, have your vehicle towed because driving it could be dangerous.**
- **Pressing the brake pedal with the engine stopped and/or low brake fluid level may increase your stopping distance and braking will require greater pedal effort as well as greater pedal travel.**

- **If the brake fluid level is below the MIN mark on the brake fluid reservoir, do not drive until the brake system has been checked at a NISSAN dealer.**

2. If the brake fluid level is correct, have the warning system checked by a NISSAN dealer. Avoid high speed driving and abrupt braking.

   If both the brake warning light and the anti-lock brake warning light come on simultaneously, it may indicate the anti-lock brake system is not functioning properly. See “Anti-lock brake warning light” earlier in this section.

Charge warning light

If the light comes on while the engine is running, it may indicate that the charging system is not functioning properly. Turn the engine off and check the alternator belt. If the belt is loose, broken, missing or if the light remains on, see your NISSAN dealer immediately.

CAUTION

Do not continue driving if the belt is loose, broken or missing.

Door open warning light

This light comes on when any of the doors are not closed securely while the ignition key is ON.

Engine oil pressure warning light

This light warns of low engine oil pressure. If the light blinks or comes on during normal driving, pull off the road in a safe area, stop the engine **immediately** and call a NISSAN dealer or other authorized repair shop.

The oil pressure warning light is not designed to indicate a low oil level. Use the dipstick to check the oil level. See “Engine oil” in the “8. Maintenance and do-it-yourself” section.

CAUTION

Running the engine with the oil pressure warning light on could cause serious damage to the engine almost immediately. Turn off the engine as soon as it is safe to do so.

Low fuel warning light

This light comes on when the fuel in the tank is getting low. Refuel as soon as it is convenient, preferably before the fuel gauge reaches E.

There will be a small reserve of fuel remaining in the tank when the fuel gauge needle reaches E.

Low washer fluid warning light

This light comes on when the washer tank fluid is at a low level. Add washer fluid as necessary. See “Window washer fluid” in the “8. Maintenance and do-it-yourself” section.

Seat belt warning light and chime

The light and chime remind you to fasten seat belts. The light illuminates whenever the ignition key is turned to ON, and will remain illuminated until the driver’s seat belt is fastened. At the same time, the chime will sound for about 6 seconds unless the driver’s seat belt is securely fastened.

See “Seat belts” in the “1. Seats, restraints and supplemental air bag systems” section for precautions on seat belt usage.

Supplemental air bag warning light

After turning the ignition key to the ON position, the supplemental air bag warning light will illuminate. The supplemental air bag warning light will turn off after about 7 seconds if the system is operational.

If any of the following conditions occur, the supplemental front air bag, supplemental side air bag and curtain side-impact air bag systems, and pre-tensioner seat belt needs servicing and your vehicle must be taken to your nearest NISSAN dealer.

- The supplemental air bag warning light remains on after approximately 7 seconds.
- The supplemental air bag warning light flashes intermittently.
- The supplemental air bag warning light does not come on at all.

Unless checked and repaired, the Supplemental Restraint System and/or the pre-tensioner seat belt may not function properly. For additional information, see “Supplemental restraint system” in the “1. Seats, restraints and supplemental air bag systems” section.

WARNING

If the supplemental air bag warning light is on, it could mean that the supplemental front air bag, supplemental side air bag, curtain air bag systems and/or pre-tensioner seat belt will not operate in an accident.

Low tire pressure warning light (if so equipped)

The light comes on for about 1 second when the key switch is turned ON, and then it turns off.

This light warns if the tire pressure is low.

Low tire pressure warning:

If the vehicle is being driven with a low tire pressure, the light will illuminate. Also a chime will sound for about 10 seconds if a tire pressure is low.

For additional information, see “Low tire pressure warning system” in the “5. Starting and driving” section and “Low tire pressure warning system” in the “6. In case of emergency” section. Also, you can check the pressure of all 4 tires on the display screen. See “Tire pressure information” in the “4. Display screen, heater, air conditioner and audio systems” section.

WARNING

- **If the light does not come on with the key switch turned ON, have the vehicle checked by a NISSAN dealer as soon as possible.**
- **If the light comes on while driving, avoid sudden steering maneuvers or abrupt braking, reduce vehicle speed, pull off the road to a safe location and stop the vehicle as soon as possible. Serious vehicle damage could occur and may lead to an accident and could result in serious personal injury. Check the tire pressure for all four wheels and adjust the pressure to the COLD tire pressure shown on the tire placard. If the light still comes on while driving after adjusting the tire pressure, a tire may be flat. If you have a flat tire, replace it with a spare tire as soon as possible.**

- **When a spare tire is mounted or a wheel is replaced, the pressure of that tire will not be indicated and not be monitored by the low tire pressure warning system. Contact your NISSAN dealer as soon as possible for tire replacement and/or system resetting.**

CAUTION

- **The low tire pressure warning is not a substitute for the regular tire pressure check. Be sure to check the tire pressure regularly.**
- **If the vehicle is being driven at speeds of less than 20 MPH (32 km/h), the low tire pressure warning system may not operate correctly.**
- **Be sure to install the specified size of tires to the four wheels correctly.**

INDICATOR LIGHTS

CRUISE Cruise main switch indicator light

The light comes on when the cruise control main switch is pushed. The light goes out when the main switch is pushed again. When the cruise main switch indicator light comes on, the cruise control system is operational.

SET Cruise set indicator light

The light comes on while the vehicle speed is controlled by the cruise control system. If the light blinks while the engine is running, it may indicate the cruise control system is not functioning properly. Have the system checked by your NISSAN dealer.

CVT CVT (Continuously variable transmission) indicator light

When the ignition switch is turned ON, the light comes on for 2 seconds.

AWD LOCK AWD (All wheel drive) LOCK indicator light (AWD models)

This light comes on when the ignition switch is turned to ON, and turns off within 1 second.

When selecting LOCK mode while the engine is running, this light will illuminate. See “Using all wheel drive (AWD)” in the “5. Starting and driving” section.

High beam indicator light (Blue)

This light comes on when the headlight high beam is on and goes out when the low beam is selected.

SERVICE ENGINE SOON Malfunction indicator lamp (MIL)

If the malfunction indicator lamp comes on steady or blinks while the engine is running, it may indicate a potential emission control and/or CVT malfunction.

The malfunction indicator lamp may also come on steady if the fuel filler cap is loose or missing, or if the vehicle runs out of fuel. Check to make sure the fuel filler cap is installed and closed tightly, and that the vehicle has at least three gallons of fuel in the fuel tank.

After a few driving trips, the SERVICE ENGINE SOON lamp should turn off if no other potential emission control system malfunction exists.

Operation

The malfunction indicator lamp will come on in one of two ways:

- Malfunction indicator lamp on steady — An emission control system and/or CVT malfunction has been detected. Turn the ignition key to OFF and check the fuel filler cap. If the fuel filler cap is loose or missing, tighten or install the cap and continue to drive the vehicle. The SERVICE ENGINE SOON lamp should turn off after a few driving trips. If the SERVICE ENGINE SOON lamp does not turn off after a few driving trips, have the vehicle inspected by a NISSAN dealer. You do not need to have your vehicle towed to the dealer.
- Malfunction indicator lamp blinking — An engine misfire has been detected which may damage the emission control system. To reduce or avoid emission control system damage:

  a) Do not drive at speeds above 45 MPH (72 km/h).
  b) Avoid hard acceleration or deceleration.
  c) Avoid steep uphill grades.
  d) If possible, reduce the amount of cargo being hauled or towed.

  The malfunction indicator lamp may stop blinking and come on steady.

  Have the vehicle inspected by a NISSAN dealer. You do not need to have your vehicle towed to the dealer.

CAUTION

Continued vehicle operation without having the emission control system checked and repaired as necessary could lead to poor driveability, reduced fuel economy, and possible damage to the emission control system.

Security indicator light

This light blinks whenever the ignition switch is in the LOCK, OFF or ACC position. This function indicates the security systems equipped on the vehicle are operational.

For additional information, see “Security systems” later in this section.

SLIP Slip indicator light (if so equipped)

This indicator will blink when the VDC system or the traction control system is operating, thus alerting the driver to the fact that the road surface is slippery and the vehicle is nearing its traction limits.

You may feel or hear the system working, but this is normal.

The light will blink on for a few seconds after the VDC system stops limiting wheel spin.

The slip indicator light also comes on when you turn the ignition key to ON. The light will turn off after about 2 seconds if the system is operational. If the light does not come on or go off, have the traction control system checked by your NISSAN dealer.

Turn signal/hazard indicator lights

The light flashes when the turn signal switch lever or hazard switch is turned on.

VDC OFF Vehicle dynamic control (VDC) off indicator light (if so equipped)

After turning the ignition key to the ON position, the light will illuminate. The light will turn off in about 2 seconds if the vehicle dynamic control (VDC) system is operational.

The light comes on when the vehicle dynamic control (VDC) off switch is pushed to OFF. This indicates the vehicle dynamic control system and traction control system are not operating. When the vehicle dynamic control off indicator light and slip indicator light come on with the vehicle dynamic control system turned on, this light alerts the driver to the fact that the vehicle

dynamic control system's fail-safe mode is operating, that is the system may not be functioning properly. Have the system checked by your NISSAN dealer. If an abnormality occurs in the system, the vehicle dynamic control system function will be canceled but the vehicle is still driveable. For additional information, see "Vehicle dynamic control (VDC) system" in the "5. Starting and driving" section of this manual.

AUDIBLE REMINDERS

Key reminder chime

The chime will sound if the driver's side door is opened while the key is left in the ignition switch (ignition switch is turned to OFF or ACC). Remove the key and take it with you when leaving the vehicle.

Light reminder chime

The chime will sound when the driver's door is opened with the headlight switch on unless the ignition key is in the ON position.

Make sure to turn the light switch off when you leave the vehicle.

Seat belt warning chime

The chime will sound for about 6 seconds unless the drivers seat belt is securely fastened.

Brake pad wear warning

The disc brake pads have audible wear warnings. When a brake pad requires replacement, it will make a high pitched scraping sound when the vehicle is in motion whether or not the brake pedal is depressed. Have the brakes checked as soon as possible if the warning sound is heard.

SECURITY SYSTEMS

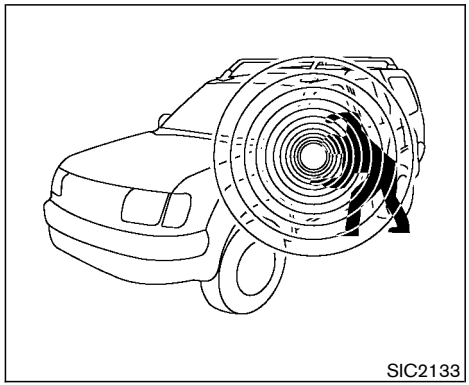

Your vehicle has two types of security systems, as follows:

- Vehicle Security System
- Nissan Vehicle Immobilizer System

The security condition will be shown by the security indicator light in the meter panel.

VEHICLE SECURITY SYSTEM

The vehicle security system provides visual and audio alarm signals if parts of the vehicle are disturbed.

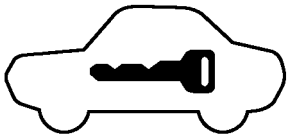

SIC2045

How to activate the vehicle security system

1. Close all windows.

The system can be activated even if the windows are open.

2. Remove the key from the ignition switch.
3. Close and lock all doors and hood.

   Lock all doors by pressing the LOCK button on the keyfob or using the key. When using the keyfob, the hazard indicators flash twice to indicate all doors are locked.

4. Confirm that the SECURITY indicator light in the meter comes on. The SECURITY indicator light glows for about 30 seconds and then blinks. The system is now activated. If, during this 30 second time period, the door is unlocked by the key or the keyfob, or the ignition key is turned to ACC or ON, the system will not activate.

- **Even when the driver and/or passengers are in the vehicle, the system will activate with all doors and hood locked and ignition key off. Turn the ignition key to ACC to turn the system off.**

Vehicle security system operation

The security system will give the following alarm:

- The headlights blink and the horn sounds intermittently.
- The alarm automatically turns off after approximately 1 minute. However, the alarm reactivates if the vehicle is tampered with again. The alarm can be shut off by unlocking a door with the key, or by pressing the UNLOCK button on the keyfob.

The alarm is activated by:

- Opening the door without using the key or keyfob.
- Opening the back door without using the keyfob.
- Opening the hood.

How to stop alarm

The alarm will stop only by unlocking a door with the key, or by pressing the UNLOCK button on keyfob. The alarm will not stop if the ignition switch is turned to ACC or ON.

If the system does not operate as described above, have it checked by your NISSAN dealer.

NISSAN VEHICLE IMMOBILIZER SYSTEM

The Nissan Vehicle Immobilizer System will not allow the engine to start without the use of the registered Nissan Vehicle Immobilizer System key.

If the engine fails to start using the registered Nissan Vehicle Immobilizer System key, it may be due to interference caused by another Nissan Vehicle Immobilizer System key, an automated toll road device or automated payment device on the key ring. Restart the engine using the following procedures:

1. Leave the ignition switch in the ON position for approximately 5 seconds.
2. Turn the ignition switch to the OFF or LOCK position and wait approximately 10 seconds.

3. Repeat step 1 and 2 again.
4. Restart the engine while holding the device (which may have caused the interference) separate from the registered Nissan Vehicle Immobilizer System key.

   If this procedure allows the engine to start, NISSAN recommends placing the registered Nissan Vehicle Immobilizer System key on a separate key ring to avoid interference from other devices.

Statement related to section 15 of FCC rules for Nissan Vehicle Immobilizer System (CONT ASSY-BCM, ANT ASSY-IMMOBILIZER)

This device complies with part 15 of the FCC Rules and RSS-210 of Industry Canada. Operation is subject to the following two conditions;

(1) This device may not cause harmful interference, and (2) this device must accept any interference received, including interference that may cause undesired operation of the device.

CHANGES OR MODIFICATIONS NOT EXPRESSLY APPROVED BY THE MANUFACTURE FOR COMPLIANCE COULD VOID THE USER'S AUTHORITY TO OPERATE THE EQUIPMENT.

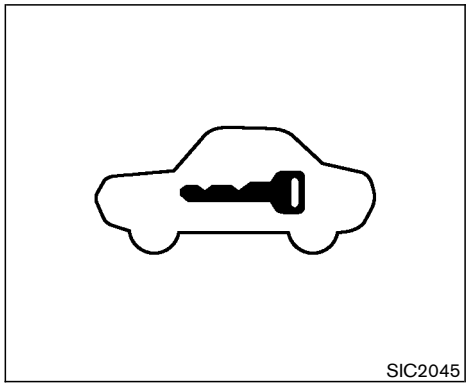

Security indicator light

This light blinks whenever the registered Nissan Vehicle Immobilizer System key is removed or turned to OFF, ACC or LOCK position. This function indicates the security systems equipped on the vehicle are operational.

If Nissan Vehicle Immobilizer System is malfunctioning, this light will remain on while the registered Nissan Vehicle Immobilizer System Key is in the ON position.

If the light still remains on and/or the engine will not start, see your NISSAN dealer for Nissan Vehicle Immobilizer System service as soon as possible. Please bring all Nissan Vehicle Immobilizer System keys that you have when visiting your NISSAN dealer for service.

WINDSHIELD WIPER AND WASHER SWITCH

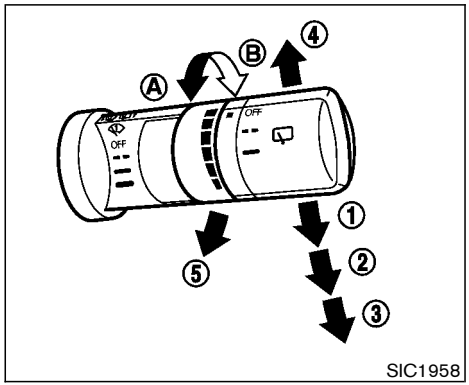

SIC1958

The windshield wiper and washer operates when the ignition key is in the ON position.

Push the lever down to operate the wiper at the following speed:

1. Intermittent — intermittent operation can be adjusted by turning the knob toward A (Slower) or B (Faster). Also, the intermittent operation speed varies in accordance with the vehicle speed. (For example, when the vehicle speed is high, the intermittent operation speed will be faster.)
2. Low — continuous low speed operation
3. High — continuous high speed operation

Push the lever up 4 to have one sweep operation of the wiper.

Pull the lever toward you 5 to operate the washer. Then the wiper will also operate several times.

WARNING

In freezing temperatures the washer solution may freeze on the windshield and obscure your vision which may lead to an accident. Warm the windshield with the defroster before you wash the windshield.

CAUTION

The following could damage the washer system:

- **Do not operate the washer continuously for more than 30 seconds.**
- **Do not operate the washer if the reservoir tank is empty.**

REAR WINDOW WIPER AND WASHER SWITCH

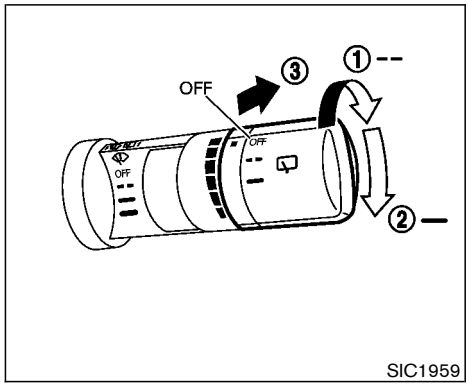

SIC1959

The rear window wiper and washer operate when the ignition switch is in the ON position.

Turn the switch clockwise from the OFF position to operate the wiper.

1. Intermittent — intermittent operation (not adjustable)
2. Low — continuous low speed operation

Push the switch forward 3 to operate the washer. Then the wiper will also operate several times.

CAUTION

- **If the rear window wiper operation is interrupted by snow etc., the wiper may stop moving to protect its motor. If this occurs, turn the wiper switch to OFF and remove the snow etc. on and around the wiper arms. After about 1 minute, turn the switch ON again to operate the wiper.**
- **Do not operate the washer continuously for more than 30 seconds.**
- **Do not operate the washer if reservoir tank is empty.**

WARNING

In freezing temperatures the washer solution may freeze on the rear window glass and obscure your vision. Warm the rear window glass with the defroster before you wash.

REAR WINDOW AND OUTSIDE MIRROR DEFROSTER SWITCH

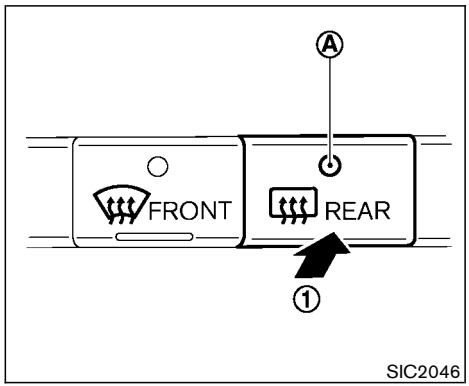

To defog/defrost the rear window glass and outside mirrors (if so equipped), start the engine and push the switch on (1). The indicator light (A) will come on. Push the switch again to turn the defroster off.

It will automatically turn off in approximately 15 minutes.

CAUTION

When cleaning the inner side of the rear window, be careful not to scratch or damage the rear window defroster.

HEADLIGHT AND TURN SIGNAL SWITCH

XENON HEADLIGHTS (if so equipped)

WARNING

HIGH VOLTAGE

- **When xenon headlights are on, they produce a high voltage. To prevent an electric shock, never attempt to modify or disassemble. Always have your xenon headlights replaced at a NISSAN dealer.**
- **Xenon headlights provide considerably more light than conventional headlights. If they are not correctly aimed, they might temporarily blind an oncoming driver or the driver ahead of you and cause a serious accident. If headlights are not aimed correctly, immediately take your vehicle to a NISSAN dealer and have the headlights adjusted correctly.**

When the xenon headlight is initially turned on, its brightness or color varies slightly. However, the color and brightness will soon stabilize.

- **The life of xenon headlights will be shortened by frequent on-off operation. It is generally desirable not to turn off the headlights for short intervals (for example, when the vehicle stops at a traffic signal). Even when the daytime running lights are active (Canada only), the xenon headlights do not turn on. This way the life of the xenon headlights is not reduced.**
- **If the xenon headlight bulb is close to burning out, the brightness will drastically decrease, the light will start blinking, or the color of the light will become reddish. If one or more of the above signs appear, contact a NISSAN dealer.**

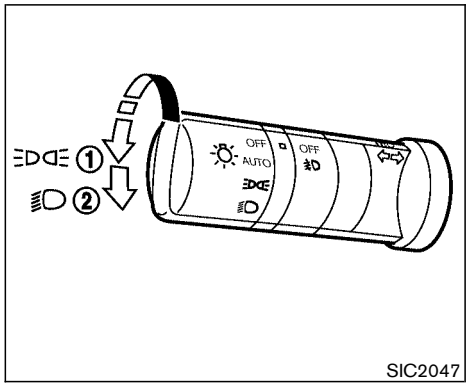

Type A

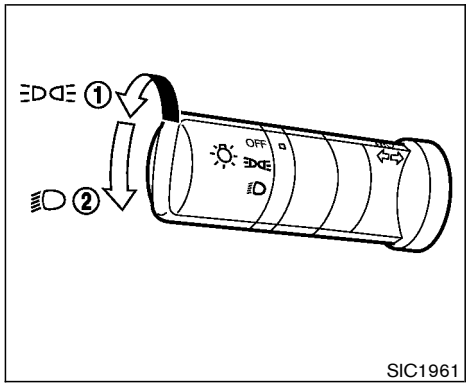

Type B

HEADLIGHT SWITCH

Lighting

(1) Turn the switch to the position:

The front park, side marker, tail, license plate and instrument lights will come on.

(2) Turn the switch to the position:

Headlights will come on and all the other lights remain on.

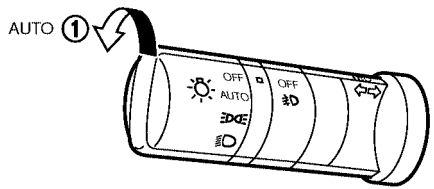

SIC2051

Autolight system (if so equipped)

The autolight system allows the headlights to be set so they turn on and off automatically.

To set the autolight system:

1. Make sure the headlight switch is in the AUTO position.
2. Turn the ignition key to ON.
3. The autolight system automatically turns the headlights on and off.

To turn the autolight system off, turn the switch to the OFF, , or position.

The autolight system can turn on the headlights automatically when it is dark, turn off the headlights when it is light, and keep the headlights on for up to 45 seconds after you turn the key to OFF and open any door then close all the doors.

If the ignition switch is turned OFF and one of the doors is opened and this condition is continued, the headlights remain ON for five minutes.

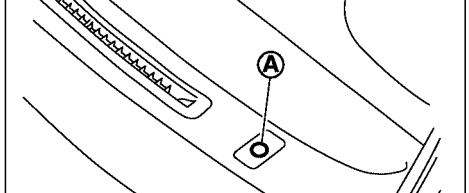

SIC2052

Be sure not to put anything on top of the photo sensor (A) located on the top left-hand side of the instrument panel. The photo sensor controls the autolamp; if it is covered, the photo sensor reacts as if it is dark and the headlights will illuminate.

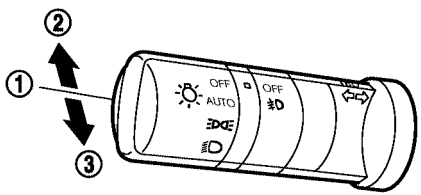

SIC2048

Headlight beam select

① To select the low beam, put the lever in the neutral position as shown.

② To select the high beam, push the lever forward. Pull it back to select the low beam.

③ Pulling the lever toward you will flash the headlight high beam.

Battery saver system

- When the headlight switch is in the ≡DE or ≡D position while the ignition switch is in the ON position, the lights will automatically turn off 5 minutes after the ignition switch has been turned to the OFF position.
- When the headlight switch remains in the ≡DE or ≡D position after the lights automatically turn off, the lights will turn on for 5 minutes when the headlight switch is turned to the OFF position and then turn to the ≡DE or ≡D position.

CAUTION

- **Be sure to turn the light switch to the OFF position when you leave the vehicle for extended periods of time, otherwise the battery will go dead.**
- **Never leave the light switch on when the engine is not running for extended periods of time even if the headlights turn off automatically.**

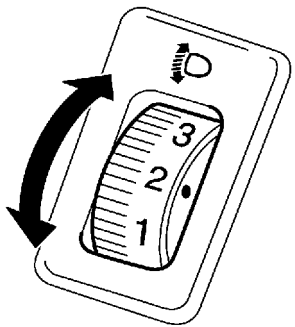

SIC1911

Headlight aiming control (if so equipped)

Depending on the number of occupants in the vehicle and the load it is carrying, the headlight axis may be higher than desired. If the vehicle is traveling on a hilly road, the headlights may directly hit the rearview mirror of the vehicle ahead or the windshield of the oncoming vehicle. The light axis can be lowered with the operation of the switch.

The larger the number designated on the switch, the lower the axis.

When traveling with no heavy load or on a flat road, select position 0.

WARNING

Xenon headlights are extremely bright compared to conventional headlights. If the xenon headlights hit the rearview mirror of the vehicle ahead or the windshield of the oncoming vehicle, the driver of these vehicles may have difficulty driving because of the brightness. Use the headlight aiming control switch to lower the light axis. See earlier in this section for information on xenon headlights.

DAYTIME RUNNING LIGHT SYSTEM (CANADA ONLY)

The fog lights automatically illuminate when the engine is started. The daytime running lights operate with the headlight switch in the OFF position or in the position.

The fog light may come on after turning the key to the OFF position and immediately turning it to the ON position. This is not a malfunction.

The daytime running light will be turned off when the headlight switch is turned to the AUTO or position.

The daytime running light will remain on until the ignition switch is turned to the ACC or OFF position.

WARNING

When the daytime running light system is active, tail lights on your vehicle are not on. It is necessary at dusk to turn on your headlights. Failure to do so could cause an accident injuring yourself and others.

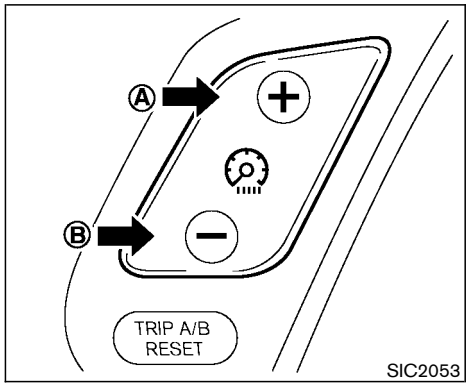

INSTRUMENT BRIGHTNESS CONTROL

The instrument brightness control operates when the light switch is in the or position.

To adjust the brightness of instrument panel lights, press the control switches located on the left side of the meter panel. Pressing the upper switch (A) will brighten the lights. The lower switch (B) dims the lights. Repeatedly pressing the lower switch will turn the lights off.

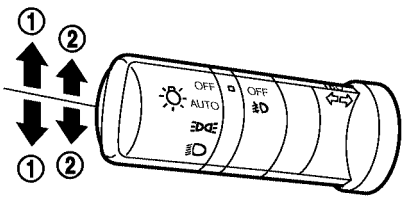

SIC2049

TURN SIGNAL SWITCH

① Turn signal

Move the lever up or down to signal the turning direction. When the turn is completed, the turn signals cancel automatically.

② Lane change signal

To indicate a lane change, move the lever up or down to the point where lights begin flashing.

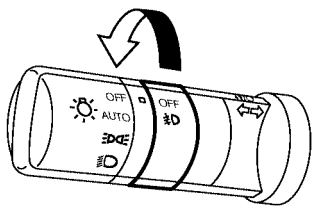

SIC2054

FOG LIGHT SWITCH (if so equipped)

To turn the fog lights on, turn the headlight switch to the position, then turn the switch to the position. To turn them off, turn the switch to the OFF position.

The headlights must be on for the fog lights to operate (except for the daytime running light).

HAZARD WARNING FLASHER SWITCH

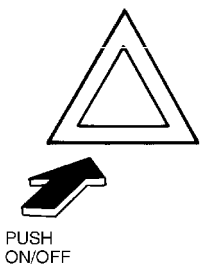

SIC1447

Push the switch (located on the right side of the meter panel) on to warn other drivers when you must stop or park under emergency conditions. All turn signal lights will flash.

Some state laws may prohibit the use of the hazard warning flasher switch while driving.

WARNING

- **If stopping for an emergency, be sure to move the vehicle well off the road.**

- **Do not use the hazard warning flashers while moving on the highway unless unusual circumstances force you to drive so slowly that your vehicle might become a hazard to other traffic.**
- **Turn signals do not work when the hazard warning flasher lights are on.**

The flasher can be actuated with the ignition switch either off or on.

HORN

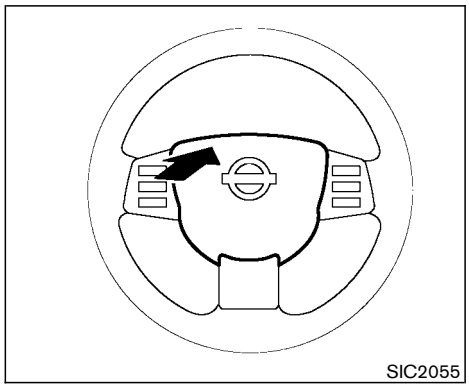

To sound the horn, push the center pad upper area of the steering wheel.

WARNING

Do not disassemble the horn. Doing so could affect proper operation of the supplemental front air bag system. Tampering with the supplemental front air bag system may result in serious personal injury.

HEATED SEATS (if so equipped)

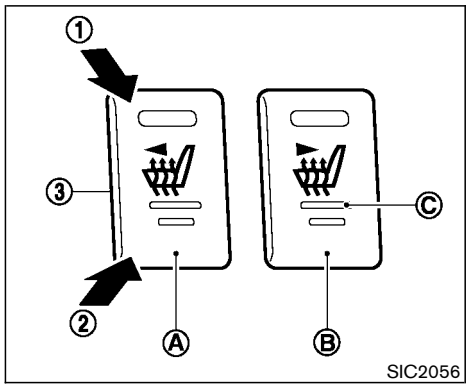

The front seats are warmed by built-in heaters. The switches located on the center console can be operated independently (driver side seat (A) and front passenger side seat (B)) of each other.

1. Start the engine.
2. Select heat range.
   (1) For high heat, press the (High) side of the switch.
   (2) For low heat, press the (Low) side of the switch.
   (3) For no heat, the switch has a center OFF position between low and high.

The indicator light in the switch ⓒ will illuminate when low or high is selected.

The heater is controlled by a thermostat, automatically turning the heater on and off. The indicator light will remain on as long as the switch is on.

3. When the vehicle's interior is warmed, or before you leave the vehicle, be sure to turn the switch to the off position (center) ③.

CAUTION

- **The battery could run down if the seat heater is operated while the engine is not running.**
- **Do not use the seat heater for extended periods or when no one is using the seat.**
- **Do not put anything on the seat which insulates heat, such as a blanket, cushion, seat cover, etc. Otherwise, the seat may become overheated.**
- **Do not place anything hard or heavy on the seat or pierce it with a pin or similar object. This may result in damage to the heater.**
- **Any liquid spilled on the heated seat should be removed immediately with a dry cloth.**
- **When cleaning the seat, never use gasoline, thinner, or any similar materials.**
- **If any abnormalities are found or the heated seat does not operate, turn the switch off and have the system checked by your NISSAN dealer.**

VEHICLE DYNAMIC CONTROL (VDC) OFF SWITCH (if so equipped)

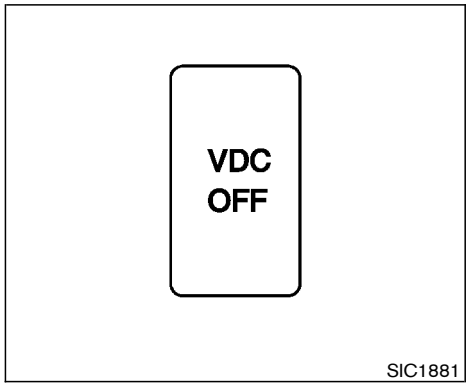

The vehicle should be driven with the Vehicle Dynamic Control (VDC) System ON for most driving conditions.

When the vehicle is stuck in mud or snow, the VDC system reduces the engine output to reduce wheel spin. The engine speed will be reduced even if the accelerator is depressed to the floor. If maximum engine power is needed to free a stuck vehicle, turn the VDC system off.

To cancel the Vehicle Dynamic Control (VDC) System, push the VDC OFF switch to turn off the system. The VDC OFF indicator light will come on.

Push the VDC OFF switch again or restart the

engine to turn ON the system. See “Vehicle dynamic control (VDC) system” in the “5. Starting and driving” section.

POWER OUTLET

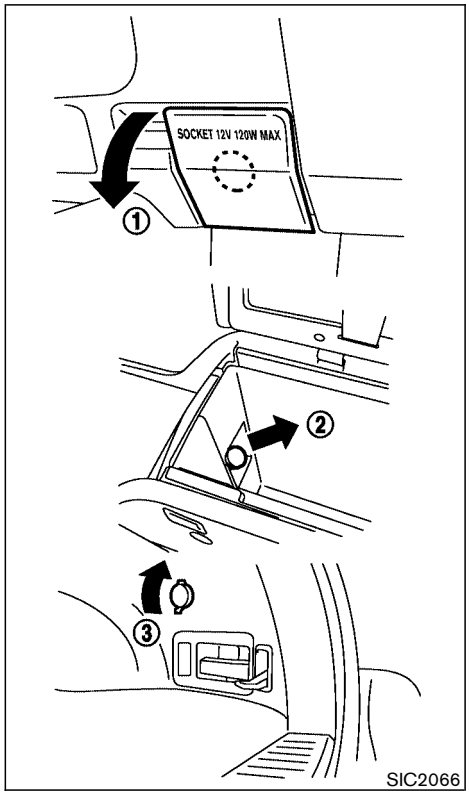

The power outlet is for powering electrical accessories such as cellular telephones.

1. Located beside the glove box (if so equipped):
   Pull down the cover to open.
2. Located inside the console box:
   Pull to remove the cover to open.
3. Located the side of the luggage room (if so equipped):
   Pull up the cover to open.

CAUTION

- **Use caution as the socket and plug may be hot during or immediately after use.**
- **This power outlet is not designed for use with a cigarette lighter unit.**
- **Do not use with accessories that exceed a 12 volt, 120W (10A) power draw. Do not use double adapters or more than one electrical accessory.**
- **Use only one power outlet at a time.**
- **Use this power outlet with the engine**

running. (If the engine is stopped, this could result in a discharged battery.)

- Avoid using when the air conditioner, headlights or rear window defroster is on.
- Before inserting or disconnecting a plug, be sure to turn off the power switch of electrical accessory being used or the ACC power of the vehicle.
- Push the plug in as far as it will go. If good contact is not made, the plug may overheat or the internal temperature fuse may blow.
- When not in use, be sure to replace the cover. Do not allow water to contact the socket.

STORAGE

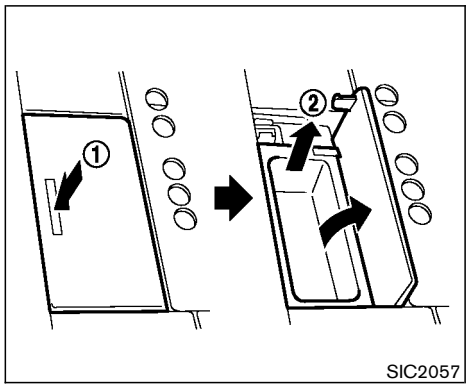

COIN BOX

WARNING

The coin box should not be used while driving so full attention may be given to vehicle operation.

To open, push the coin box lid (1) as illustrated.

The inner tray can be removed (2) as illustrated.

Do not place valuable items in the box.

Do not use the coin box as an ashtray.

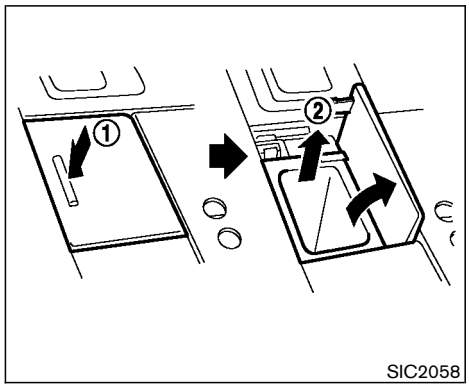

CELLULAR PHONE HOLDER

WARNING

- **The cellular phone holder should not be used while driving so full attention may be given to vehicle operation.**
- **A cellular telephone should not be used while driving so full attention may be given to vehicle operation. Some jurisdictions prohibit the use of cellular telephones while driving.**

- **If a conversation in a moving vehicle requires you to take notes, pull off the road to a safe location and stop your vehicle before doing so.**

To open, push the cellular phone holder lid ① as illustrated.

The inner tray can be removed ② as illustrated.

Do not place valuable items in the holder.

Do not use the cellular phone holder as an ashtray.

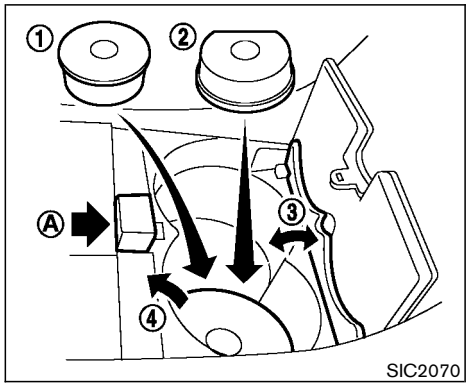

CUP HOLDERS

WARNING

The cup holder should not be used while driving so full attention may be given to vehicle operation.

CAUTION

- **Avoid abrupt starting and braking when the cup holder is being used to prevent spilling the drink. If the liquid is hot, it can scald you or your passenger.**
- **Use only soft cups in the cup holder. Hard objects can injure you in an accident.**

Front:

Push the cup holder lid Ⓐ to open.

① Install the bottom piece for taller size cups.

② Install the reverse side of the bottom piece up for shorter cups.

③ Use this flap for smaller bottles, or for bigger bottles by flipping up.

④ Pull up the inner tray as illustrated to remove for cleaning.

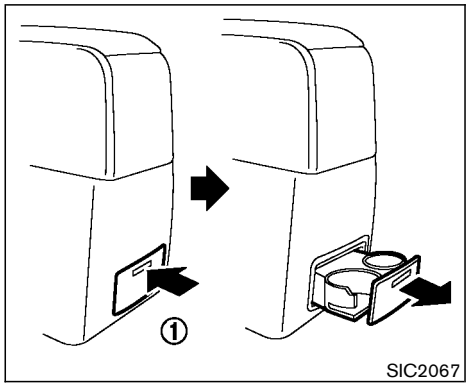

Rear:

Push (1) the cup holder to open.

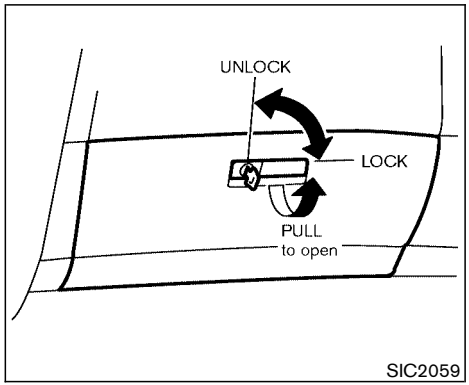

GLOVE BOX

When locking or unlocking the glove box, use the master key.

The glove box may be opened by pulling the handle.

WARNING

Keep glove box lid closed while driving to help prevent injury in an accident or a sudden stop.

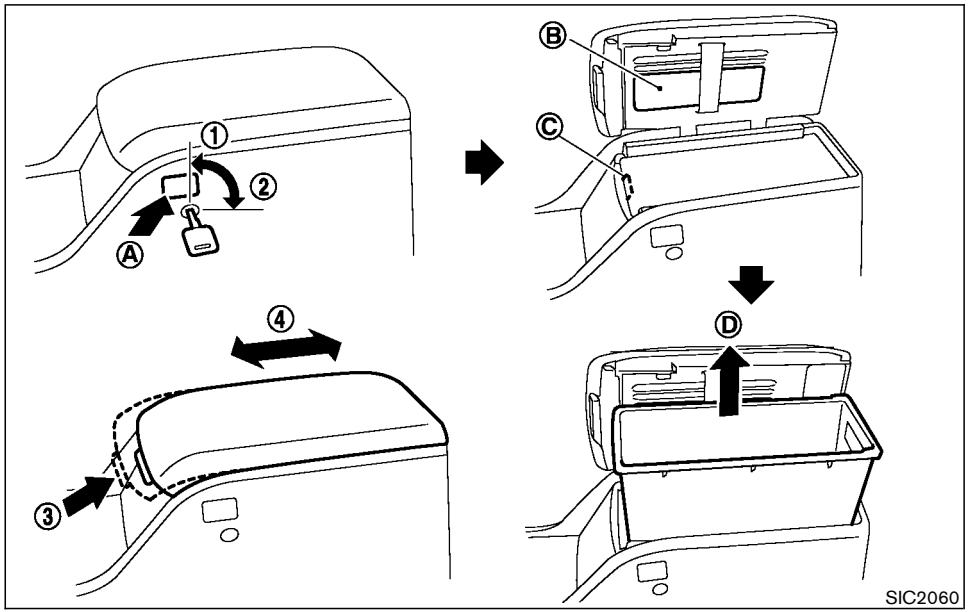

CONSOLE BOX

WARNING

The center console box should not be used while driving so full attention may be given to vehicle operation.

Push the button (A) to open the console box lid.

The inside of the console box lid is designed to be used as a holder (B) such as pen, etc. There is a power outlet (C) inside the console box.

Remove the inside tray (D) to store a large object.

To lock the console box, turn the key to the (1) position. To unlock the console box, turn the key to the (2) position.

Push the button (3) and adjust the armrest (4) to the desired position.

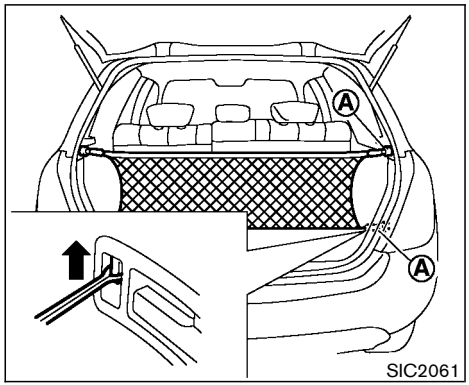

CARGO NET (if so equipped)

The cargo net helps keep packages in the cargo area from moving around while your vehicle is driven.

To install the cargo net, attach the hooks to the retainers (A) on both sides.

To remove the cargo net, detach the hooks from the cargo net retainers.

WARNING

- **Properly secure all cargo to help prevent it from sliding or shifting.**
- **Be sure to secure hooks into the retainers. The cargo restrained in the net must not exceed 30 lb (13.6 kg) or the net may not stay secured.**

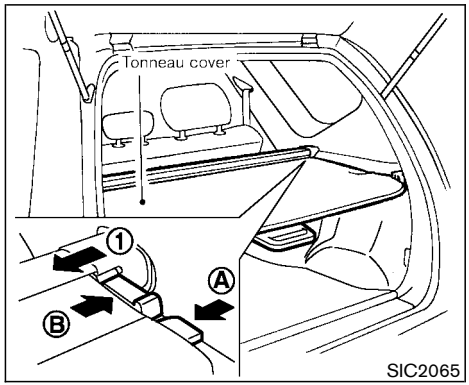

TONNEAU COVER (if so equipped)

The tonneau cover keeps the luggage compartment contents hidden from the outside.

To open the tonneau cover, pull it out and hang both sides on the hooks. To close the tonneau cover, remove it from the hooks and put the hook (A) on the guide (B) then release it as illustrated.

To open the sub cover, pull out and hang both sides on the hooks behind the rear seat head restraint. To close the sub cover, remove it from the hooks and release it.

To remove the tonneau cover, pull the holder to the opposite side (1).

WARNING

- **Never put anything on the tonneau cover, no matter how small. Any object on it could cause an injury in an accident or sudden stop.**
- **Close the tonneau and sub covers when folding the rear seat.**
- **Do not leave the tonneau cover in the vehicle with it disengaged from the holder.**
- **Properly secure all cargo to help prevent it from sliding or shifting. Do not place cargo higher than the seatbacks. In a sudden stop or collision, unsecured cargo could cause personal injury.**
- **The top tether strap may be damaged by contact with the tonneau cover or items in the cargo area. Remove the tonneau cover from the vehicle or secure it and any cargo. Your child could be seriously injured or killed in a collision if the top tether strap is damaged.**

WINDOWS

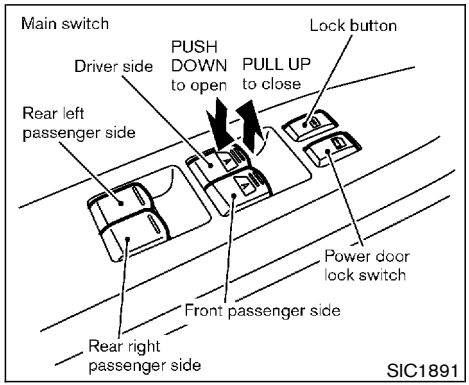

POWER WINDOWS

WARNING

- **Make sure that all passengers have their hands, etc. inside the vehicle while it is in motion and before closing the windows. Use the window lock switch to prevent unexpected use of the power windows.**
- **Do not leave children unattended inside the vehicle. They could unknow-**

ingly activate switches or controls and become trapped in a window. Unattended children could become involved in serious accidents.

The power windows operate when the ignition key is in the ON position and for about 45 seconds, after the ignition key is turned to the ACC or OFF position. If the driver's door or the front passenger's door is opened during this period of about 45 seconds, power to the windows is canceled.

To open or close the window, push down or pull up the switch and hold it. The main switch (driver side switches) will open or close all the windows.

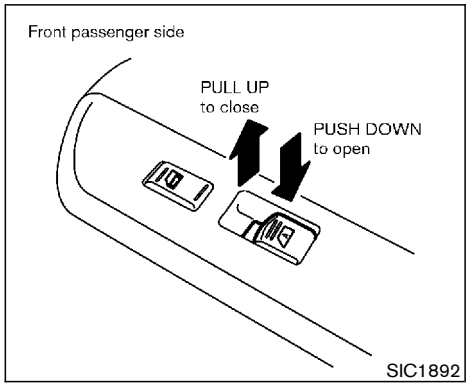

The passenger side switch will open or close only the corresponding window. To open or close the window, hold the switch down or up.

Locking passenger's windows

When the lock button is pushed in, only the driver side window can be opened or closed. Push it in again to cancel.

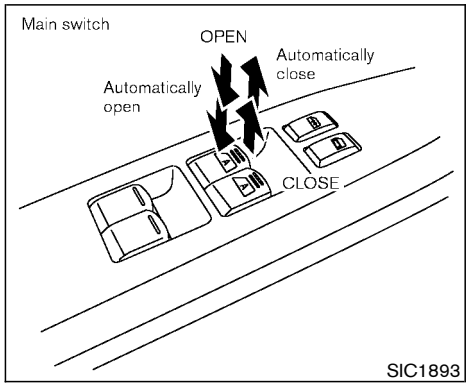

Automatic operation

To fully open or close the driver's or front passenger's side window, completely push down or pull up the switch and release it; it need not be held. The window will automatically open or close all the way. To stop the window, just press or lift the switch on the opposite side.

Auto reverse function (For front window)

If the control unit detects something caught in a front window as it moves up, the window will be immediately lowered.

The auto reverse function can be activated when a front window is closed by automatic operation when the ignition key is in the ON position or for about 45 seconds after the ignition key is turned to the OFF position. The doors remain closed.

Depending on the environment or driving conditions, the auto reverse function may be activated if an impact or load similar to something being caught in the window occurs.

WARNING

There are some small distances immediately before the closed position which cannot be detected. Make sure that all passengers have their hands, etc., inside the vehicle before closing the window.

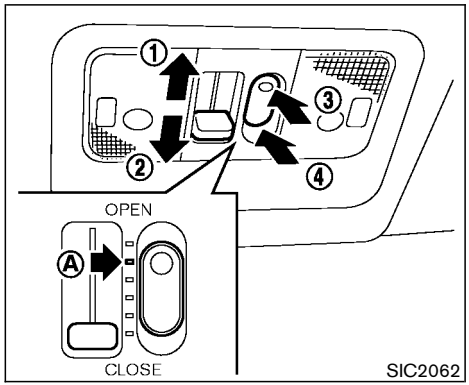

AUTOMATIC SUNROOF

The sunroof will only operate when the ignition key is in the ON position.

The automatic sunroof is operational for about 45 seconds, even if the ignition key is turned to the ACC or OFF position. If the driver's door or the front passenger's door is opened during this period of about 45 seconds, power to the sunroof is canceled.

Sliding the sunroof

To open the roof, slide the switch to the side (1). When the roof is tilted up, it will automatically tilt down and then open.

To close the roof, slide the switch to the side (2).

Sliding position of lid can be chosen according to sliding amount of switch.

To fully open or close the roof, completely move the switch to the (1) or (2) side.

Tilting the sunroof

To tilt up, push the side (3) of the tilt switch. When the roof is open, it will automatically close and then tilt up. To tilt down the sunroof, push the side (4).

Restarting the sunroof sliding switch

The sliding switch will become inoperable after the battery terminal is disconnected, the electrical supply interrupted and/or some abnormality detected. Use the following re-set procedure to return sunroof operation to normal.

1. Keep pushing the tilting switch toward tilt UP.
2. After the lid has tilted up gradually, it will automatically close all the way, then return to normal operation.

Auto reverse function (When closing the sunroof)

If the control unit detects something caught in the sunroof as it moves to the front or tilts down,

the sunroof will immediately open backward or tilt up.

The auto reverse function can be activated when the sunroof is closed by automatic operation when the ignition key is in the ON position or for about 45 seconds after the ignition key is turned to the OFF position.

Depending on the environment or driving conditions, the auto reverse function may be activated if an impact or load similar to something being caught in the sunroof occurs.

If the auto reverse function malfunctions and repeats opening or tilting up the sunroof, keep pushing the tilt down switch within 5 seconds after it happens, then the sunroof will fully close gradually. In this case, make sure nothing is caught in the sunroof.

WARNING

There are some small distances immediately before the closed position which cannot be detected. Make sure that all passengers have their hands, etc., inside the vehicle before closing the sunroof.

Sun shade

Open or close the sun shade by sliding it backward or forward.

The shade will open automatically when the sunroof is opened. However, it must be closed manually.

Comfortable position (Ⓐ)

Depending on the driving speed and air recirculating conditions, wind noise may occur when the sunroof is fully opened. Closing the sunroof one step toward the front position Ⓐ from full open will decrease the wind noise.

WARNING

- **In an accident you could be thrown from the vehicle through an open sunroof. Always use seat belts and child restraints.**
- **Do not allow anyone to stand up or extend any portion of their body out of the opening while the vehicle is in motion or while the sunroof is closing.**

CAUTION

- **Remove water drops, snow, ice or sand from the sunroof before opening.**
- **Do not place any heavy object on the sunroof or surrounding area.**

If the sunroof does not close

Have your NISSAN dealer check and repair the sunroof.

INTERIOR LIGHTS

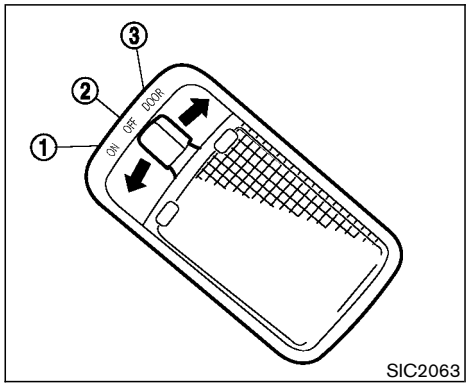

CEILING

The ceiling light has a three-position switch.

When the switch is in the ON position (1), the light will illuminate.

When the switch is in the OFF position (2), the light will turn off.

When the switch is in the DOOR position (3), the light will illuminate when a door is opened.

The light will stay on for about 30 seconds when:

- The doors are unlocked by the keyfob, a key or the lock-unlock switch while all doors are closed and the ignition switch is in the OFF or ACC position.
- The driver's door is opened and then closed while the key is removed from the ignition switch.
- The key is removed from the ignition switch while all doors are closed.

The ceiling light will turn off while the 30 second timer is activated, when:

- The driver's door is locked by the keyfob, a key, or the lock-unlock switch.
- The ignition switch is turned ON.

When the ceiling light switch or map light switch or rear light switch is in the ON position, the ceiling, map, rear and vanity mirror lights will automatically turn off 30 minutes after the ignition switch has been turned to the ACC or OFF position. To turn on the light again, insert the key into the ignition switch and move it to the ON position.

After the above procedure, the ceiling, map, rear and vanity mirror lights will automatically turn off 30 minutes after the latest operation of the following with the ignition switch in the ACC or OFF position:

- Opening or closing any door
- Locking or unlocking with the keyfob, a key or the lock-unlock switch.
- Inserting or removing a key from the ignition switch

These lights will turn on again when any of the above operations is performed after the lights have turned off automatically. (The lights will turn off 30 minutes after the latest operation of the above as well.)

CAUTION

- **Turn off the ceiling, map, rear and vanity mirror lights when you leave the vehicle.**
- **Do not use for extended periods of time with the engine stopped. This could result in a discharged battery.**

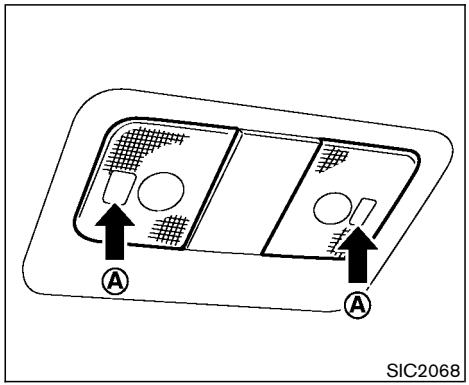

Front

MAP

To turn on the light, push the plastic surface (A) of the light. Push it again to turn off the light.

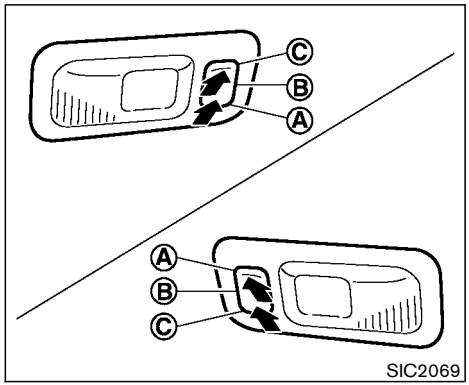

Rear

REAR

The rear personal light has a three-position switch. ((A): DOOR, (B): OFF, (C): ON)

When the switch is in the DOOR position (A), the light will illuminate when a door is opened.

When the ceiling light or the map light switch or rear light switch is in the ON position, the ceiling, map, rear and vanity mirror lights will automatically turn off 30 minutes after the ignition switch has been turned to the OFF position. To turn on the light again, insert the key into the ignition switch and move it to the ON position.

After the above procedure, the ceiling, map, rear or vanity mirror lights will automatically turn off 30 minutes after the latest operation of the following with the ignition switch in the ACC or OFF position:

- Opening or closing any door
- Locking or unlocking with the keyfob, a key or the lock-unlock switch.
- Inserting or removing a key from the ignition switch

These lights will turn on again when any of the above operations is performed after the lights have turned off automatically. (The lights will turn off 30 minutes after the latest operation of the above as well.)

CAUTION

- **Turn off the ceiling, map, rear and vanity mirror lights when you leave the vehicle.**
- **Do not use for extended periods of time with the engine stopped. This could result in a discharged battery.**

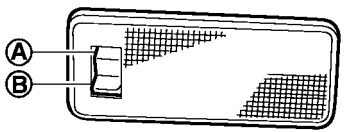

SIC2131

LUGGAGE

When the switch is in the ON position Ⓐ, the light illuminates while the back door is opened. When the back door is closed, the light will go off.

When the switch is in the OFF position Ⓑ, the light will turn off.

VANITY MIRROR LIGHT (if so equipped)

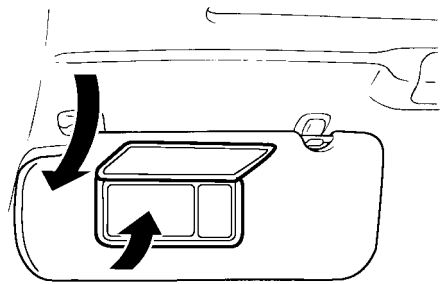
SIC2064

The light on the vanity mirror will turn on when the cover on the vanity mirror is opened.

When the ceiling light or the map light switch or rear light switch is in the ON position, the ceiling, map, rear and vanity mirror lights will automatically turn off 30 minutes after the ignition switch has been turned to the OFF position. To turn on the light again, insert the key into the ignition switch and move it to the ON position.

HomeLink® UNIVERSAL TRANSCEIVER (if so equipped)

The HomeLink® Universal Transceiver provides a convenient way to consolidate the functions of up to three individual hand-held transmitters into one built-in device.

HomeLink® Universal Transceiver:

- Will operate most Radio Frequency (RF) devices such as garage doors, gates, home and office lighting, entry door locks and security systems.
- Is powered by your vehicle's battery. No separate batteries are required. If the vehicle's battery is discharged or is disconnected, HomeLink® will retain all programming.

Once the HomeLink® Universal Transceiver is programmed, retain the original transmitter for future programming procedures (i.e., new vehicle purchases). Upon sale of the vehicle, the programmed HomeLink® Universal Transceiver buttons should be erased for security purposes. For additional information, refer to "Programming HomeLink®" later in this section.

WARNING

- **Do not use the HomeLink® Universal Transceiver with any garage door opener that lacks safety stop and reverse features as required by federal safety standards. (These standards became effective for opener models manufactured after April 1, 1982). A garage door opener which cannot detect an object in the path of a closing garage door and then automatically stop and reverse, does not meet current federal safety standards. Using a garage door opener without these features increases the risk of serious injury or death.**
- **During programming, your garage door or gate may open or close. Make sure that people and objects are clear of the garage door or gate that you are programming.**
- **Your vehicle's engine should be turned off while programming the HomeLink® Universal Transceiver.**

PROGRAMMING HomeLink®

To program your HomeLink® Transceiver to operate a garage door, gate, or entry door opener, home or office lighting, you need to be at the same location as the device. Note: Garage door openers (manufactured after 1996) have "rolling code protection". To program a garage door opener equipped with "rolling code protection"; you will need to use a ladder to get up to the garage door opener motor to be able to access the "smart or learn" program button.

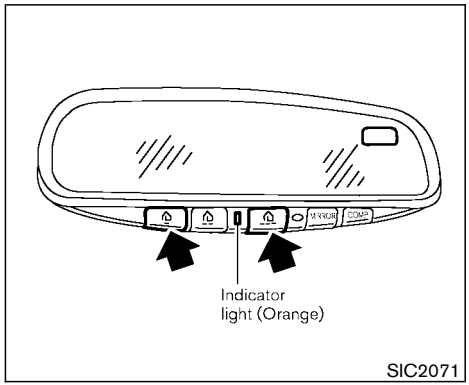

1. To begin, press and hold the 2 outer HomeLink® buttons (to clear the memory) until the indicator light blinks slowly (after 20 seconds). Release both buttons.
2. Position the end of the hand-held transmitter 1-3 inches away from the HomeLink® surface.

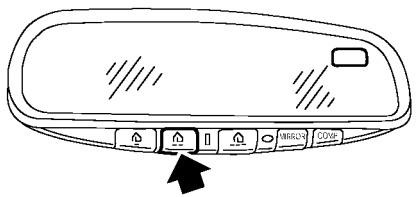

SIC2072

3. Using both hands, simultaneously press and hold both the HomeLink® button you want to program and the hand-held transmitter button.
   DO NOT release the buttons until step 4 has been completed.
4. Hold down both buttons until the indicator light on the HomeLink® flashes, changing from a “slow blink” to a “rapidly flashing blink”. This could take up to 90 seconds. When the indicator light flashes rapidly, both buttons may be released. The rapidly flashing light indicates successful programming. To activate the garage door or other programmed device, press and hold the programmed HomeLink® button - releasing when the device begins to activate.
5. If the indicator light on the HomeLink® blinks rapidly for two seconds and then turns solid, HomeLink® has picked up a “rolling code” garage door opener signal. You will need to proceed with the next steps to train the HomeLink® to complete the programming which may require a ladder and another person for convenience.
6. Press and release the “smart” or “learn” program button located on the garage door opener’s motor to activate the “training mode”. This button is usually located near the antenna wire that hangs down from the motor. If the wire originates from under a light lens, you will need to remove the lens to access the program button.

NOTE:

Once you have pressed and released the program button on the garage door opener’s motor and the “training light” is lit, you have 30 seconds in which to perform step 7. Use the help of a second person for convenience to assist when performing this step.

7. Quickly within 30 seconds of pressing and releasing the garage door opener program button, firmly press and release the HomeLink® button you’ve just programmed. Press and release the HomeLink® button up to three times to complete the training.
8. Your HomeLink® button should now be programmed. (To program the remaining HomeLink® buttons for additional door or gate openers, follow steps 2 through 8 only.)

NOTE:

Do not repeat step one unless you want to “clear” all previously programmed HomeLink® buttons).

If you have any questions or are having difficulty programming your HomeLink® buttons, please refer to the HomeLink® web site at: www.homelink.com or call 1-800-662-6200.

PROGRAMMING HomeLink® FOR CANADIAN CUSTOMERS

Prior to 1992, D.O.C. regulations required hand-held transmitters to stop transmitting after 2 seconds. To program your hand-held transmitter to HomeLink®, continue to press and hold the HomeLink® button (note steps 2 through 4 under “Programming HomeLink®”) while you press and re-press (“cycle”) your hand-held transmitter every 2 seconds until the indicator

light flashes rapidly (indicating successful programming).

NOTE:

If programming a garage door opener, etc., it is advised to unplug the device during the "cycling" process to prevent possible damage to the garage door opener components.

OPERATING THE HomeLink® UNIVERSAL TRANSCEIVER

The HomeLink® Universal Transceiver (once programmed) may now be used to activate the garage door, etc. To operate, simply press the appropriate programmed HomeLink® Universal Transceiver button. The red indicator light will illuminate while the signal is being transmitted.

PROGRAMMING TROUBLE DIAGNOSIS

If the HomeLink® does not quickly learn the hand-held transmitter information:

- replace the hand-held transmitter batteries with new batteries.
- position the hand-held transmitter with its battery area facing away from the HomeLink® surface.
- press and hold both the HomeLink® and hand-held transmitter buttons without interruption.
- position the hand-held transmitter 2 to 5 inches (50 to 127 mm) away from the HomeLink® surface. Hold the transmitter in that position for up to 15 seconds. If HomeLink® is not programmed within that time, try holding the transmitter in another position - keeping the indicator light in view at all times.

If you continue to have programming difficulties, please contact the NISSAN Consumer Affairs Department. The phone numbers are located in the Foreword of this Owner's Manual.

CLEARING THE PROGRAMMED INFORMATION

Individual buttons cannot be cleared, however to clear all programming, press and hold the two outside buttons and release when the indicator light begins to flash (approximately 20 seconds).

REPROGRAMMING A SINGLE HomeLink® BUTTON

To reprogram a HomeLink® Universal Transceiver button, complete the following.

1. Press and hold the desired HomeLink® button. **Do not** release the button until step 4 has been completed.
2. When the indicator light begins to flash slowly (after 20 seconds), position the hand-held transmitter 2 to 5 inches (50 to 127 mm) away from the HomeLink® surface.
3. Press and hold the hand-held transmitter button.
4. The HomeLink® indicator light will flash, first slowly and then rapidly. When the indicator light begins to flash rapidly, release both buttons.

The HomeLink® Universal Transceiver button has now been reprogrammed. The new device can be activated by pushing the HomeLink® button that was just programmed. This procedure will not affect any other programmed HomeLink® buttons.

IF YOUR VEHICLE IS STOLEN

If your vehicle is stolen, you should change the codes of any non-rolling code device that has

been programmed into HomeLink®. Consult the Owner's Manual of each device or call the manufacturer or dealer of those devices for additional information.

When your vehicle is recovered, you will need to reprogram the HomeLink® Universal Transceiver with your new transmitter information.

FCC Notice:

This device complies with FCC rules part 15. Operation is subject to the following two conditions: (1) This device may not cause harmful interference and (2) This device must accept any interference that may be received, including interference that may cause undesired operation.

The transmitter has been tested and complies with FCC and DOC/MDC rules. Changes or modifications not expressly approved by the party responsible for compliance could void the user's authority to operate the device.

DOC: ISTC 1763K1313

FCC I.D.: CB2V67690

MEMO

MEMO

MEMO

3 Pre-driving checks and adjustments

Keys 3-2
Doors 3-2
Locking with key 3-3
Locking with inside lock knob 3-3
Locking with power door lock switch 3-4
Child safety rear door lock 3-4
Remote keyless entry system 3-4
How to use remote keyless entry system 3-5
Battery replacement 3-7
Hood 3-9
Back door 3-9
Fuel filler lid 3-11
Open the filler lid 3-11
Fuel filler cap 3-11
Steering wheel 3-13
Tilt operation 3-13
Pedal position adjustment 3-13
Sun visors 3-14
Mirrors 3-14
Inside mirror 3-14
Automatic anti-glare inside mirror (if so equipped) 3-15
Outside mirrors 3-15
Automatic drive positioner (if so equipped) 3-16
Automatic drive positioner operation 3-16
Procedure for storing memory 3-17

KEYS

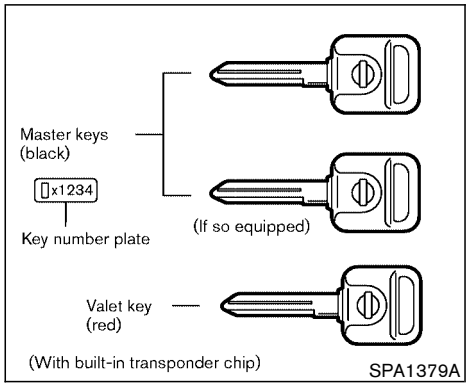

You can only drive your vehicle using the master or valet keys which are registered to the Nissan Vehicle Immobilizer System components in your vehicle. These keys have a transponder chip in the key head.

The master key can be used for all the locks.

The valet key cannot be used for the glove box and console lid locks.

To protect belongings when you leave a key with someone, give them the valet key only.

Never leave these keys in the vehicle.

Record the key number on the key number plate supplied with your keys and keep it in a safe place (such as your wallet), not in the vehicle. NISSAN does not record any key numbers so it is very important to keep track of your key number plate.

A key number is only necessary when you have lost all keys and do not have one to duplicate from. If you still have a key, this key can be duplicated by your NISSAN dealer.

Nissan Vehicle Immobilizer System KEY - Master and Valet keys:

The key number is necessary when you need extra Nissan Vehicle Immobilizer System keys. As many as 5 Nissan Vehicle Immobilizer System keys can be used with one vehicle. New keys must be registered to the Nissan Vehicle Immobilizer System components in your vehicle by your NISSAN dealer. At this time, you should bring all Nissan Vehicle Immobilizer System keys that you have to your NISSAN dealer for registration. This is because the registration process will erase all memory of the Nissan Vehicle Immobilizer System components.

DOORS

WARNING

- **Always have the doors locked while driving. Along with the use of seat belts, this provides greater safety in the event of an accident by helping to prevent persons from being thrown from the vehicle. This also helps keep children and others from unintentionally opening the doors, and will help keep out intruders.**
- **Before opening any door, always look for and avoid oncoming traffic.**
- **Do not leave children unattended inside the vehicle. They could unknowingly activate switches or controls. Unattended children could become involved in serious accidents.**

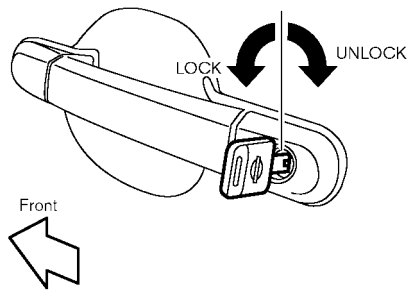

SPA1575

LOCKING WITH KEY

Power

The power door lock system allows you to lock or unlock all doors simultaneously.

- Turning the driver's door key to the front of the vehicle will lock all doors (including the back door) and fuel filler lid.
- Turning the driver's door key one time to the rear of the vehicle will unlock the driver's door. From that position, returning the key to neutral (where the key can only be removed and inserted) and turning it to the rear again within 5 seconds will unlock all doors and fuel filler lid.

Opening and closing front windows

Turn the driver's door key to the unlock position and hold for about 1 second, the front windows will begin to lower.

To stop opening, turn the key to the neutral position.

To close the front windows with the door key cylinder, turn the key to the lock position and hold for about 1 second.

To stop closing, turn the key to the neutral position.

In the event of a hand in the way, or other obstruction, the auto reverse function will activate.

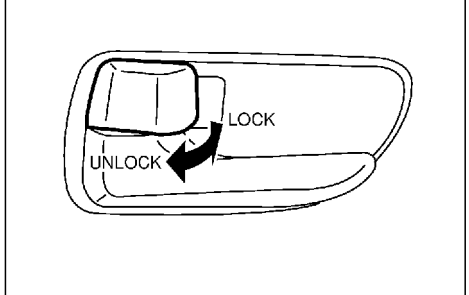

SPA1422

LOCKING WITH INSIDE LOCK KNOB

To individually lock the doors, move the inside lock knob to the LOCK position, then close the door. To unlock, pull up the inside lock knob to the UNLOCK position.

The front doors will automatically be unlocked and you can open the door by pulling the inside door handle.

When locking the door without a key, be sure not to leave the key inside the vehicle.

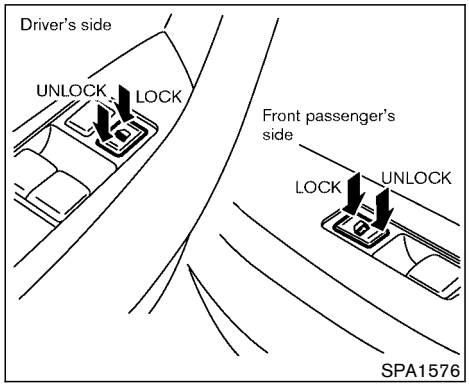

LOCKING WITH POWER DOOR LOCK SWITCH

All door and fuel filler lid locks will be engaged when the power door lock switch is moved to the LOCK position with the driver's or front passenger's door open. Then close the door and all doors will be locked.

When the power door lock switch is moved to the LOCK position with front doors open while a key is in the ignition switch, all doors will lock once and then unlock automatically.

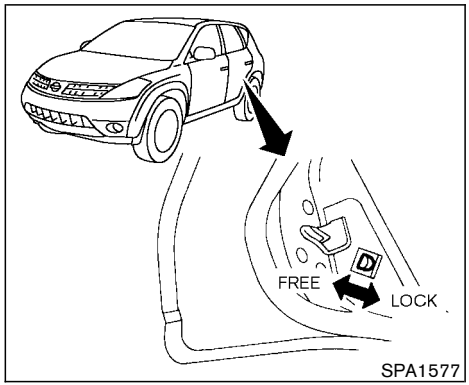

CHILD SAFETY REAR DOOR LOCK

Child safety locking helps prevent doors from being opened accidentally, especially when small children are in the vehicle.

When the lever is in the lock position, the rear door can be opened only from the outside.

REMOTE KEYLESS ENTRY SYSTEM

It is possible to lock/unlock all doors (including the back door) and fuel filler lid and activate the panic alarm by using the keyfob from outside the vehicle.

Before locking the doors, make sure the key is not left in the vehicle.

The keyfob can operate at a distance of approximately 33 ft (10 m) from the vehicle. (The effective distance depends upon the conditions around the vehicle.)

As many as five keyfobs can be used with one vehicle. For information concerning the purchase and use of additional keyfobs, contact your NISSAN dealer.

The keyfob will not function when:

- the battery is dead,
- the distance between the vehicle and the keyfob is over 33 ft (10 m).

The panic alarm will not activate when the key is in the ignition switch.

CAUTION

The following conditions or occurrences will damage the keyfob.

- **Do not allow the keyfob to become wet.**
- **Do not drop the keyfob.**
- **Do not strike the keyfob sharply against another object.**
- **Do not place the keyfob for an extended period in an area where temperatures exceed 140°F (60°C).**

If a keyfob is lost or stolen, NISSAN recommends erasing the ID code of that keyfob. This will prevent the keyfob from unauthorized use to unlock the vehicle. For information regarding the erasing procedure, please contact a NISSAN dealer.

HOW TO USE REMOTE KEYLESS ENTRY SYSTEM

Setting hazard indicator and horn mode

This vehicle is set in hazard indicator and horn mode when you first receive the vehicle.

In hazard indicator and horn mode, when the LOCK button is pushed, the hazard indicator flashes twice and the horn chirps once. When the UNLOCK button is pushed, the hazard indicator flashes once.

If hazard indicator and horn mode is not necessary, you can switch to hazard indicator only mode by following the switching procedure.

In hazard indicator only mode, when the LOCK button is pushed, the hazard indicator flashes twice. When the UNLOCK button is pushed, neither the hazard indicator nor the horn operates.

(Switching procedure)

Push the LOCK and UNLOCK buttons on the keyfob simultaneously for more than 2 seconds to switch from one mode to the other.

When pushing the buttons to set hazard indicator only mode, the hazard indicator flashes 3 times.

When pushing the buttons to set hazard indicator and horn mode, the hazard indicator flashes once and the horn chirps once.

OPERATION GUIDE

MODE (Push "LOCK" and "UNLOCK" buttons for more than 2 seconds to switch)		Switching indicator	LOCK	UNLOCK
Hazard indicator and horn →	HAZARD INDICATOR ONLY	HAZARD – 3 times	HAZARD – twice	No operation
Hazard indicator only →	HAZARD INDICATOR AND HORN	HAZARD – once HORN – once	HAZARD – twice HORN – once	HAZARD – once

SPA1260

Locking doors and fuel filler lid

1. Remove the ignition key.*1
2. Close all the doors and fuel filler lid.*2
3. Push the LOCK button on the keyfob.
4. All the doors and fuel filler lid will lock.

All of the doors will lock when the LOCK button on the keyfob is pushed even though a door remains open and/or the ignition key is in the ON position.

5. The hazard indicator flashes twice and the horn chirps once.

- When the LOCK button is pushed with all doors and fuel filler lid locked, the hazard indicator flashes twice and the horn chirps once as a reminder that the doors and fuel filler lid are already locked.

*1: Doors and fuel filler lid lock with the keyfob while a key is in the ignition switch. However, the panic alarm will not activate when the key is in the ignition switch.

*2: Doors and fuel filler lid lock with the keyfob while any door is open. However, hazard indicator and horn mode will not function.

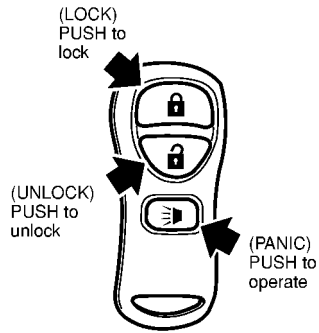

SPA1397

Unlocking doors

1. Push the UNLOCK button on the keyfob once.

- The driver's door and fuel filler lid unlocks
- The hazard indicator flashes once if all doors and fuel filler lid are completely closed with the ignition key in any position except the ON position.
- The interior light turns on and the light timer activates for 30 seconds when the switch is in the DOOR position with the ignition key in any position except the ON position.

2. Push the UNLOCK button on the keyfob again within 5 seconds.

- All doors unlock
- The hazard indicator flashes once if all doors are completely closed.

If the following operation is not carried out within 1 minute after pressing the UNLOCK button, all doors will be locked automatically.

- **any door is opened.**
- **the ignition key is turned to the ON position**

The interior light can be turned off without waiting for 30 seconds by turning the ignition switch to the ON position or by locking the doors with the keyfob.

Opening the front window

Push the UNLOCK button on the keyfob.

The driver's door will unlock.

Continue to press the UNLOCK button for 3 seconds. The driver's and front passenger's windows will be lowered.

Continue to press the UNLOCK button until windows are fully open.

To stop lowering the windows, release the UNLOCK button.

To start lowering the windows, press the UNLOCK button again for 3 more seconds.

This function will operate after the ignition switch is off and 45 seconds passed or either the front door is opened.

Using the panic alarm

If you are near your vehicle and feel threatened, you may activate the alarm to call attention as follows:

1. Push the PANIC button on the keyfob for **longer than 0.5 seconds.**
2. The theft warning alarm and headlights will stay on for 30 seconds.
3. The panic alarm stops when:

- It has run for 30 seconds, or
- The LOCK or the UNLOCK button is pressed, or
- The panic button is pushed on the keyfob for more than 0.5 seconds.

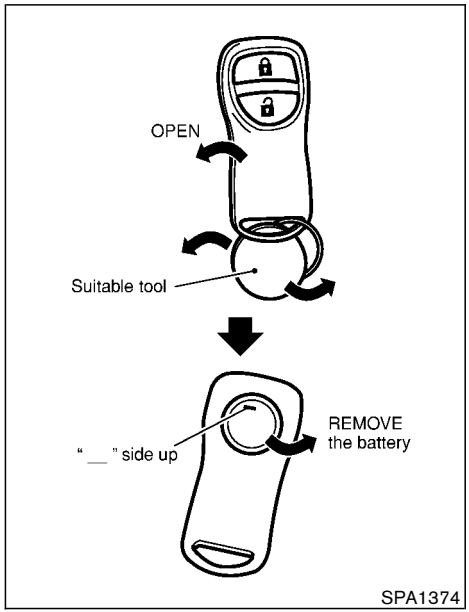

BATTERY REPLACEMENT

Replace the battery as follows:

1. Open the lid using a suitable tool.
2. Replace the battery with a new one.

Recommended battery: Sanyo CR2025 or equivalent

Make sure that the ⊕ side faces the bottom case.

3. Close the lid securely.
4. Push the keyfob button two or three times to check its operation.

See your NISSAN dealer if you need any assistance for replacement.

If the battery is removed for any reason other than replacement, perform the step 4 above.

- **Be careful not to touch a circuit board and a battery terminal.**
- **An improperly disposed battery can harm the environment. Always confirm local regulations for battery disposal.**
- **The keyfob is water-resistant; however, if it does get wet, immediately wipe completely dry.**
- **When changing batteries, do not let dust or oil get on the keyfob.**

FCC Notice:

Changes or modifications not expressly approved by the manufacturer compliance could void the user's authority to operate the equipment. This device complies with Part 15 of the FCC Rules and RSS-210 of Industry Canada. Operation is subject to the following two conditions: (1) This device may not cause harmful interference, and (2) this device must accept any interference received, including interference that may cause undesired operation of the device.

HOOD

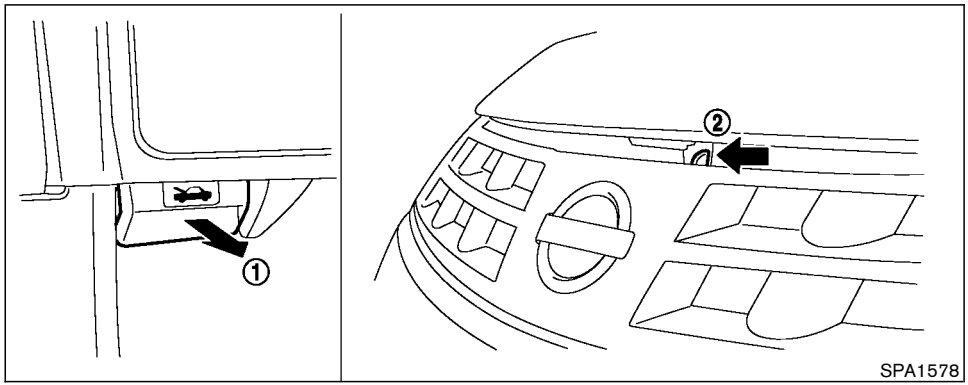

1. Pull the hood lock release handle (1) located below the instrument panel; the hood will then spring up slightly.
2. Move the lever (2) at the front of the hood with your fingertips and raise the hood.
3. When closing the hood, slowly close the hood and make sure it locks into place.

WARNING

- **Make sure the hood is completely closed and latched before driving. Failure to do so could cause the hood to fly open and result in an accident.**
- **If you see steam or smoke coming from the engine compartment, to avoid injury do not open the hood.**

BACK DOOR

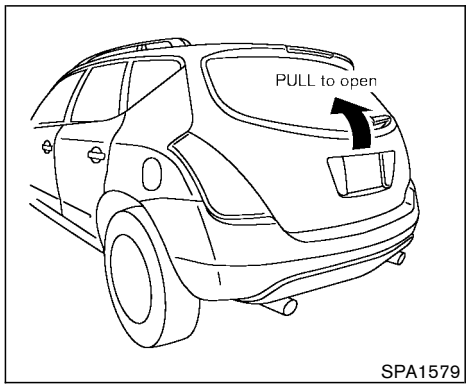

- The power door lock system allows you to lock or unlock all doors including the back door simultaneously.
- Pull the opener handle to open the back door.

WARNING

Do not drive with the back door open. This could allow dangerous exhaust gases to be drawn into the vehicle. See "Precautions when starting and driving" in the "5. Starting and driving" section

for exhaust gas.

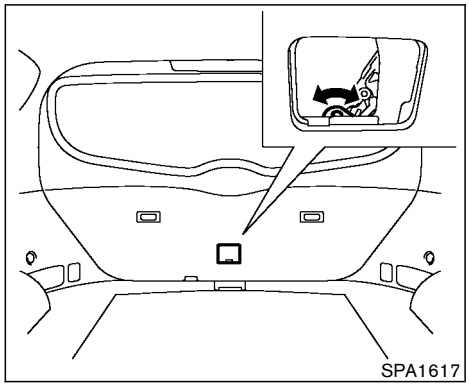

To lock or unlock the back door

If the back door cannot be locked or unlocked with the door lock switch or remote controller due to a discharged battery, follow the next steps.

1. Remove the cover inside of the back door with a suitable tool.
2. Move the lever as illustrated to lock or unlock.

Contact your NISSAN dealer as soon as possible.

WARNING

- **Always check the back door has been closed securely to prevent it from opening while driving.**
- **Do not drive with the back door open. This could allow dangerous exhaust gases to be drawn into the vehicle.**

FUEL FILLER LID

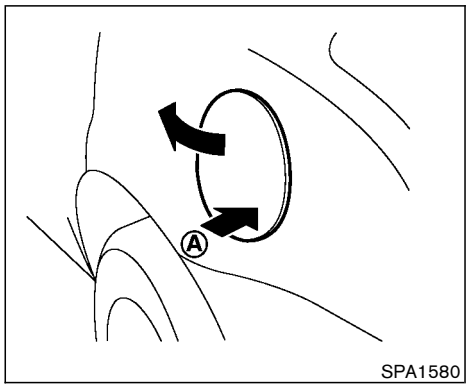

SPA1580

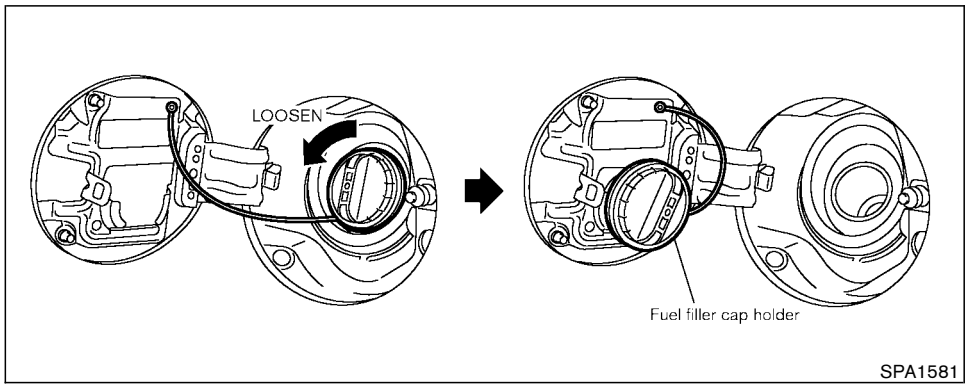

SPA1581

OPEN THE FILLER LID

To open the fuel filler lid, unlock it using one of the following operations, then push the right-hand side of the lid (A).

- Press the unlock button on the keyfob once.
- Insert the key into the door lock cylinder and turn the door key clockwise twice.
- Press the power door lock switch to the unlock side.

To lock, close the fuel filler lid and lock the doors.

FUEL FILLER CAP

The fuel filler cap is a ratcheting type. Tighten the cap clockwise until ratcheting clicks are heard.

Put the fuel filler cap on the cap holder while refueling.

WARNING

- **Gasoline is extremely flammable and highly explosive under certain conditions. You could be burned or seriously injured if it is misused or mishandled. Always stop the engine and do not smoke or allow open flames or sparks near the vehicle when refueling.**
- **Fuel may be under pressure. Turn the cap a quarter turn, and wait for any hissing sound to stop to prevent fuel from spraying out and possible personal injury. Then remove the cap.**
- **Do not attempt to top off the fuel**

tank after the fuel pump nozzle shuts off automatically.
Continued refueling may cause fuel overflow, resulting in fuel spray and possibly a fire.

- Use only an original equipment type fuel filler cap as a replacement. It has a built-in safety valve needed for proper operation of the fuel system and emission control system. An incorrect cap can result in a serious malfunction and possible injury. It could also cause the SERVICE ENGINE SOON malfunction indicator lamp to come on.
- Do not fill a portable fuel container in the vehicle or trailer. Static electricity can cause an explosion of flammable liquid, vapor or gas in any vehicle or trailer. To reduce the risk of serious injury or death when filling portable fuel containers:
  - Always place the container on the ground when filling.
  - Do not use electronic devices while filling.
  - Keep the pump nozzle in contact with the container while you are filling it.
  - Use only approved portable fuel containers for flammable liquid.
- Never pour fuel into the throttle body to attempt to start your vehicle.

CAUTION

- If fuel is spilled on the car body, flush it away with water to avoid paint damage.
- Tighten until the fuel filler cap clicks. Failure to tighten the fuel filler cap properly may cause the SERVICE ENGINE SOON malfunction indicator lamp (MIL) to illuminate. If the SERVICE ENGINE SOON lamp illuminates because the fuel filler cap is loose or missing, tighten or install the cap and continue to drive the vehicle. The SERVICE ENGINE SOON lamp should turn off after a few driving trips. If the SERVICE ENGINE SOON lamp does not turn off after a few driving trips, have the vehicle inspected by an authorized NISSAN dealer.
- For additional information, see the “Malfunction indicator lamp (MIL)” in the “2. Instruments and controls” section.

STEERING WHEEL

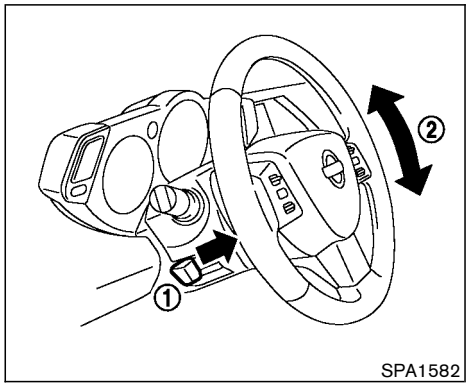

SPA1582

TILT OPERATION

The steering wheel will pop up when the lock lever is pulled as illustrated (1).

Keep holding the lock lever and adjust the steering wheel to the desired position (2).

Release the lock lever to lock the steering wheel.

WARNING

- **Do not adjust the steering wheel while driving. You could lose control of your vehicle and cause an accident.**
- **Do not put anything on or near the steering wheel when tilting.**

PEDAL POSITION ADJUSTMENT

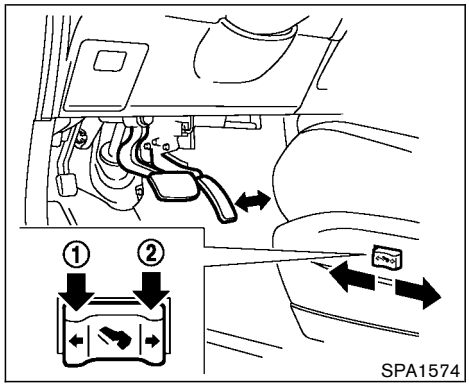

SPA1574

The accelerator and brake pedals can be adjusted for driving comfort.

Use the pedal adjusting switch to adjust the brake and accelerator pedal position forward (1) or backward (2). Pedal adjustment can only be performed when:

- Ignition switch is in the OFF or ACC position, or
- Ignition switch is ON and the selector lever is in the P (Park) position

The brake and accelerator pedals cannot be adjusted separately.

CAUTION

Do not adjust the pedal position with your foot on the pedal.

SUN VISORS

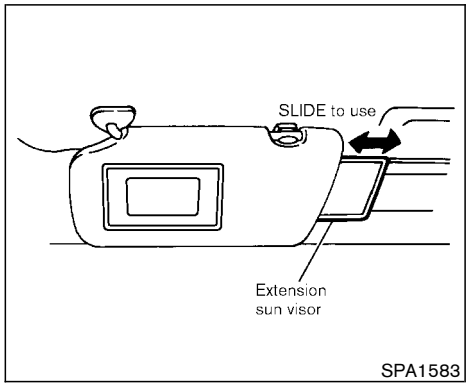

CAUTION

Store the main sun visor after storing the extension sun visor.

MIRRORS

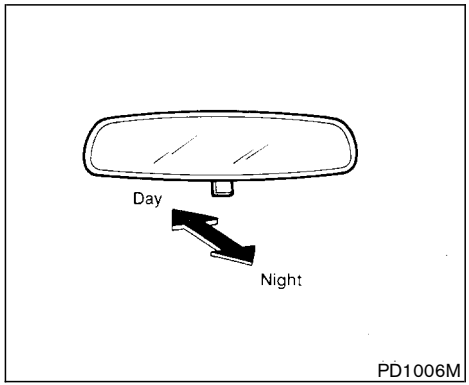

INSIDE MIRROR

The night position will reduce glare from the headlights of vehicles behind you at night.

WARNING

Use the night position only when necessary, because it reduces rear view clarity.

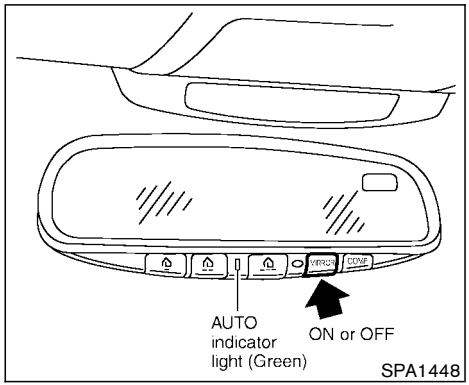

AUTOMATIC ANTI-GLARE INSIDE MIRROR (if so equipped)

WARNING

Use Automatic Anti-glare only when necessary, because it reduces rear view clarity.

The inside mirror is designed so that it automatically changes reflection according to the intensity of the headlights of the vehicle following you.

When the inside MIRROR switch is in the ON position (The Auto indicator light will illuminate), excessive glare from the headlights of the vehicle behind you will be reduced. When the switch of the inside mirror is in the OFF position, the inside mirror will operate normally.

For the HomeLink® Universal Transceiver and the compass display, see the description in the "2. Instruments and controls" section.

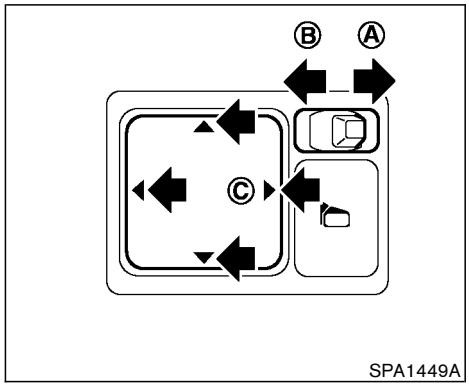

OUTSIDE MIRRORS

WARNING

Objects viewed in the outside mirror on the passenger side are closer than they appear. Be careful when moving to the right. Using only this mirror could cause an accident. Use inside mirror or glance over your shoulder to properly judge distances to other objects.

The outside mirror will operate only when the

ignition switch is in the ACC or ON position.

Move the switch to right Ⓐ or left Ⓑ to select the right or left outside mirror, then adjust the mirror to the desired position by pushing the button Ⓒ.

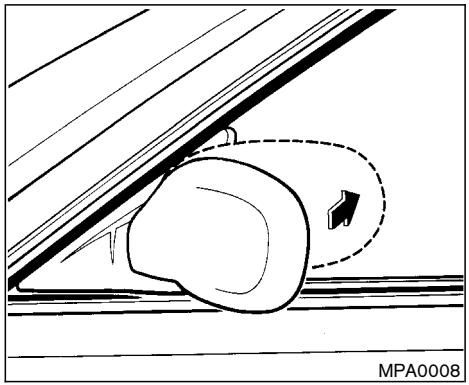

Foldable outside mirrors

Push the outside mirror backward to fold it.

AUTOMATIC DRIVE POSITIONER (if so equipped)

AUTOMATIC DRIVE POSITIONER OPERATION

This system is designed so that the driver's seat, outside mirror and pedals (Brake, Accelerator) will automatically move when the selector lever is in the P (Park) position. This allows the driver to get in and out of the driver's seat more easily.

When one of the following conditions is met, the driver's seat will slide backward while the selector lever is in the P (Park) position:

- When the key is removed from the ignition switch.
- When the driver's door is opened with the key turned to LOCK.
- When the key is turned from ACC to LOCK with the driver's door open.

When one of the following conditions is met while the selector lever is in the P (Park) position, the driver's seat will return to the positions before being set.

- When the key is inserted into the ignition switch.
- When the driver's door is closed with the key turned to LOCK.
- When the key is turned from ACC to ON.

PROCEDURE FOR STORING MEMORY

Two positions can be stored in the automatic drive positioner memory. **Follow these procedures to use the memory system.**

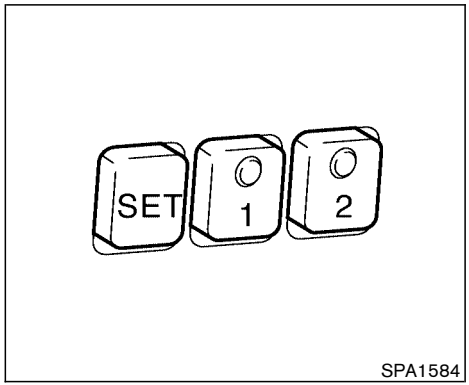

1. Set the selector lever to the P (Park) position.
2. Turn the ignition ON.
3. Adjust the driver's seat, outside mirrors and pedals to the desired positions by manually operating each adjusting switch. For additional information, see "Seats" in the "1. Seats, restraints and supplemental air bag systems" section and "Pedal position adjustment" earlier in this section.

   During this step, do not turn the ignition to any positions other than ON.
4. Push the SET switch and, within 5 seconds, push the memory switch 1 or 2 fully for at least 1 second.

   The indicator light for the pushed memory switch will come on and stay on for approximately 5 seconds after pushing the switch. After the indicator light goes off, the selected positions are stored in the selected memory (1 or 2). Pushing the unlock button on the keyfob within this 5 seconds, will link the selected memory to the keyfob.

   When the link is completed, the indicator light of the selected memory switch will blink for approximately 5 seconds.

   When you unlock the door with the link completed keyfob, the driver's seat will move back and move to the memorized position.

   If memory is stored in the same memory switch, the previous memory and the memory which is linked to the keyfob, will be deleted.

Confirming memory storage

- Turn the ignition ON and push the SET switch. If the main memory has not been stored, the indicator light will come on for approximately 0.5 seconds. When the memory has stored the position, the indicator light will stay on for approximately 5 seconds.
- If the battery cable is disconnected, or if the

fuse blows, the memory will be canceled. In such a case, reset the desired positions using the following procedures.

1. Open and close the driver's door more than two times with the ignition key in the LOCK position.
2. Reset the desired position using the previous procedure.

Selecting the memorized position

1. Set the selector lever to the P (Park) position.
2. Turn the ignition ON.
3. Push the memory switch 1 or 2 fully for at least 1 second.

   The driver's seat, pedals and outside mirror will move to the memorized position with the indicator light flashing. Then the light will stay on for approximately 5 seconds.

Cancellation of the system

The automatic drive positioner system can be canceled.

See "4. Display screen, heater, air conditioner and audio systems" section.

System operation

The automatic drive positioner system will not work or will stop operating under the following conditions:

- when the vehicle speed is above 4 MPH (7 km/h).
- when either of the memory switches is pressed while the automatic drive positioner is operating.
- when the adjusting switch for the driver's seat, pedal or outside mirror is turned on while the automatic drive positioner is operating.
- when the memory switch 1 or 2 is not pushed for at least 1 second.
- when the seat, pedal and outside mirror has already been moved to the memorized position.
- when no seat position is stored in the memory switch.

MEMO

MEMO

4 Display screen, heater, air conditioner and audio systems

Safety note 4-2
Control panel buttons — without navigation system 4-2
Names of the components 4-3
How to use joystick and “ENTER” button 4-3
How to use “PREV” button 4-3
How to use “TRIP” button 4-3
How to use “FUEL ECON” button 4-4
Clock 4-4
How to use “E/M” button 4-4
How to use “MAINT” (Maintenance) button 4-5
How to use “SETTING” button 4-5
“DAY/NIGHT” button 4-6
Control panel buttons — with navigation system 4-7
Names of the components 4-8
How to use joystick and “ENTER” button 4-8
How to use “PREV” button 4-8
Setting up the start-up screen 4-8
How to use the “TRIP” button 4-8
How to use the “SETTING” button 4-10
“DAY/NIGHT” button 4-14
Ventilators 4-14
Heater and air conditioner (Automatic) 4-15
Automatic operation 4-16
Manual operation 4-17
Operating tips 4-17
In-cabin microfilter 4-18
Servicing air conditioner 4-18
Audio system 4-19
FM radio reception 4-19
AM radio reception 4-20
Satellite radio reception 4-20
Audio operation precautions 4-20
FM-AM radio with cassette player and compact disc (CD) player (Type A)/CD changer (Type B) 4-23
CD care and cleaning 4-29
Steering switch for audio control (if so equipped) 4-30
Antenna 4-31
Car phone or CB radio 4-31

SAFETY NOTE

WARNING

- **Positioning of the heating or air conditioning controls and display controls should not be done while driving, in order that full attention may be given to the driving operation.**
- **Do not disassemble or modify this system. If you do, it may result in accidents, fire, or electrical shock.**
- **Do not use this system if you notice any abnormality, such as a frozen screen or lack of sound. Continued use of the system may result in accident, fire or electric shock.**
- **In case you notice any foreign object in the system hardware, spill liquid on it, or notice smoke or smell coming from it, stop using the system immediately and contact your nearest NISSAN dealer. Ignoring such conditions may lead to accidents, fire, or electric shock.**

CONTROL PANEL BUTTONS — WITHOUT NAVIGATION SYSTEM

Model without Navigation system

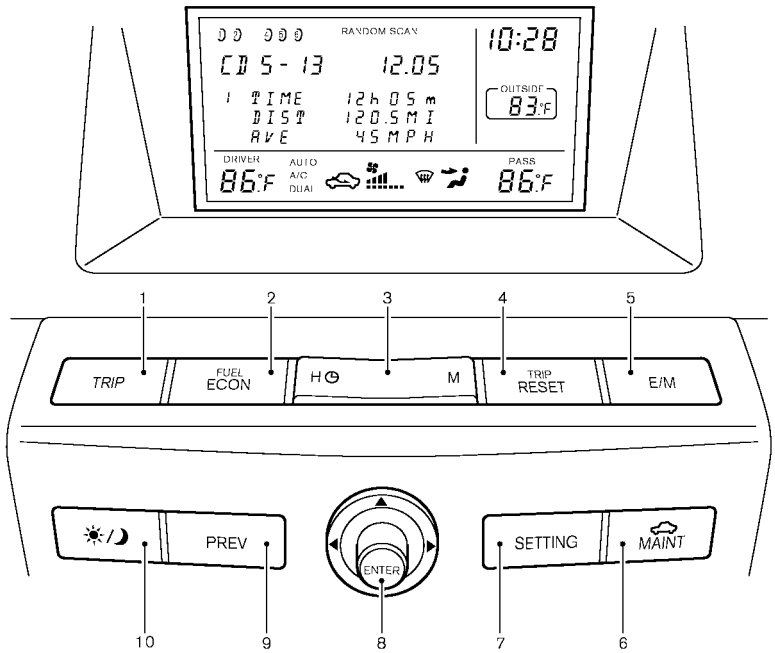

SAA0643

When you use this system, make sure the engine is running.

If you use the system with the engine not running (ignition ON or ACC) for a long time, it will use up all the battery power, and the engine will not start.

Reference symbols:

“ENTER” button

This is a button on the control panel.

“Display” key

This is a select key on the screen. By selecting this key you can proceed to the next function.

NAMES OF THE COMPONENTS

1. “TRIP” drive computer button; refer to page 4-3.
2. “FUEL ECON” button; refer to page 4-4.
3. Clock adjust button; refer to page 4-3.
4. “TRIP RESET” button; refer to page 4-3.
5. “E/M” button; refer to page 4-4.
6. “MAINT” maintenance button; refer to page 4-5.
7. “SETTING” button; refer to page 4-6.
8. JOYSTICK and “ENTER” push button; refer to page 4-3.
9. “PREV” previous button; refer to page 4-3.
10. “DAY/NIGHT” brightness control button; refer to page 4-6.

To turn off the screen, push the “DAY/NIGHT” button for more than approximately 1.5 seconds. The screen will change to “CONFIRM DISPLAY OFF YES or NO”.

HOW TO USE JOYSTICK AND “ENTER” BUTTON

Choose an item on the display using the joystick. Push the “**ENTER**” button only when the use of it is instructed on the display.

HOW TO USE “PREV” BUTTON

Finish setup:

If you touch **“PREV”** button after the setup is completed, the setup will start over.

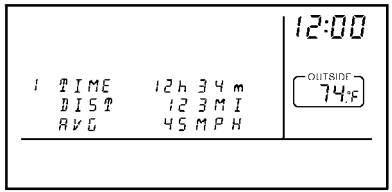

SAA0644

HOW TO USE “TRIP” BUTTON

When the “TRIP” button is pushed, the following modes will display on the screen.

TRIP 1 (TIME, DIST, AVG) → TRIP 2 (TIME, DIST, AVG) → OFF

You can set the two kinds of journey time (TIME — max 99 hours 59 minutes), trip odometer (DIST — mile or km) and average speed (AVG — MPH or km/h).

To reset the TRIP 1 or TRIP 2, push the “TRIP” button or the “TRIP RESET” button for more than approximately 1.5 seconds.

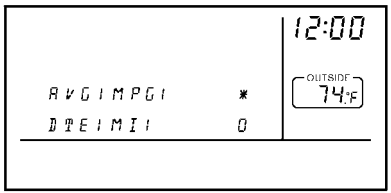

SAA0645

HOW TO USE “FUEL ECON” BUTTON

The average fuel consumption (MPG or L/100 km) and the distance to empty (dte — MI or km) will appear on the screen when the “FUEL ECON” button is pushed.

Average fuel consumption (Mpg or L/100 km)

The average fuel consumption mode shows the average fuel consumption since the last reset. Resetting is done by pressing the “TRIP RESET” or “FUEL ECON” button for more than approximately 1.5 seconds.

The display is updated every 30 seconds. At about the first 30 seconds and 1/3 miles (500 m) after a reset or connecting battery cable, the display will show (----).

Distance to empty (dte — mile or km)

The distance to empty (dte) mode provides you with an estimation of the distance that can be driven before refueling. The dte is constantly being calculated, based on the amount of fuel in the fuel tank and the actual fuel consumption.

The display is updated every 30 seconds.

When the fuel level drops even lower, the dte display will change to (*).

NOTE:

- **If the amount of fuel added while the ignition switch is OFF is small, the display just before the ignition switch is turned OFF may continue to be displayed.**
- **When driving uphill or rounding curves, the fuel in the tank shifts, which may momentarily change the display.**

CLOCK

The digital clock displays time when the ignition key is in ACC or ON.

If the power supply is disconnected, the clock will not indicate the correct time. Readjust the time.

Adjusting the time

To adjust the time, push the “H” or “M” button for more than approximately 1.5 seconds. The time indicator will flash.

Touch the **H** button to adjust the hour.

Touch the **M** button to adjust the minute.

To finish the adjusting, press the “PREV” button or the screen will return to normal after 10 seconds.

HOW TO USE “E/M” BUTTON

You can change the unit as follows using the “E/M” (English/Metric) button.

Unit: US — Mile, °F, MPG
Metric — km, °C, L/100 km

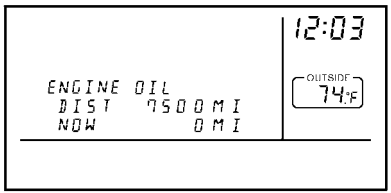

SAA0646

HOW TO USE “MAINT” (Maintenance) BUTTON

Pushing the “MAINT” button will change the maintenance menu as follows:

ENGINE OIL → TIRE ROTATION → TIRE PRESSURE (if so equipped)

To reset the driving distance, push the “MAINT” button or “TRIP RESET” button for more than approximately 1.5 seconds.

To set the distance, push the joystick to left or right.

SAA0647

Tire pressure information (if so equipped)

Pressure indication in ** psi on the screen indicates that the pressure is being measured. After a few driving trips, the pressure for each tire will be displayed randomly.

The order of tire pressure figures displayed on the screen does not correspond with the actual order of the tire position.

Tire pressure rises and falls depending on the heat caused by the vehicle’s traveling condition and the temperature.

In case of flat tire, a message (FLAT TIRE or CHECK ALL TIRE) is displayed on the screen:

FLAT TIRE — very low tire air pressure.

WARNING

When a spare tire is mounted or a wheel is replaced, the pressure of that tire will not be indicated and not be monitored by the low tire pressure warning system. Contact your NISSAN dealer as soon as possible for tire replacement and/or system resetting.

HOW TO USE “SETTING” BUTTON

Pushing the “SETTING” button will change the settings menu as follows:

1. DISPLAY ON/OFF
2. LANGUAGE
3. BEEP SET
4. SERVICE ALERT
5. PERSONALIZED SETTINGS MENU — if so equipped

Display ON/OFF

To turn off the screen, select the OFF key of the "Display ON/OFF" using the joystick.

The screen will change to "CONFIRM DISPLAY OFF YES or NO".

If YES key is selected using the joystick, the screen will turn off after 2 beep sound and approximately 1 second.

To turn on the screen, push the "SETTING", trip control, air conditioner (except rear window defroster button) or audio button.

Language

The language can be changed to "English" or "Français" using the joystick.

Beep set

If the beep set "OFF" key is selected using the joystick, the beep sound will not operate. (except some caution beep sounds)

Service alert

If the service alert "ON" key is selected, the information will be operated when the engine oil and the tire rotation reaches the preset driving distance.

Personalized setting menu (if so equipped)

You can set the electronic systems as follows using the joystick.

Slide back DR seat on exit:

The driver's seat automatically moves back and returns to the original position for exceptional ease of exit and entry.

Return all settings to default:

When this key is selected and turned on using the joystick, all settings made by personalized setting menu will return to the initial conditions.

"DAY/NIGHT" BUTTON

To change the display brightness, push the "DAY/NIGHT" button. Pushing the button again will change the display to DAY or NIGHT display. Then, adjust the brightness moving the joystick right or left.

If no operation is done within 10 seconds, or if the "PREV" button is pushed, the display will return to the previous display.

CONTROL PANEL BUTTONS — WITH NAVIGATION SYSTEM

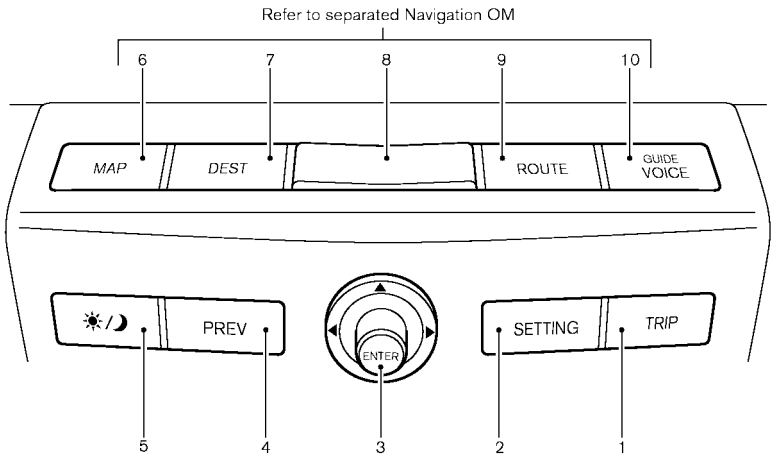

When you use this system, make sure the engine is running.

If you use the system with the engine not running (ignition ON or ACC) for a long time, it will use up all the battery power, and the engine will not start.

Reference symbols:

“ENTER” button

This is a button on the control panel.

“Display” key

This is a select key on the screen. By selecting this key you can proceed to the next function.

NAMES OF THE COMPONENTS

1. “TRIP” drive computer button; refer to page 4-8.
2. “SETTING” button; refer to page 4-10.
3. Joystick and “ENTER” push button; refer to page 4-8.
4. “PREV” previous button; refer to page 4-8.
5. “DAY/NIGHT” brightness control button; refer to page 4-14.

6 - 10. For Navigation system control buttons; refer to the separate Navigation Owner’s Manual.

HOW TO USE JOYSTICK AND “ENTER” BUTTON

Choose an item on the display using the joystick and push the “ENTER” button for operation.

HOW TO USE “PREV” BUTTON

This has two functions.

- Go back to the previous display (cancel).

If you touch “PREV” button during setup, the setup will be canceled and/or the display will return to the previous screen.

- Finish setup.

If you touch this button after the setup is completed, the setup will start over, and the display will return to the climate control or Audio mode, and Navigation screen.

SETTING UP THE START-UP SCREEN

When you turn the ignition key to ACC, the SYSTEM START-UP warning is displayed on the screen. Read the warning and select the “I AGREE” (English) or “ENTER” (Français) key then push the “ENTER” button.

If you do not push the “ENTER” button, this system will not proceed to the next step display.

If you do not touch the button or screen key for more than 1 minute on the TRIP, SETTING or START-UP screen, the screen will change to TRIP screen automatically.

To proceed to the next step, refer to the separate Navigation system Owner’s Manual.

HOW TO USE THE “TRIP” BUTTON

When the “TRIP” button is pushed, the following models will display on the screen.

Warning message (if there are any) → TRIP 1 (Elapsed Time, Driving Distance, Average Speed) → TRIP 2 → FUEL ECONOMY (Average Fuel Economy, Distance to Empty) →

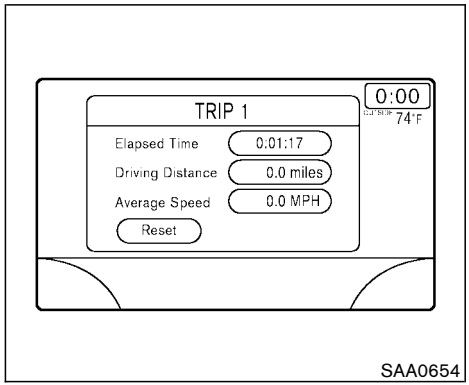

MAINTENANCE (Engine Oil, Tire Rotation and Tire Pressure — if so equipped) → OFF.

Trip 1, trip 2 and fuel economy items

To reset the TRIP 1, TRIP 2 and FUEL ECONOMY, select the “RESET” key using the joystick and push the “ENTER” button or push the “TRIP” button for more than approximately 1.5 seconds.

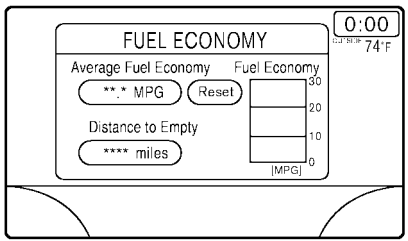

SAA0695

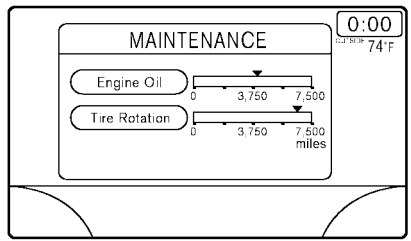

SAA0655

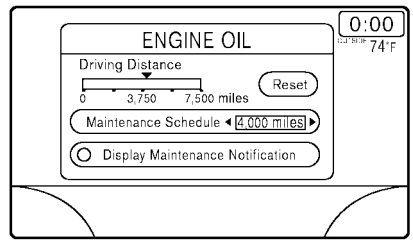

SAA0656

Maintenance items

You can set the engine oil and the tire rotation interval.

And the tire pressure will appear on the screen (if the tire pressure system is equipped).

To display the setting of the maintenance interval, select the “Engine Oil” or “Tire Rotation” key using the joystick and push the “ENTER” button.

To set the maintenance interval, select the “Maintenance Schedule” key by using the joystick and push the joystick to right or left.

To reset the maintenance interval, select the “RESET” key using the joystick and push the “ENTER” button.

To display the MAINTENANCE INFORMATION, automatically when setting trip distance is reached, select the “Display Maintenance Notification” key and push the “ENTER” button.

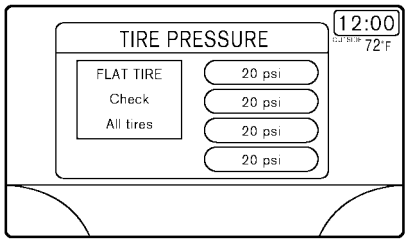

SAA0657

Tire pressure information (if so equipped)

Pressure indication in ** psi on the screen indicates that the pressure is being measured. After a few driving trips, the pressure for each tire will be displayed randomly.

The order of tire pressure figures displayed on the screen does not correspond with the actual order of the tire position.

Tire pressure rises and falls depending on the heat caused by the vehicle's traveling condition and the temperature.

In case of flat tire, a message is displayed on the screen:

FLAT TIRE — very low tire air pressure.

WARNING

When a spare tire is mounted or a wheel is replaced, the pressure of that tire will not be indicated and not be monitored by the low tire pressure warning system. Contact your NISSAN dealer as soon as possible for tire replacement and/or system resetting.

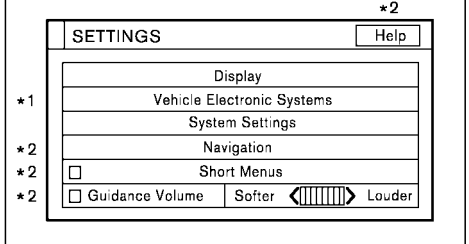

SAA0649

For models with navigation system:

*1 — if so equipped. (Automatic drive positioner)

*2 — Please refer to the separate Navigation system Owner's Manual.

HOW TO USE THE "SETTING" BUTTON

The SETTING screen will appear when the "SETTING" button is pushed.

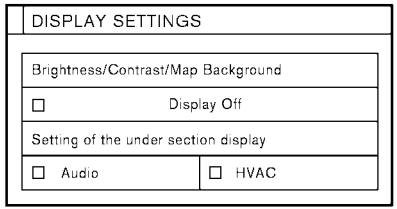

SAA0652

“Display” settings

The DISPLAY SETTINGS screen will appear when pushing the “SETTING” button, selecting “Display” key and pushing the “ENTER” button.

Brightness/Contrast/Map Background:

To adjust the brightness and contrast of the screen, select the “Brightness/contrast” key and push the “ENTER” button. Then you can adjust the brightness to Darker or Brighter, the contrast to Lower or Higher using the joystick.

The Map Background is for models with navigation system. Please refer to the separate navigation system Owner’s Manual.

Display Off:

To turn off the screen, push the “SETTING” button and select the “Display” key and “Display Off” key. The indicator of the “Display Off” will turn on to amber. When any mode button is pushed with the screen off, the screen turns on for further operation. The screen will turn off automatically 5 seconds after the operation is finished on the map display in the Audio, HVAC (Heater and air conditioner), SETTING or VEHICLE INFO. modes.

To turn on the screen, push the “SETTING” button and select the “Display” key and “Display Off” key, then set the screen to on by pushing the “ENTER” button.

Setting Audio or HVAC display:

Choose the **“Audio” or “HVAC” (Heater and air conditioner)** key to be displayed at the bottom, by using the joystick. The audio or HVAC (heater, air conditioner) setting condition will normally appear on the screen.

To return to the setting screen, push the “SETTING” button or “PREV” button.

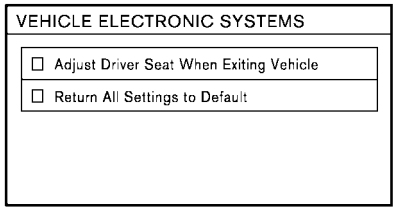

SAA0653

Vehicle electronic systems (if so equipped)

The VEHICLE ELECTRONIC SYSTEMS screen will appear when selecting the “**Vehicle Electronic Systems**” key with the joystick and pushing the “**ENTER**” button.

You can set the various electronic systems operating conditions.

To set an operating condition, select the applicable item using the joystick, and push the “**ENTER**” button.

The indicator light alternately turns on and off each time the “**ENTER**” button is pressed.

Indicator light is illuminated. — ON
Indicator light is not illuminated. — OFF

Adjust driver seat when exiting vehicle (if so equipped):

The driver's seat automatically moves back and returns to the original position for exceptional ease of exit and entry.

Return all settings to default:

When this key is selected and turned on using the "ENTER" button, all settings made by VEHICLE ELECTRONICS will return to the initial conditions.

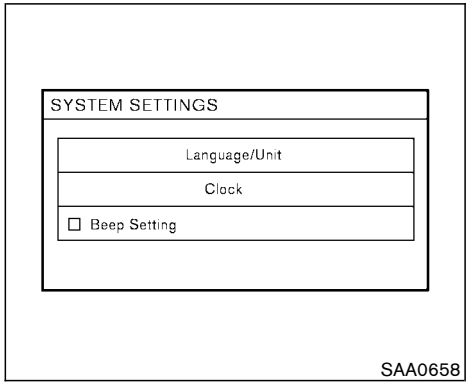

System settings

Language/Unit:

The LANGUAGE/UNIT screen will appear when selecting the "Language/Unit" key and pushing the "ENTER" button.

Language: English or French

Unit: US — Mile, °F, MPG
Metric — km, °C, L/100 km

You can select the language and unit using the joystick and "ENTER" button.

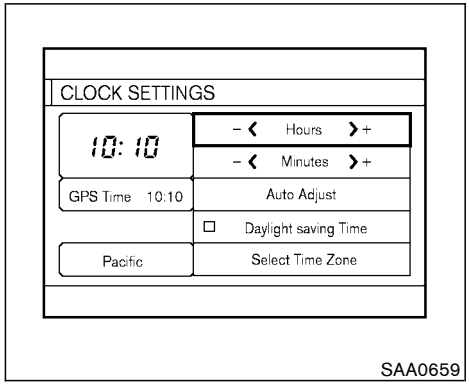

Clock:

Adjusting the time

Select the "Hours" or "Minutes" key and tilt the joystick to the right or left to adjust the time.

The time will change step by step.

After completion of the setting, press the "PREVIOUS" button.

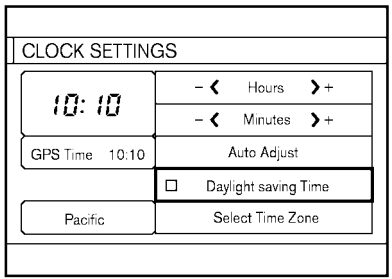

SAA0660

Setting daylight saving time

Turn ON or OFF daylight saving time.

Every time the “Daylight Saving Time” key is selected, the light turns ON and OFF alternately.

ON: The displayed time advances by one hour.

OFF: The current time is displayed.

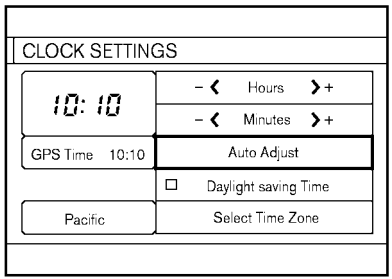

SAA0661

Adjusting the time to the GPS

Select the “Auto Adjust” key.

The time will be reset to the GPS time.

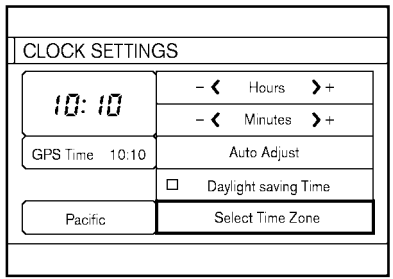

SAA0662

Selecting the time zone

1. Select the “Select Time Zone” key.

The [TIME ZONE] screen will appear.

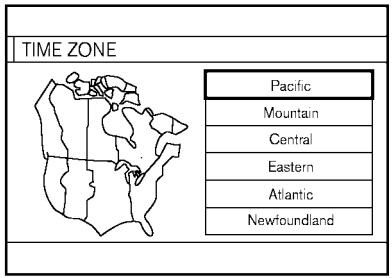

SAA0663

2. Select one of the following zones depending on the current location.

- “Pacific” zone
- “Mountain” zone
- “Central” zone
- “Eastern” zone
- “Atlantic” zone
- “Newfoundland” zone

After selection, the [CLOCK SETTINGS] screen will appear.

The GPS time (manual time) corresponding to the selected zone will be displayed.

“Pacific” zone has been set as the initial (default) setting.

Beep setting:

When Beep setting is on (indicator light on), a beep will sound if any audio button is pushed.

“DAY/NIGHT” BUTTON

To change the display brightness, push the “DAY/NIGHT” button. Pushing the button again will change the display to DAY or NIGHT display. Then, adjust the brightness moving the joystick right or left.

If no operation is done within 10 seconds, or if the “PREV” button is pushed, the display will return to the previous display.

VENTILATORS

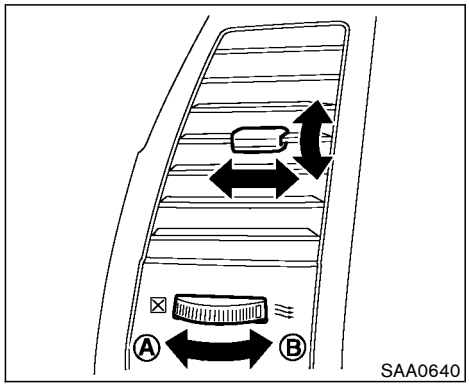

SAA0640

Open or close, and adjust the air flow direction of ventilators.

Ⓐ: This symbol indicates that the vents are closed when the vent switch is moved to the left.

Ⓑ: This symbol indicates that the vents are open when the vent switch is moved to the right.

HEATER AND AIR CONDITIONER
(Automatic)

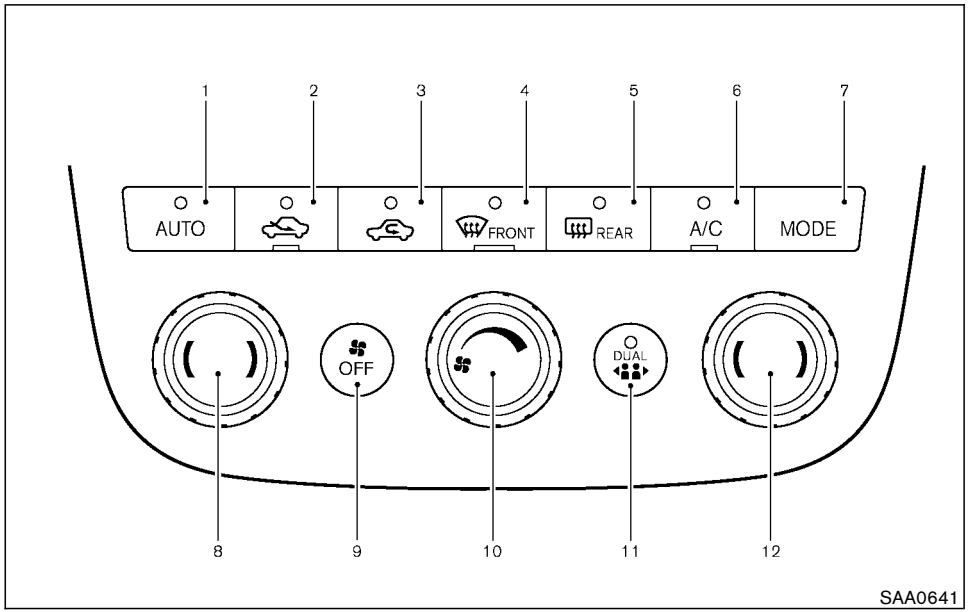

1. "**AUTO**" climate control ON button
2. " " fresh air button
3. " " air recirculation button
4. " " front defroster button
5. " " rear window defroster switch; refer to the "2. Instrument and controls" section.
6. "**A/C**" air conditioner ON/OFF button
7. "**MODE**" manual air flow control button
8. Temperature control knob (driver only, or driver and passenger)
9. "**OFF**" button for climate control system
10. Fan speed control knob
11. "**DUAL**" passenger side temperature control ON/OFF button
12. Temperature control knob (passenger side)

WARNING

- **The air conditioner cooling function operates only when the engine is running.**
- **Do not leave children or adults who would normally require the support of others alone in your vehicle. Pets should not be left alone either. On hot, sunny days, temperatures in a closed vehicle could quickly become high enough to cause severe or possibly fatal injuries to people or animals.**
- **Do not use the recirculation mode for long periods as it may cause the interior air to become stale and the windows to fog up.**
- **Positioning of the heating or air conditioning controls should not be done while driving, so full attention may be given to vehicle operation.**

Start the engine and operate the controls to activate the air conditioner.

AUTOMATIC OPERATION

Cooling and/or dehumidified heating (AUTO)

This mode may be normally used all year round as the system automatically works to keep a constant temperature. Air flow distribution and fan speed are also controlled automatically.

1. Push the AUTO button on. (AUTO will be displayed.)
2. Turn the temperature set dial to the left or right to set the desired temperature.

- Adjust the temperature set dial to about 75°F (24°C) for normal operation.
- The temperature of the passenger compartment will be maintained automatically. Air flow distribution and fan speed are also controlled automatically.

3. You can individually set driver and front passenger side temperature using each temperature control knob. When the DUAL button is pushed or passenger side temperature control knob is turned, the DUAL indicator will come on. To turn off the passenger side temperature control, push the DUAL button.

Heating (A/C OFF)

The air conditioner does not activate. When you need to heat only, use this mode.

1. Push the A/C button. (A/C OFF will be displayed and A/C indicator will turn off.)
2. Turn the temperature set dial to the left or right to set the desired temperature.

- The temperature of the passenger compartment will be maintained automatically. Air flow distribution and fan speed are also controlled automatically.
- Do not set the temperature lower than the outside air temperature. Otherwise the system may not work properly.
- Not recommended if windows fog up.

Dehumidified defrosting or defogging

1. Push the FRONT defroster button on. (The indicator light on the button will come on.)
2. Turn the temperature set dial to the left or right to set the desired temperature.

- To quickly remove ice from the outside of the windows, turn the fan speed control knob to right and set to the maximum position.
- As soon as possible after the windshield is

clean, push the AUTO button to return to the auto mode.

- When the front defroster button is pushed, the air conditioner will automatically be turned on at outside temperatures above 23°F (−5°C) to defog the windshield, and the air recirculate mode will automatically be turned off.

  Outside air is drawn into the passenger compartment to improve the defogging performance.

MANUAL OPERATION

Fan speed control

Turn the fan control button to manually control the fan speed.

Push the AUTO button to return to automatic control of the fan speed.

Air recirculation

Push the air recirculation button to recirculate interior air inside the vehicle. The indicator light on the button will come on.

The air recirculation cannot be activated when the air conditioner is in the front defrosting mode .

Fresh air

Push the button to draw outside air into the passenger compartment. The indicator light on the button will come on.

Automatic intake air control

In the AUTO mode, the intake air will be controlled automatically. To manually control the intake air, push the air recirculate or fresh air button. To return to the automatic control mode, push the indicator-illuminated button for about 2 seconds. The indicator lights (both air recirculate and fresh air buttons) will flash twice, and then the intake air will be controlled automatically.

Air flow control

Pushing the MODE manual air flow control button selects the air outlet to:

- : Air flows from center and side ventilators.
- : Air flows from center and side ventilators and foot outlets.
- : Air flows mainly from foot outlets.
- : Air flows from defroster and foot outlets.

To turn the system off

Push the OFF button.

OPERATING TIPS

When the engine coolant temperature and outside air temperature are low, the air flow from the foot outlets may not operate for a maximum of 150 seconds. However, this is not a malfunction. After the coolant temperature warms up, the air flow from the foot outlets will operate normally.

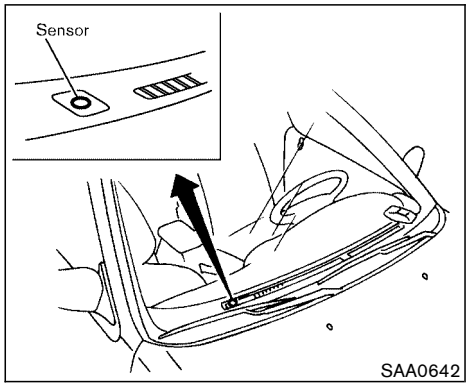

The sensor on the instrument panel helps maintain a constant temperature; do not put anything on or around this sensor.

IN-CABIN MICROFILTER

The air conditioning system is equipped with an in-cabin microfilter which collects dirt, pollen, dust, etc. To make sure the air conditioner heats, defogs, and ventilates efficiently, replace the filter according to the specified maintenance intervals listed in your Service and Maintenance Guide. To replace the filter, contact your NISSAN dealer.

The filter should be replaced if the air flow decreases significantly or if windows fog up easily when operating the heater or air conditioning system.

SERVICING AIR CONDITIONER

The air conditioning system in your NISSAN vehicle is charged with a refrigerant designed with the environment in mind. **This refrigerant will not harm the earth's ozone layer.** However, special charging equipment and lubricants are required when servicing your NISSAN air conditioner. Using improper refrigerants or lubricants will cause severe damage to your air conditioning system. See "Capacities and recommended fuel/lubricants" in the "9. Technical and consumer information" section for air conditioning system refrigerant and lubricant recommendations.

Your NISSAN dealer will be able to service your environmentally friendly air conditioning system.

WARNING

The air conditioner system contains refrigerant under high pressure. To avoid personal injury, any air conditioner service should be done only by an experienced technician with proper equipment.

AUDIO SYSTEM

Turn the ignition key to ACC or ON and press the power on switch to turn on the radio. If you listen to the radio with the engine not running, the key should be turned to the ACC position.

Radio reception is affected by station signal strength, distance from radio transmitter, buildings, bridges, mountains and other external influences. Intermittent changes in reception quality normally are caused by these external influences.

Using a cellular phone in or near the vehicle may influence radio reception quality.

Radio reception

Your radio system is equipped with state-of-the-art electronic circuits to enhance radio reception. These circuits are designed to extend reception range, and to enhance the quality of that reception.

However there are some general characteristics of FM, AM and satellite radio signals that can affect radio reception quality in a moving vehicle, even when the finest equipment is used. These characteristics are completely normal in a given reception area, and do not indicate any malfunction in your radio system.

Remember that a moving vehicle is not the ideal place to listen to a radio. Because of the movement, reception conditions will constantly change. Buildings, terrain, signal distance and interference from other vehicles can work against ideal reception. Described below are some of the factors that can affect your radio reception.

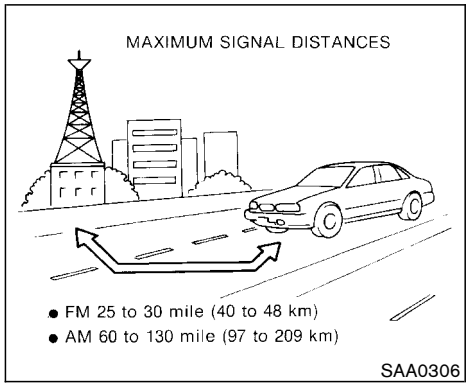

FM RADIO RECEPTION

Range: FM range is normally limited to 25 to 30 miles (40 to 48 km), with monaural (single channel) FM having slightly more range than stereo FM. External influences may sometimes interfere with FM station reception even if the FM station is within 25 miles (40 km). The strength of the FM signal is directly related to the distance between the transmitter and receiver. FM signals follow a line-of-sight path, exhibiting many of the same characteristics as light. For example they will reflect off objects.

Fade and drift: As your vehicle moves away from

a station transmitter, the signals will tend to fade and/or drift.

Static and flutter: During signal interference from buildings, large hills or due to antenna position, usually in conjunction with increased distance from the station transmitter, static or flutter can be heard. This can be reduced by adjusting the treble control counterclockwise to reduce treble response.

Multipath reception: Because of the reflective characteristics of FM signals, direct and reflected signals reach the receiver at the same time. The signals may cancel each other, resulting in momentary flutter or loss of sound.

AM RADIO RECEPTION

AM signals, because of their low frequency, can bend around objects and skip along the ground. In addition, the signals can be bounced off the ionosphere and bent back to earth. Because of these characteristics. AM signals are also subject to interference as they travel from transmitter to receiver.

Fading: Occurs while the vehicle is passing through freeway underpasses or in areas with many tall buildings. It can also occur for several seconds during ionospheric turbulence even in areas where no obstacles exist.

Static: Caused by thunderstorms, electrical power lines, electric signs and even traffic lights.

SATELLITE RADIO RECEPTION

When the satellite radio is first installed or the battery has been replaced, the satellite radio may not work properly. This is not a malfunction. Wait more than 10 minutes with satellite radio ON for satellite radio to receive all of the necessary data.

No satellite radio reception is available and “NO SAT” is displayed when the SAT button is pressed, unless optional satellite receiver and antenna were factory installed (late availability only/retrofit unavailable), and an XM® or SIRIUS™ satellite radio service subscription is active.

Satellite radio performance may be effected if cargo carried on the roof rack blocks the satellite radio signal.

If possible, do not put cargo over the satellite radio antenna.

AUDIO OPERATION PRECAUTIONS

Cassette player

- **To maintain good quality sound, NISSAN recommends using cassette tapes of 60 minutes or shorter in length.**
- **Cassette tapes should be removed from the player when not in use. Store cassettes in their protective cases and away from direct sunlight, heat, dust, moisture and magnetic sources.**
- **Direct sunlight can cause the cassette to become deformed. The use of deformed cassettes may cause the cassette to jam in the player.**
- **Do not use cassettes with labels which are peeling and loose. If used, the label could jam in the player.**
- **If a cassette has loose tape, insert a pencil through one of the cassette hubs and rewind the tape firmly around the hubs. Loose tape may cause tape jamming and wavering sound quality.**
- **Over a period of time, the playback head, capstan and pinch roller may collect a tape coating residue as the tape is played. This residue accumulation can cause weak or wavering sound, and should be removed periodically with a head cleaning tape. If the residue is not removed periodically, the player may need to be disassembled for cleaning.**

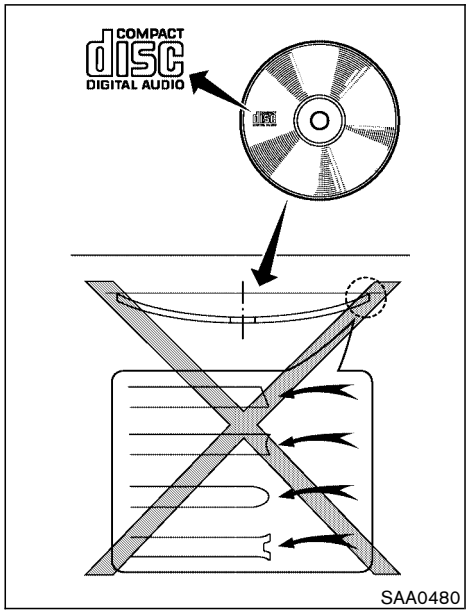

Compact Disc (CD) player

- **Only use high quality 4.7 inches (12 cm) round discs that have the "COMPACT disc DIGITAL AUDIO" logo on the disc or packaging.**
- **During cold weather or rainy days, the player may malfunction due to the humidity. If this occurs, remove the CD and dehumidify or ventilate the player completely.**
- **The player may skip while driving on rough roads.**
- **The CD player sometimes cannot function when the compartment temperature is extremely high. Decrease the temperature before use.**
- **Do not expose the CD to direct sunlight.**
- **CDs that are of poor quality, dirty, scratched, covered with fingerprints, or that have pin holes may not work properly.**
- **The following CDs may not work properly:**
  - **Copy control compact discs (CCCD)**
  - **Recordable compact discs (CD-R)**
  - **Rewritable compact discs (CD-RW)**
- **Do not use the following CDs as they may cause the CD player to malfunction.**
  - **3.1 in (8 cm) discs with an adapter**
  - **CDs that are not round**
  - **CDs with a paper label**
  - **CDs that are warped, scratched, or have abnormal edges**

FM-AM-SAT RADIO WITH
COMPACT DISC (CD) PLAYER (TYPE A)

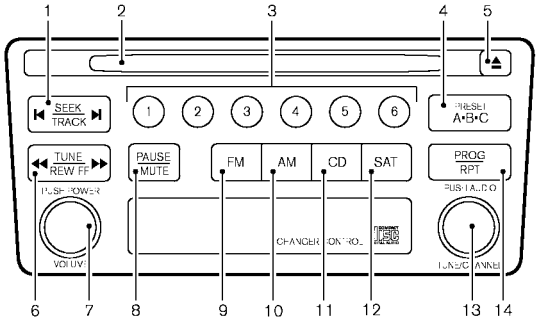

SAA0650

FM-AM-SAT RADIO WITH CASSETTE PLAYER
AND COMPACT DISC (CD) CHANGER (TYPE B)

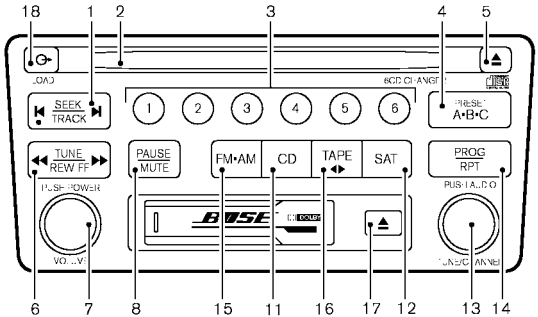

SAA0651

1. SEEK/APS REW, APS FF/TRACK CHANGE button
2. CD slot
3. Station and preset (FM/AM/SAT)/CD insert/eject or CD play (Type B only) select button
4. A.B.C. preset select button
5. CD EJECT button
6. RADIO TUNE/FF·REW button
7. ON·OFF/VOLUME control knob
8. “PAUSE/MUTE” button
9. “FM” band select button (Type A)
10. “AM” band select button (Type A)
11. CD play button
12. “SAT” satellite radio select button
13. Tuning up/down knob and AUDIO (BASS, TREBLE, FADE, and BALANCE, (SSV and NR (Dolby) — Type B only)) knob
14. PROG (program)/RPT (repeat) play button
15. FM-AM band select button (Type B)
16. TAPE play button
17. TAPE EJECT button

18. CD LOAD button (Type B only)

FM-AM-SAT RADIO WITH CASSETTE PLAYER AND COMPACT DISC (CD) PLAYER (TYPE A)/CD CHANGER (TYPE B)

No satellite radio reception is available and “NO SAT” is displayed when the SAT button is pressed, unless optional satellite receiver and antenna were factory installed (late availability only/retrofit unavailable), and an XM® or SIRIUS™ satellite radio service subscription is active.

Audio main operation

The tape deck employs a permalloy head which allows for improved reproduction of high frequency ranges. Noise is also greatly reduced by the combined use of the Dolby NR (Noise Reduction) system. The auto loudness circuit enhances the low frequency range automatically in both radio reception and tape and CD playback.

ON·OFF/Volume control:

Turn the ignition key to ACC or ON, and then push the ON·OFF/Volume control knob while the system is off to call up the mode (radio, tape or CD) which was playing immediately before the system was turned off. When no CD or tape is loaded, the radio will come on. While the system is on, pushing the ON·OFF/Volume control knob turns the system off.

To turn the radio off, press the Power/Volume control knob.

Turn the ON·OFF/Volume control knob to adjust the volume.

This vehicle has **Speed Sensitive control Volume (SSV) for audio (type B only)**. The audio volume changes as the driving speed changes.

AUDIO knob (BASS, TREBLE, FADE, BALANCE, (SSV and NR (Dolby) — type B only)):

Press the AUDIO knob to change the selecting mode as follows.

BASS → TREBLE → FADE → BALANCE → SSV (type B only) → NR (when cassette playing type B only)

To adjust BASS, Treble, Fader and Balance, press the AUDIO knob until the desired mode BASS, TREBLE, FADE or BALANCE appears in the display. Turn the Tuning knob to adjust Bass and Treble to the desired level. Use the Tuning knob also to adjust Fader or Balance modes. Fader adjusts the sound level between the front and rear speakers and Balance adjusts the sound between the right and left speakers.

To change the SSV mode to OFF, LOW, MID or HIGH, turn the Tuning knob to right or left. (type B only).

To change the NR (Dolby) mode to OFF or ON, turn the Tuning knob to right or left while cassette tape is playing. When Dolby is ON, the display indicates the DD mark.

Dolby noise reduction manufactured under license from Dolby Laboratories Licensing Corporation. Dolby NR and the double-D symbol “ DD ” are trademarks of Dolby Laboratories Licensing Corporation.

After 10 seconds, the radio, cassette tape or CD display reappears. Once the sound quality is set to the desired level, press the AUDIO button repeatedly until the radio, cassette tape or CD display appears.

Display CD text:

To indicate the CD mode text, push the AUDIO knob during CD playing.

Track title → Disc title → BASS → TREBLE → FADE → BALANCE → SSV → Display mode

To change the indicated text in display mode, turn the tuning knob within 2 seconds.

The text will change as follows:

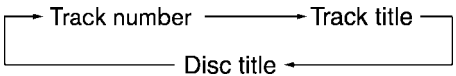

Display satellite radio text:

To indicate the satellite mode text, push the AUDIO knob during satellite radio play.

Artist → Title → BASS → TREBLE → FADE → BALANCE → SSV → Display mode

To change the indicated text in display mode, turn the tuning knob within 2 seconds.

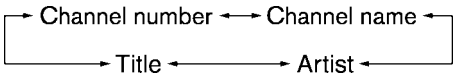

PAUSE MUTE **Pause/mute button:**

To mute or pause the audio sound, push the PAUSE/MUTE button.

To release the mute or pause, push the button again.

FM-AM-SAT radio operation

FM / AM **or** SAT **FM/AM/SAT radio select:**

Pushing the FM/AM (Type B), FM, AM (Type A) or SAT band select button will change the band as follows:

AM ↔ FM or SAT (Satellite)

When FM/AM/SAT radio select button is pushed while the ignition switch is in the ACC or ON, the radio will come on at the station last played.

The last station played will also come on when the power knob is turned to ON.

No satellite radio reception is available and “NO SAT” is displayed when the SAT button is pressed, unless optional satellite receiver and antenna were factory installed (late availability only/retrofit unavailable), and an XM® or SIRIUS™ satellite radio service subscription is active.

If a compact disc or tape is playing when the FM/AM/SAT radio select button is turned to ON, the compact disc or tape will automatically be turned off and the last radio station played will come on.

The FM stereo indicator ST will glow during FM stereo reception. When the stereo broadcast signal is weak, the radio will automatically change from stereo to monaural reception.

TUNE (Tuning):

WARNING

The radio should not be tuned while driving so full attention may be given to vehicle operation.

To tune the radio, push the RADIO TUNE button (▶▶ or ◀◀) or turn the Tuning knob to right or left.

Use these buttons for manual tuning. To move quickly through the channels, hold either of the RADIO TUNE buttons down for more than 1.5 seconds.

▶| |◀ **SEEK/SCAN tuning:**

Push the SEEK button ▶| or |◀ for less than 1.5 seconds, to tune from high to low or low to high frequencies and stops at the next broadcasting station.

Push the ▶| or |◀ SEEK button for more than 1.5 seconds to tune from low to high frequencies and stops at each broadcasting station for 5 seconds. Pushing the button again during this 5 seconds period will stop SCAN tuning and the radio will remain tuned to that station.

If the SEEK button is not pushed within 5 seconds, SCAN tuning moves to the next station.

Station memory operations:

Eighteen (18) stations can be set for the FM, AM and SAT band to the A, B and C preset button.

1. Choose preset channel A, B or C using the preset select button.
2. Tune to the desired station using the SEEK, SCAN or TUNE button and keep pushing any of the desired station memory buttons (1 to 6) until a beep sound is heard. (The radio mutes when the select button is pushed.)
3. The channel indicator will then come on and the sound will resume. Memorizing is now complete.
4. Other buttons can be set in the same manner.

If the battery cable is disconnected, or if the fuse blows, the radio memory will be cancelled. In that case, reset the desired stations.

Radio data system (RDS):

RDS stands for Radio Data System, and is a data information service transmitted by some radio stations on the FM band (not AM band) and/or SATELLITE band encoded within a regular radio broadcast. Currently, most RDS stations are in large cities, but many stations are now considering broadcasting RDS data.

RDS can display:

- Station call sign, such as “WHFR 98.3”.
- Station name, such as “The Groove”.
- Music or programming type such as “Classical”, “Country”, or “Rock”.
- Traffic reports about delays or construction.

If the station broadcasts RDS information, the RDS icon is displayed.

PROG/RPT Program type (PTY) (Category (CAT)):

When PROG/RPT button is pressed for more than 1.5 seconds during FM (SAT) mode, the PTY (CAT) name of the current tuned station is displayed. During this time if the PTY (CAT) data code is zero, or the data is unreadable; the display will show NONE.

1. PTY (CAT) selection mode

PTY (CAT) name selection can be done by the up/down TUNE button ▶▶ or ◀◀ in the PTY (CAT) selection mode.

It is possible to shift the PTY (CAT) name by one step, with one push of the up/down tuning button ▶▶ or ◀◀ .

PTY name selection can also be achieved by pressing the preset buttons.

Initial PTY names are stored in the preset buttons; but these can be changed by pressing the preset buttons for less than 1.5 seconds when the desired PTY name is in the display.

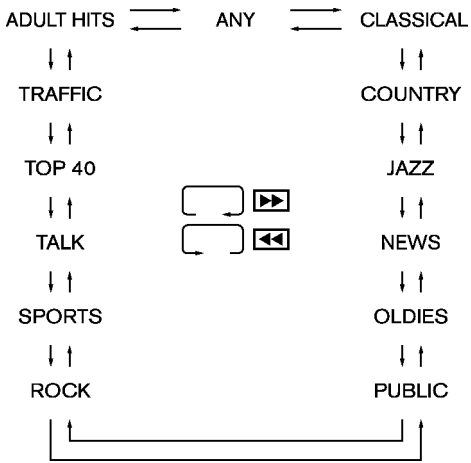

2. PTY SEEK tuning

After selecting a PTY name, push the SEEK button ▶| or |◀ for less than 0.5 seconds within 10 seconds. Tuning to the PTY

station will start. If you do not push the SEEK button within the 10 second period, the PTY mode will be canceled.

Push the SEEK button for more than 1.5 seconds to tune the PTY name station, and stop at each broadcasting station for 5 seconds. Pushing the button again during this 5 second period will stop SCAN tuning and the radio will remain tuned to that station. If the SEEK button is not pushed within 5 seconds, SCAN tuning moves to the next station.

Cassette tape player operation (Type B)

Turn the ignition key to ACC or ON, and then lightly insert the cassette tape into the tape door. The cassette tape will be automatically pulled into the player.

The radio or CD will turn off (if it is on) and the cassette tape will begin to play.

CAUTION

Do not force the cassette tape into the tape door. This could cause player damage.

If the system is turned off by pushing the ON·OFF/VOL control knob with the cassette tape still in the player, the tape will resume playing when the system is turned back on.

TAPE ◀▶ PLAY:

- When the TAPE button is pushed with the system turned off and a tape loaded, the system will come on and the tape will play.
- When the TAPE button is pushed with either the radio or compact disc turned on and the tape loaded, the compact disc or the radio will automatically be turned off and the tape will play.
- When the TAPE button is pushed with the TAPE playing, the tape will play the program recorded on the reverse side.

▶▶ ◀◀ FF (Fast Forward), REW (Rewind):

Push the ▶▶ (fast forward) button to fast forward the tape. To rewind the tape, push the ◀◀ (rewind) button. Either the FF or REW symbol illuminates on the display window. To stop the FF or REW function, press the ▶▶ (fast forward) or ◀◀ (rewind) again, or the TAPE button.

▶| |◀ APS (Automatic Program Search) FF, APS REW:

When the ▶| (APS FF) button is pushed for less than 1.5 seconds while the tape is being played, the next program will start to play from the beginning. Push the ▶| (APS FF) button several times to skip through programs. The tape will advance the number of times the button is pushed (up to nine programs).

When the |◀ (APS REW) button is pushed for less than 1.5 seconds once, the program being played starts over from the beginning. Push the |◀ (APS REW) button several times to skip back several selections. The tape will go back the number of times the button is pushed. Either the FF or REW symbol flashes on the display window while searching for the selection.

When pushing the ▶| (APS FF) or |◀ (APS REW) button for more than 1.5 seconds, each program will play for about 10 seconds. To stop playing, push the ▶| button again.

This system searches for the blank intervals between selections. If there is a blank interval within one program or there is no interval between programs, the system may not stop in the desired or expected location.

PROG/RPT REPEAT (RPT):

When the PROG/RPT play button is pushed while the tape is played, the tape program play is

repeated. To stop the repeat play, push the PROG/RPT play button again.

Metal or chrome tape usage:

The cassette player will be automatically set to high performance play when playing a metal or chrome cassette tape.

TAPE EJECT:

When this button is pushed with the tape loaded, the tape will be ejected.

When the tape is ejected while it is being played, the system will be turned off.

Compact disc (CD) player operation (Type A)

Turn the ignition key to the ACC or ON position and insert the compact disc into the slot with the label side facing up. The compact disc will be guided automatically into the slot and start playing.

After loading the disc, the number of tracks on the disc and the play time will appear on the display.

If the radio or tape is already operating, it will automatically turn off and the compact disc will play.

CAUTION

Do not force the compact disc into the slot. This could damage the player.

If the system has been turned off while the compact disc was playing, pushing the ON·OFF/VOL control knob will start the compact disc.

8 cm diameter compact discs can also be used without an adapter.

CD PLAY:

When the CD button is pushed with the system off and the compact disc loaded, the system will turn on and the compact disc will start to play.

When the CD button is pushed with the compact disc loaded but the tape or the radio playing, the tape or radio will automatically be turned off and the compact disc will start to play.

FF (Fast Forward), REW (Rewind):

When the ▶▶ (fast forward) or ◀◀ (rewind) button is pushed while the compact disc is being played, the compact disc will play while fast forwarding or rewinding. When the button is released, the compact disc will return to normal play speed.

APS (Automatic Program Search) FF, APS REW:

When the ▶| (APS FF) button is pushed for less than 1.5 seconds while the compact disc is being played, the program next to the present one will start to play from its beginning. Push several times to skip through programs. The compact disc will advance the number of times the button is pushed. (When the last program on the compact disc is skipped through, the first program will be played.) When the |◀ (APS REW) button is pushed for less than 1.5 seconds, the program being played returns to its beginning. Push several times to skip back through programs. The compact disc will go back the number of times the button is pushed.

When pushing the ▶| (APS FF) or |◀ (APS REW) button for more than 1.5 seconds, each track will play for about 10 seconds. To stop playing, push the ▶| button again.

REPEAT (RPT):

When the PROG/RPT play button is pushed while the compact disc is being played, the play pattern can be changed as follows:

→ 1 TRACK RPT → 1 DISC RDM → ALL DISC RPT →

CD EJECT:

When the CD EJECT button is pushed with the compact disc loaded, the compact disc will be ejected.

When this button is pushed while the compact disc is being played, the compact disc will come out and the system will turn off.

If the compact disc comes out and is not removed, it will be pulled back into the slot to protect it. (except 8 cm diameter compact discs)

CD IN indicator:

CD IN indicator appears on the display when the CD is loaded with the system on.

Compact disc (CD) changer operation (Type B)

Turn the ignition key to the ACC or ON position and insert the compact disc into the slot with the label side facing up. The compact disc will be guided automatically into the slot and start playing. To insert the disc, first push the LOAD button.

After loading the disc, the number of tracks on the disc and the play time will appear on the display.

If the radio or tape is already operating, it will automatically turn off and the compact disc will play.

CAUTION

Do not force the compact disc into the slot. This could damage the player.

If the system has been turned off while the compact disc was playing, pushing the ON·OFF/VOL control knob will start the compact disc.

LOAD button:

To insert a CD in the CD changer, push the LOAD button for less than 1.5 seconds. Select the loading slot by pushing the CD insert select button (1 to 6), then insert the CD.

To insert 6 CDs to the CD changer, push the LOAD button for more than 1.5 seconds.

The inserted slot numbers will illuminate on the display.

CD PLAY:

When the CD button is pushed with the system off and the compact disc loaded, the system will turn on and the compact disc will start to play.

When the CD button is pushed with the compact disc loaded with the tape or the radio playing, the tape or radio will automatically be turned off and the compact disc will start to play.

FF (Fast Forward), REW (Rewind):

When the ▶▶ (fast forward) or ◀◀ (rewind) button is pushed while the compact disc is being played, the compact disc will play while fast forwarding or rewinding. When the button is released, the compact disc will return to normal play speed.

APS (Automatic Program Search) FF, APS REW:

When the ▶| (APS FF) button is pushed for less than 1.5 seconds while the compact disc is being played, the program next to the present one will start to play from its beginning. Push several times to skip through programs. The compact disc will advance the number of times the button is pushed. (When the last program on the compact disc is skipped through, the first program will be played.) When the |◀ (APS REW) button is pushed for less than 1.5 seconds, the program being played returns to its beginning. Push several times to skip back through programs. The compact disc will go

back the number of times the button is pushed.

When pushing the ▶| (APS FF) or |◀ (APS REW) button for more than 1.5 seconds, each track will play for about 10 seconds. To stop playing, push the ▶| button again.

CD PLAY button:

To change CD, push the CD play select button (1 to 6). You can select if the CD is inserted.

PROG RPT **REPEAT (RPT):**

When the PROG/RPT play button is pushed while the compact disc is played, the play pattern can be changed as follows:

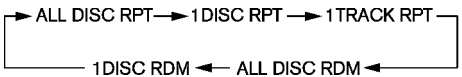

⏏ **CD EJECT:**

When the CD EJECT button is pushed with the compact disc loaded, the compact disc will be ejected.

To eject the selected discs by the EJECT button, push it for less than 1.5 seconds.

To eject all the discs, push the EJECT button for more than 1.5 seconds.

When this button is pushed while the compact disc is being played, the compact disc will come out and the system will turn off.

If the compact disc comes out and is not removed, it will be pulled back into the slot to protect it. (except 8 cm diameter compact discs)

CD IN indicator:

CD IN indicator appears on the display when the CD is loaded with the system on.

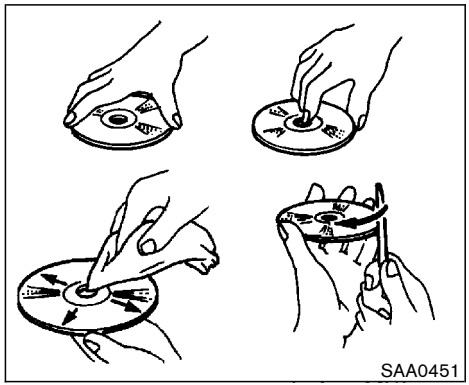

CD CARE AND CLEANING

- Handle a CD by its edges. Never touch the surface of the disc. Do not bend the disc.
- Always place the discs in the storage case when they are not being used.
- To clean a disc, wipe the surface from the center to the outer edge using a clean, soft cloth. Do not wipe the disc using a circular motion.
  Do not use a conventional record cleaner or alcohol intended for industrial use.
- A new disc may be rough on its inner and outer edges. Remove the rough edges using the side of a pen or pencil as illustrated.

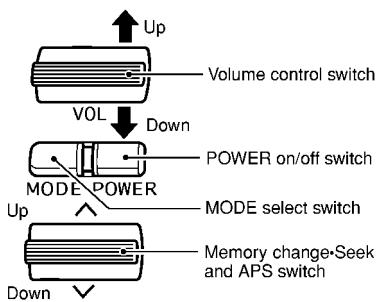

STEERING SWITCH FOR AUDIO CONTROL (if so equipped)

The audio system can be operated using the controls on the steering wheel.

POWER on/off switch

With the ignition key turned to the ACC or ON position, push the POWER switch to turn the audio system on or off.

MODE select switch

Push the mode select switch to change the mode in the sequence of FM, AM, SAT, CD and Tape.

Volume control switches

Push the volume control switch to increase or decrease the volume.

∨ ∧ Tuning

Memory change (radio):

Push the tuning switch ∨ or ∧ for less than 1.5 seconds to change the radio frequency.

Seek tuning (radio):

Push the tuning switch ∨ or ∧ for more than 1.5 seconds to seek the next or previous radio station.

APS (Automatic Program Search) FF, APS REW (tape and CD):

Push the tuning switch ∨ or ∧ for less 1.5 seconds to return to the beginning of the present program or skip to the next program. Push several times to skip back or skip through programs.

This system searches for the blank intervals between selections. If there is a blank interval within one program or there is no interval between programs, the system may not stop in the desired or expected location.

FF REW (tape or CD):

Push the tuning switch ∨ or ∧ for more than 1.5 seconds to rewind or fast forward the tape or to change the playing disc up or down.

To stop the FF or REW function, press the ∨ or ∧ button for less than 1.5 seconds again.

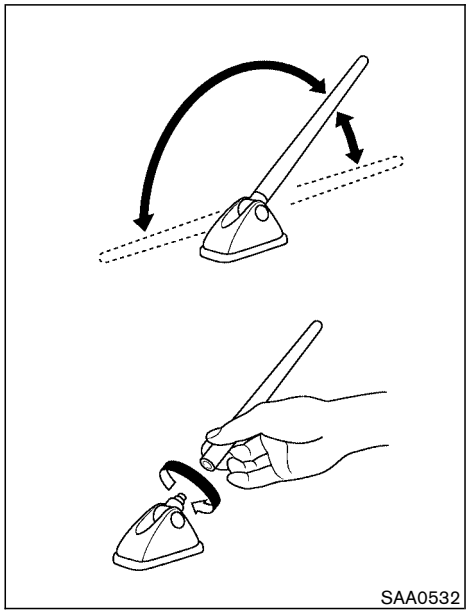

ANTENNA

Placing the antenna

You can adjust the antenna to three different positions manually.

Removing the antenna

You can remove the antenna if necessary.

Hold the bottom of the antenna and remove by turning counterclockwise.

CAUTION

- **Be sure that antenna is removed before the vehicle enters an automatic car wash.**
- **Be sure to fold down the antenna before the vehicle enters a garage with a low ceiling.**

CAR PHONE OR CB RADIO

When installing a CB, ham radio or car phone in your NISSAN, be sure to observe the following cautions, otherwise the new equipment may adversely affect the Engine control system and other electronic parts.

WARNING

- **A cellular telephone should not be used while driving so full attention may be given to vehicle operation. Some jurisdictions prohibit the use of cellular telephones while driving.**
- **If you must make a call while your vehicle is in motion, the hands free cellular phone operational mode (if so equipped) is highly recommended. Exercise extreme caution at all times so full attention may be given to vehicle operation.**
- **If a conversation in a moving vehicle requires you to take notes, pull off the road to a safe location and stop your vehicle before doing so.**

CAUTION

- **Keep the antenna as far as possible away from the Engine Control Module (ECM).**
- **Keep the antenna wire more than 8 in (20 cm) away from the Multiport Fuel Injection harness. Do not route the antenna wire next to any harness.**
- **Adjust the antenna standing-wave ratio as recommended by the manufacturer.**
- **Connect the ground wire from the CB radio chassis to the body.**
- **For details, consult a NISSAN dealer.**

5 Starting and driving

Precautions when starting and driving 5-2
Exhaust gas (Carbon monoxide) 5-2
Three way catalyst 5-3
Low tire pressure warning system (if so equipped) 5-3
Avoiding collision and rollover 5-4
On-pavement and offroad driving precautions (AWD) 5-5
Drinking alcohol/drugs and driving 5-5
Driving safety precautions 5-5
Ignition switch 5-8
Key positions 5-8
Nissan Vehicle Immobilizer System 5-9
Before starting the engine 5-9
Starting the engine 5-10
Driving the vehicle 5-10
CVT (Continuously Variable Transmission) 5-10
Parking brake 5-14
Cruise control (if so equipped) 5-14
Precautions on cruise control 5-14
Cruise control operations 5-15
Break-in schedule 5-16
Increasing fuel economy 5-17
Using all wheel drive (AWD) (if so equipped) 5-17
AWD lock switch operations 5-18
AWD warning light 5-19
Parking/parking on hills 5-20
Power steering 5-21
Brake system 5-21
Braking precautions 5-21
Anti-lock brake system (ABS) 5-22
Vehicle dynamic control (VDC) system (if so equipped) 5-23
Cold weather driving 5-24
Freeing a frozen door lock 5-24
Anti-freeze 5-24
Battery 5-24
Draining of coolant water 5-24
Tire equipment 5-25
Special winter equipment 5-25
Driving on snow or ice 5-25
Engine block heater (if so equipped) 5-26

PRECAUTIONS WHEN STARTING AND DRIVING

WARNING

- **Do not leave children or adults who would normally require the support of others alone in your vehicle. Pets should not be left alone either. They could accidentally injure themselves or others through inadvertent operation of the vehicle. Also, on hot, sunny days, temperatures in a closed vehicle could quickly become high enough to cause severe or possibly fatal injuries to people or animals.**
- **Properly secure all cargo to help prevent it from sliding or shifting. Do not place cargo higher than the seatbacks. In a sudden stop or collision, unsecured cargo could cause personal injury.**

EXHAUST GAS (Carbon monoxide)

WARNING

Do not breathe exhaust gases; they contain colorless and odorless carbon monoxide. Carbon monoxide is dangerous. It can cause unconsciousness or death.

- **If you suspect that exhaust fumes are entering the vehicle, drive with all windows fully open, and have the vehicle inspected immediately.**
- **Do not run the engine in closed spaces such as a garage.**
- **Do not park the vehicle with the engine running for any extended length of time.**
- **Keep the back door closed while driving, otherwise exhaust gases could be drawn into the passenger compartment. If you must drive with the back door open, follow these precautions:**
  1. **Open all the windows.**
  2. **Set the air recirculation switch OFF and the fan control at 4 (high) to circulate the air.**
- **If electrical wiring or other cable connections must pass to a trailer through the seal on the back door or the body, follow the manufacturer's recommendation to prevent carbon monoxide entry into the vehicle.**
- **If a special body or other equipment is added for recreational or other usage, follow the manufacturer's recommendation to prevent carbon monoxide entry into the vehicle. (Some recreational vehicle appliances such as stoves, refrigerator, heaters, etc. may also generate carbon monoxide.)**
- **The exhaust system and body should be inspected by a qualified mechanic whenever:**
  a. **The vehicle is raised for service.**
  b. **You suspect that exhaust fumes are entering into the passenger compartment.**
  c. **You notice a change in the sound of the exhaust system.**

d. You have had an accident involving damage to the exhaust system, underbody, or rear of the vehicle.

THREE WAY CATALYST

The three way catalyst is an emission control device installed in the exhaust system. Exhaust gases in the converter are burned at high temperatures to help reduce pollutants.

WARNING

- **The exhaust gas and the exhaust system are very hot. Keep people, animals or flammable materials away from the exhaust system components.**
- **Do not stop or park the vehicle over flammable materials such as dry grass, waste paper or rags. They may ignite and cause a fire.**

CAUTION

- **Do not use leaded gasoline. Deposits from leaded gasoline seriously reduce the three way catalyst's ability to help reduce exhaust pollutants.**
- **Keep your engine tuned up. Malfunctions in the ignition, fuel injection, or electrical systems can cause overrich fuel flow into the three way catalyst, causing it to overheat. Do not keep driving if the engine misfires, or if noticeable loss of performance or other unusual operating conditions are detected. Have the vehicle inspected promptly by a NISSAN dealer.**
- **Avoid driving with an extremely low fuel level. Running out of fuel could cause the engine to misfire, damaging the three way catalyst.**
- **Do not race the engine while warming it up.**
- **Do not push or tow your vehicle to start the engine.**

LOW TIRE PRESSURE WARNING SYSTEM (if so equipped)

This vehicle is equipped with the low tire pressure warning system, which displays pressure of all tires (except the spare tire) on the display screen by sending a signal from a sensor that is installed in each wheel.

The low tire pressure warning system will activate only when the vehicle is driven at speeds above 20 MPH (32 km/h). Also, this system may not detect a sudden drop in tire pressure (for example, a flat tire while driving).

Frequently check the tire pressure information display on the display screen and adjust pressure of each tire properly. (The order of the tire pressure figures displayed on the screen does not correspond with the actual order of the tire position.) See "Tire pressure information" in the "4. Display screen, heater, air conditioner and audio systems" section for tire pressure monitor.

LOW TIRE PRESSURE warning

If the vehicle is being driven with a low tire pressure (lower than 27 psi, 190 kPa), the low tire pressure warning light comes on, and the chime sounds for about 10 seconds.

WARNING

- **If the low tire pressure warning light comes ON while driving, avoid sudden steering maneuvers or abrupt braking, reduce vehicle speed, pull off the road to a safe location and stop the vehicle as soon as possible. Serious vehicle damage could occur and may lead to an accident and could result in serious personal injury. Check the pressure for all four tires and adjust the pressure to the COLD tire pressure shown on the tire placard. If you have a flat tire, replace it with a spare tire as soon as possible. (See "Flat tire" in the "6. In case of emergency" section for changing a flat tire.)**
- **When a spare tire is mounted or a wheel is replaced, the tire pressure of that tire will not be indicated and not be monitored by the low tire pressure warning system. Contact your NISSAN dealer as soon as possible for tire replacement and/or system resetting.**
- **Do not inject any tire liquid or aerosol tire sealant into the tires, as this may cause a malfunction of the tire pressure sensors.**

CAUTION

Do not place metalized film or any metal parts (antenna, etc.) on the windows. This may cause poor reception of the signals from the tire pressure sensors, and the low tire pressure warning system will not function properly.

FCC Notice:

Changes or modifications not expressly approved by the manufacturer compliance could void the user's authority to operate the equipment.

This device complies with Part 15 of the FCC Rules and RSS-210 of Industry Canada.

Operation is subject to the following two conditions: (1) This device may not cause harmful interference, and (2) this device must accept any interference received, including interference that may cause undesired operation of the device.

AVOIDING COLLISION AND ROLLOVER

WARNING

Failure to operate this vehicle in a safe and prudent manner may result in loss of control or an accident.

Be alert and drive defensively at all times. Obey all traffic regulations. Avoid excessive speed, high speed cornering, or sudden steering maneuvers, because these driving practices could cause you to lose control of your vehicle. **As with any vehicle, a loss of control could result in a collision with other vehicles or objects, or cause the vehicle to rollover, particularly if the loss of control causes the vehicle to slide sideways.** Be attentive at all times, and avoid driving when tired. Never drive when under the influence of alcohol or drugs (including prescription or over-the-counter drugs which may cause drowsiness). Always wear your seat belt. See "Seat belts" in the "1.

Seats, restraints and supplemental air bag systems" section. Also instruct your passengers to do so.

Seat belts help reduce the risk of injury in collisions and rollovers. **In a rollover crash, an unbelted person is significantly more likely to die than a person wearing a seat belt.**

ON-PAVEMENT AND OFFROAD DRIVING PRECAUTIONS (AWD)

Utility vehicles have a significantly higher rollover rate than other types of vehicles.

They have higher ground clearance than passenger cars to make them capable of performing in a variety of on-pavement and offroad applications. This gives them a higher center of gravity than ordinary cars. An advantage of higher ground clearance is a better view of the road, allowing you to anticipate problems. However, they are not designed for cornering at the same speeds as conventional two-wheel drive vehicles any more than low-slung sports cars are designed to perform satisfactorily under offroad conditions. If at all possible, avoid sharp turns or abrupt maneuvers, particularly at high speeds. As with other vehicles of this type, failure to operate this vehicle correctly may result in loss of control or vehicle rollover.

Be sure to read the driving safety precautions later in this section.

DRINKING ALCOHOL/DRUGS AND DRIVING

WARNING

Never drive under the influence of alcohol or drugs. Alcohol in the bloodstream reduces coordination, delays reaction time and impairs judgment. Driving after drinking alcohol increases the likelihood of being involved in an accident injuring yourself and others. Additionally, if you are injured in the accident, alcohol can increase the severity of the injury.

NISSAN is committed to safe driving. You must not drive under the influence of alcohol. Every year thousands of people are injured or killed in alcohol related accidents. Although the local laws vary on what is considered to be legally intoxicated, the fact is that alcohol affects all people differently and most people underestimate the effects of alcohol.

Remember, drinking and driving don't mix!

And that's true for drugs too (over the counter, prescription, and illegal drugs). Don't drive if your ability to operate your vehicle is impaired by alcohol, drugs, or some other physical condition.

DRIVING SAFETY PRECAUTIONS

Please observe the following precautions:

WARNING

- **Drive carefully when off the road and avoid dangerous areas. Every person who drives or rides in this vehicle should be seated with their seat belt fastened. This will keep you and your passengers in position when driving over rough terrain.**
- **Before driving up or down grades, check the road surface for bumps or potholes. Be sure to climb a gentle slope and descend a gentle slope.**
- **Do not drive across steep slopes. Instead drive either straight up or straight down the slopes. Off-road vehicles can tip over sideways much more easily than they can forward or**

backward.

- Many hills are too steep for any vehicle. If you drive up them, you may stall. If you drive down them, you may not be able to control your speed. If you drive across them, you may roll over.
- Do not shift selector lever while driving on downhill grades as this could cause loss of control of the vehicle.
- Be sure to use the engine brake. The foot brake performance may be reduced, resulting in a possible accident.
- Stay alert when driving to the top of a hill. At the top there could be a drop-off or other hazard that could cause an accident.
- If your engine stalls or you cannot make it to the top of a steep hill, never attempt to turn around. Your vehicle could tip or roll over. Always back straight down in R (Reverse) range. Never back down in N (Neutral), using only the brake, as this could cause loss of control.
- Heavy braking going down a hill could cause your brakes to overheat and fade, resulting in loss of control and an accident. Apply brakes lightly and use a low range to control your speed.
- Unsecured cargo can be thrown around when driving over rough terrain. Properly secure all cargo so it will not be thrown forward and cause injury to you or your passengers.
- To avoid raising the center of gravity excessively, do not exceed the rated capacity of the roof rack (if so equipped) and evenly distribute the load. Secure heavy loads in the cargo area as far forward and as low as possible. Do not equip the vehicle with tires larger than specified in this manual. This could cause your vehicle to roll over.
- Do not grip the inside or spokes of the steering wheel when driving off-road. The steering wheel could move suddenly and injure your hands. Instead drive with your fingers and thumbs on the outside of the rim.
- Before operating the vehicle, ensure that the driver and all passengers have their seat belts fastened.
- Always drive with the floor mats in place as the floor may become hot.
- Lower your speed when encountering strong crosswinds. With a higher center of gravity, your NISSAN is more affected by strong side winds. Slower speeds ensure better vehicle control.
- Do not drive beyond the performance of the tires, even with AWD engaged.

  Accelerating quickly, sharp steering maneuvers or sudden braking may cause loss of control.
- If at all possible, avoid sharp turning maneuvers, particularly at high

speeds. Your NISSAN all wheel drive vehicle has a higher center of gravity than a two wheel drive vehicle. The vehicle is not designed for cornering at the same speeds as conventional two wheel drive vehicles. Failure to operate this vehicle correctly could result in loss of control and/or a roll over accident.

- Always use tires of the same type, size, brand, construction (bias, bias-belted or radial), and tread pattern on all four wheels. Install tire chains on the front wheels when driving on slippery roads and drive carefully.
- Be sure to check the brakes immediately after driving in mud or water. See "Brake system" later in this section for wet brakes.
- Avoid parking your vehicle on steep hills. If you get out of the vehicle and it rolls forward, backward or sideways, you could be injured.
- Whenever you drive off-road through sand, mud or water as deep as the wheel hub, more frequent maintenance may be required. See "Periodic maintenance" in the "Service and Maintenance Guide".
- Do not drive continuously on sandy or muddy roads with the front wheels spinning. The AWD warning light blinks and the driving mode changes to 2WD. This could reduce traction force remarkably. Be especially careful when towing a trailer. (AWD models)
- Do not use 2-wheel chassis dynamometers or 2-wheel free rollers. (AWD models)
- Never operate the accelerator pedal with the front wheels raised and the rear wheels on the ground while jacking up or with the front wheels on the roller and the rear wheels on the ground. Otherwise, the vehicle could jump. (AWD models)
- When a wheel is suspended due to running off the road, do not idle the wheel excessively. (AWD models)
- When the vehicle is on a free roller or the front or rear wheels are jacked up, do not start the engine. (AWD models)

IGNITION SWITCH

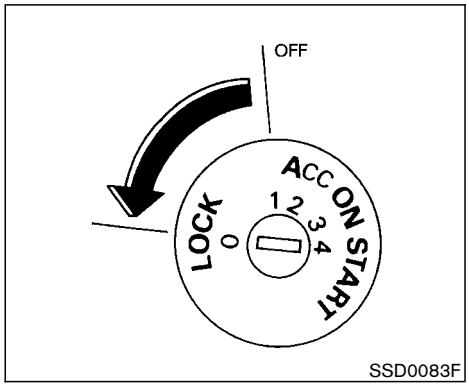

On CVT (Continuously Variable Transmission) models, the ignition lock is designed so that the key cannot be turned to LOCK and removed until the selector lever is moved to the P (Park) position.

When removing the key from the ignition, make sure the selector lever is in the P (Park) position.

If the selector lever is not returned to P (Park) position, the key cannot be moved toward LOCK.

When the key cannot be turned toward the LOCK position, proceed as follows to remove the key:

1. Move the selector lever into the P (Park) position.
2. Turn the ignition key slightly in the ON direction.
3. Turn the key toward the LOCK position.
4. Remove the key.

If the key is removed from the ignition switch, the selector lever cannot be moved from P (Park) position. **The selector lever can be moved if the ignition switch is in the ON position and the foot brake pedal is depressed.**

There is an OFF position in between LOCK and ACC, although it does not show on the lock cylinder. When the ignition is in OFF the steering wheel is not locked.

In order for the steering wheel to be locked, it must be turned about 1/6 of a turn clockwise from the straight up position.

To lock the steering wheel, turn the key to the LOCK position. Remove the key. To unlock the steering wheel, insert the key and turn it gently while rotating the steering wheel slightly right and left.

WARNING

Never remove or turn the key to the LOCK position while driving. The steering wheel will lock. This may cause the driver to lose control of the vehicle and could result in serious vehicle damage and/or personal injury.

KEY POSITIONS

The switch includes an anti-theft steering lock device.

LOCK (Normal parking position) (0)

The ignition key can only be removed when the switch is in this position.

OFF (1)

The engine can be turned off without locking the steering wheel.

ACC (Accessories) (2)

This position activates electrical accessories such as the radio when the engine is not running.

ON (Normal operating position) (3)

This position turns on the ignition system and the electrical accessories.

START (4)

This position activates the starter motor, starting the engine.

NISSAN VEHICLE IMMOBILIZER SYSTEM

The Nissan Vehicle Immobilizer System will not allow the engine to start without the use of the registered Nissan Vehicle Immobilizer System key.

If the engine fails to start using the registered Nissan Vehicle Immobilizer System key, it may be due to interference caused by another Nissan Vehicle Immobilizer System key, an automated toll road device or automated payment device on the key ring. Restart the engine using the following procedures:

1. Leave the ignition switch in the ON position for approximately 5 seconds.
2. Turn the ignition switch to the OFF or LOCK position and wait approximately 10 seconds.
3. Repeat step 1 and 2 again.
4. Restart the engine while holding the device (which may have caused the interference) separate from the registered Nissan Vehicle Immobilizer System key.

If this procedure allows the engine to start, NISSAN recommends placing the registered Nissan Vehicle Immobilizer System key on a separate key ring to avoid interference from other devices.

BEFORE STARTING THE ENGINE

- Make sure the area around the vehicle is clear.
- Maintenance items should be checked periodically, for example, each time you check engine oil.
- Check that all windows and lights are clean.
- Visually inspect tires for their appearance and condition. Also, check tires for proper inflation.
- Lock all doors.
- Position seat and adjust head restraints.
- Adjust inside and outside mirrors.
- Adjust the pedal position.
- Fasten seat belts and ask all passengers to do likewise.
- Check the operation of warning lights when key is turned to the ON (3) position.

STARTING THE ENGINE

1. Apply the parking brake.
2. Move the selector lever to P (Park) or N (Neutral). (P preferred.)

   The starter is designed not to operate if the selector lever is in one of the driving positions.
3. Crank the engine **with your foot off the accelerator pedal** by turning the ignition key to START. Release the key when the engine starts. If the engine starts, but fails to run, repeat the above procedure.

- When the engine is very hard to start in extremely cold weather or when restarting, depress the accelerator pedal a little (approximately 1/5 to the floor) and hold it then crank the engine. Release the key and the accelerator pedal when the engine starts.
- When the engine is very hard to start because it is flooded, depress the accelerator pedal all the way to the floor and hold it. Crank the engine for 5 to 6 seconds. After cranking the engine, release the accelerator pedal. Crank the engine **with your foot off the accelerator pedal** by turning the ignition key to START. Release the key when the engine starts. If the engine starts, but fails to run, repeat the above procedure.

CAUTION

Do not operate the starter for more than 15 seconds at a time. If the engine does not start, turn the key off and wait 10 seconds before cranking again, otherwise the starter could be damaged.

4. **Warm-up**

   Allow the engine to idle for at least 30 seconds after starting. Drive at moderate speed for a short distance first, especially in cold weather.

DRIVING THE VEHICLE

CVT (Continuously Variable Transmission)

Gate type shift

The CVT in your vehicle is electronically controlled by a transmission control module to produce maximum power and smooth operation.

Shown on the following pages are the recommended operating procedures for this transmission. Follow these procedures for maximum vehicle performance and driving enjoyment.

Starting the vehicle

After starting the engine, fully depress the foot brake pedal before shifting the selector lever to the R (Reverse), N (Neutral), D (Drive), S (Second) or L (Low) position. Be sure the vehicle is fully stopped before attempting to shift the selector lever.

This CVT model is designed so that the foot brake pedal must be depressed before shifting from P (Park) to any drive position while the ignition switch is ON.

The selector lever cannot be moved out of P (Park) position and into any of the other shift range if the ignition key is turned to the LOCK, OFF or ACC position or if the key is removed from the switch.

1. Keep the foot brake pedal depressed and shift into a driving range.
2. Release the parking brake and foot brake, then gradually start the vehicle in motion.

WARNING

- **Do not depress the accelerator pedal while shifting from P or N to R, or D. Always depress the brake pedal until shifting is completed. Failure to do so could cause you to lose control and have an accident.**
- **Cold engine idle speed is high, so use caution when shifting into a forward or reverse range before the engine has warmed up.**
- **On slippery roads, do not downshift. This may cause a loss of control.**
- **Never shift to P or R while vehicle is moving. This could cause an accident.**

CAUTION

When stopping the vehicle on an uphill grade, do not hold the vehicle by depressing the accelerator pedal. The foot brakes should be used for this purpose.

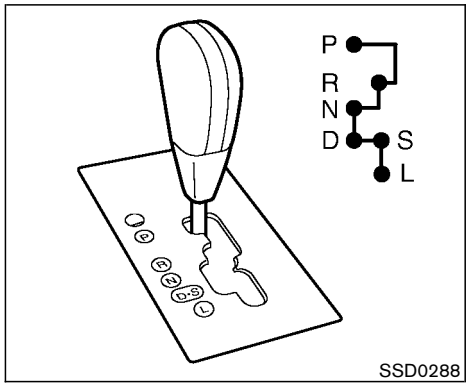

Shifting

After starting the engine, fully depress the brake pedal and shift the selector lever from P (Park) to R (Reverse), D (Drive), or any of the desired shift positions.

WARNING

Apply the parking brake if the selector lever is in any position while the engine is not running. Failure to do so could cause the vehicle to move unexpectedly

or roll away and result in serious personal injury and/or property damage.

If the key is turned to OFF or ACC for any reason while the vehicle is in R (Reverse), N (Neutral), or any D (Drive) position, the key cannot be turned to LOCK and be removed from the ignition switch. Additionally, the selector lever cannot be moved to R (Reverse) from N (Neutral) or any D (Drive) position. The selector lever can be moved to R (Reverse) from any of the D (Drive) positions within 3 minutes after the ignition switch is turned to the ACC or OFF position. The selector lever can be moved from R (Reverse) to P (Park) with the key in the OFF or ACC position.
If the key cannot be turned to LOCK, perform the following steps:

1. Apply the parking brake when the vehicle is stopped.
2. Turn the key to ON while depressing the foot brake pedal.
3. Move the selector lever to P (Park).
4. Turn the ignition key to LOCK to remove the key.

P (Park):

Use this selector position when the vehicle is parked or when starting the engine. Make sure the vehicle is completely stopped. **The brake pedal must be depressed to move the selector lever from N (Neutral) or any drive position to P (Park).** Apply the parking brake. When parking on a hill, apply the parking brake first, then move the lever to the P (Park) position.

CAUTION

Use this position only when the vehicle is completely stopped.

R (Reverse):

Use this position to back up. Always be sure the vehicle is completely stopped when selecting R (Reverse). **The brake pedal must be depressed to move the selector lever from P (Park) to R (Reverse).**

The selector lever can be moved to R (Reverse) from any of the D (Drive) positions within 3 minutes after the ignition switch is turned to the ACC or OFF position.

N (Neutral):

Neither forward or reverse is engaged. The engine can be started in this position. You may shift to N (Neutral) and restart a stalled engine while the vehicle is moving.

D (Drive):

Use this position for all normal forward driving.

S (Second):

Use this position for the improved engine braking.

L (Low):

Use this position for maximum engine braking on steep downhill gradients/climbing steep slopes and whenever approaching sharp bends. Do not use the L position in any other circumstances.

Shift from the D to S or L position after releasing the accelerator pedal.

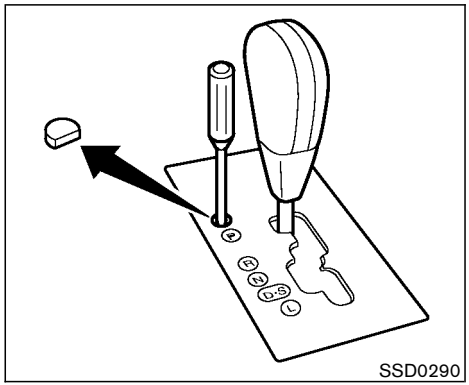

SSD0290

Shift lock release

If the battery charge is low or discharged, the selector lever may not be moved from the P (Park) position even with the brake pedal depressed.

To move the selector lever, depress the brake pedal, remove the cover using a suitable tool and push the shift lock release button. The selector lever can be moved to N (Neutral). This allows the vehicle to be moved if the battery is discharged.

If the selector lever cannot be moved out of P (Park), have your NISSAN dealer check the CVT system as soon as possible.

Accelerator downshift — In D position —

For rapid passing or hill climbing, fully depress the accelerator pedal to the floor. This shifts the transmission down into lower range, depending on the vehicle speed.

High fluid temperature protection mode

This transmission has a high fluid temperature protection mode. If the fluid temperature becomes too high (for example, when climbing steep grades in high temperature with heavy loads, such as when towing a trailer), engine power and, under some conditions, vehicle speed will be decreased automatically to reduce the chance of transmission damage. Vehicle speed can be controlled with the accelerator pedal, but the vehicle may not accelerate above approximately 40 to 50 MPH (65 to 80 km/h).

Fail-safe

If the vehicle is driven under extreme conditions, such as excessive wheel spinning and subsequent hard braking, the fail-safe system may be activated. The MIL may come on to indicate the fail-safe mode is activated, see "Malfunction indicator lamp (MIL)" in the "2. Instrument and controls" section. This will occur even if all electrical circuits are functioning properly. In this case, turn the ignition key OFF and wait for 3 seconds. Then turn the key back to the ON position. The vehicle should return to its normal operating condition. If it does not return to its normal operating condition, have your NISSAN dealer check the transmission and repair if necessary.

WARNING

When the high fluid temperature protection mode or fail-safe operation occurs, vehicle speed may be gradually reduced. On highways, the reduced speed may be lower than other traffic which could increase the chance of a collision. Be especially careful when driving. If necessary, pull to the side of the road at a safe place and allow the transmission to return to normal operation, or have it repaired if necessary.

PARKING BRAKE

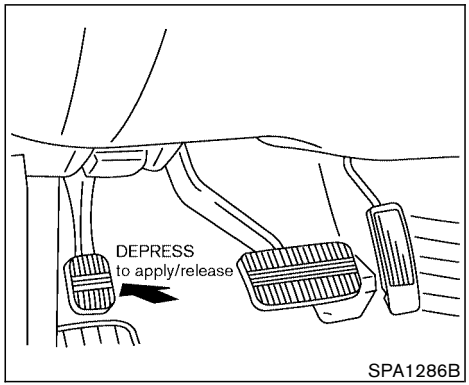

To apply: Fully depress the parking brake pedal.

To release:

1. Firmly apply the foot brake.
2. Depress the parking brake pedal and the parking brake will be released.
3. Before driving, be sure the brake warning light goes out.

WARNING

- **Be sure the parking brake is fully released before driving. Failure to do so can cause brake failure and lead to an accident.**
- **Do not release the parking brake from outside the vehicle.**
- **Do not use the gear shift in place of the parking brake. When parking, be sure the parking brake is fully engaged.**
- **Do not leave children unattended in a vehicle. They could release the parking brake and cause an accident.**

CRUISE CONTROL (if so equipped)

WARNING

Do not use the cruise control when driving under the following conditions:

- **it is not possible to keep the vehicle at a set speed.**
- **in heavy traffic or in traffic that varies in speed.**
- **on winding or hilly roads.**
- **on slippery roads (rain, snow, ice, etc.).**
- **in very windy areas.**

Doing so could cause a loss of vehicle control and result in an accident.

PRECAUTIONS ON CRUISE CONTROL

- If the cruise control system malfunctions, it cancels automatically. The SET indicator light on the meter panel then blinks to warn the driver.
- If the SET indicator light blinks, turn the cruise control main switch off and have the system checked by your NISSAN dealer.

- The SET indicator light may blink when the cruise control main switch is turned on while pushing the ACCEL/RES, COAST/SET, or CANCEL switch (located on the steering wheel). To properly set the cruise control system, perform the preceding steps in the order indicated.

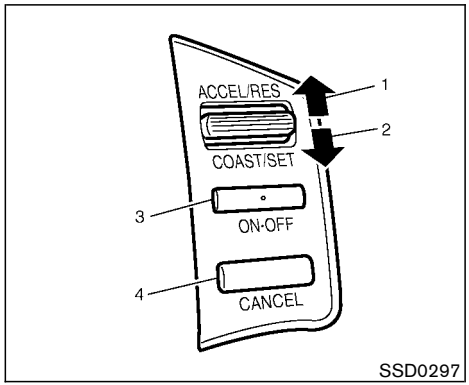

1. ACCEL or RESUME switch
2. COAST or SET switch
3. ON/OFF switch
4. CANCEL switch

CRUISE CONTROL OPERATIONS

The cruise control allows driving at a speed between 25 to 89 MPH (40 to 144 km/h) without keeping your foot on the accelerator pedal.

To turn on the cruise control, push the main switch on. The CRUISE indicator light on the meter panel will come on.

To set at cruising speed, accelerate your vehicle to the desired speed, push the COAST/SET switch and release it. (The SET indicator light will come on.) Take your foot off the accelerator pedal. Your vehicle will maintain the set speed.

- **To pass another vehicle,** depress the accelerator pedal. When you release the pedal, the vehicle will return to the previously set speed.
- The vehicle may not maintain the set speed when going up or down steep hills. If this happens, drive without the cruise control.

To cancel the preset speed, follow either of these three methods:

a) Push the cancel switch; The SET indicator light will go out.

b) Tap the brake pedal; The SET indicator light will go out.

c) Turn the main switch off. Both the CRUISE indicator and SET indicator lights will go out.

- If you depress the brake pedal while pushing the ACCEL/RES set switch and reset at the cruising speed, turn the main switch off once and then turn it on again.
- The cruise control will automatically be cancelled if the vehicle slows down below ap-

proximately 8 MPH (13 km/h).

- Move the selector lever to N (Neutral) position. The SET indicator light will go out.

To reset at a faster cruising speed, use one of the following three methods:

a) Depress the accelerator pedal. When the vehicle attains the desired speed, push and release the COAST/SET switch.

b) Push and hold the ACCEL/RES set switch. When the vehicle attains the speed you desire, release the switch.

c) Push, then quickly release the ACCEL/RES set switch. Each time you do this, the set speed will increase by about 1 MPH (1.6 km/h).

To reset at a slower cruising speed, use one of the following three methods:

a) Lightly tap the brake pedal. When the vehicle attains the desired speed, push the COAST/SET switch and release it.

b) Push and hold the COAST/SET switch. Release the switch when the vehicle slows down to the desired speed.

c) Push, then quickly release the COAST/SET switch. Each time you do this, the set speed will decrease by about 1 MPH (1.6 km/h).

To resume the preset speed, push and release the RES/ACCEL set switch. The vehicle will resume the last set cruising speed when the vehicle speed is over 25 MPH (40 km/h).

BREAK-IN SCHEDULE

During the first 1,200 miles (2,000 km), follow these recommendations to obtain maximum engine performance and ensure the future reliability and economy of your new vehicle. Failure to follow these recommendations may result in shortened engine life and reduced engine performance.

- Avoid driving for long periods at constant speed, either fast or slow. Do not run the engine over 4,000 rpm.
- Do not accelerate at full throttle in any gear.
- Avoid quick starts.
- Avoid hard braking as much as possible.
- Do not tow a trailer for the first 500 miles (800 km).

INCREASING FUEL ECONOMY

- Accelerate slowly and smoothly. Maintain cruising speeds with a constant accelerator position.
- Drive at moderate speeds on the highway. Driving at high speed will lower fuel economy.
- Avoid unnecessary stopping and braking. Maintain a safe distance behind other vehicles.
- Use a proper gear range which suits road conditions. On level roads, shift into high gear as soon as possible.
- Avoid unnecessary engine idling.
- Keep your engine tuned up.
- Follow the recommended periodic maintenance schedule.
- Keep the tires inflated at the correct pressure. Low pressure will increase tire wear and waste fuel.
- Keep the front wheels in correct alignment. Improper alignment will cause not only tire wear but also lower fuel economy.
- Air conditioner operation lowers fuel economy. Use the air conditioner only when necessary.
- When cruising at highway speeds, it is more economical to use the air conditioner and leave the windows closed to reduce drag.

USING ALL WHEEL DRIVE (AWD) (if so equipped)

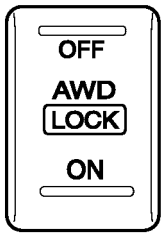

SSD0292

AWD LOCK SWITCH OPERATIONS

The AWD system is used to select AUTO, LOCK depending on the driving conditions.

AWD system electronically controls the coupling.

Push the AWD LOCK switch to move between each mode AUTO and LOCK, depending on driving conditions.

AWD LOCK switch	Wheel driven	AWD LOCK indicator light	Use conditions
AUTO (OFF)	Distribution of torque to the front and rear wheels changes automatically, depending on road conditions encountered [100:0]↔[50:50]. This results in improved driving stability.	Goes off.	For driving on paved or slippery roads
LOCK (ON)	*1 ALL wheel drive	AWD LOCK	For driving on rough roads

*1 LOCK mode will change to AUTO mode automatically, when the vehicle is accelerated or the vehicle speed is over approximately 19 MPH (30 km/h). The AWD LOCK indicator light does not go off.

- If the AWD LOCK switch is operated while accelerating or decelerating, or if the key switch is turned off while in the AUTO or LOCK position, you may feel a jerk. This is normal.
- The oil temperature of power train parts will increase if the vehicle is continuously operated under conditions where the difference in rotation between the front and rear wheels is large (wheel slip) such as when driving the vehicle on rough roads through sand, mud or freeing a stuck vehicle. In these cases, the AWD warning light blinks rapidly and the AWD mode changes to 2WD to protect the power train parts. If you stop driving with the engine idling and wait until the warning light stops blinking, the AWD returns to the AUTO mode.

WARNING

- **Do not start engine while in the AUTO or LOCK mode in the following cases:**
  When on free roller or jacking up the front tire with the rear tires on the ground.
- **When driving straight, shift the AWD lock switch to AUTO or LOCK. Do not operate the AWD lock switch when making a turn or reversing.**
- **Do not operate the AWD lock switch (AUTO and LOCK) with the front wheel spinning.**
- **Engine idling speed is high while warming up the engine. Be especially careful when starting or driving on slippery surfaces with the AWD lock switch set in OFF (AUTO).**
- **When turning the vehicle in LOCK mode on paved roads, you may feel a braking effect. This is a normal condition of the AWD model.**

Warning light	Comes on or blinks when
AWD Comes on	There is a malfunction in the all wheel drive system.
AWD Blinks rapidly	The power-train oil temperature rises abnormally.
AWD Blinks slowly	The difference in wheel rotation is large.

SSD0314A

AWD WARNING LIGHT

The AWD warning light is located in the meter.

The AWD warning light comes on when the key switch is turned to ON. It turns off soon after the engine is started.

If any malfunction occurs in the AWD system when the key switch is ON, the warning light will remain illuminated.

High-temperature power-train oil due to continuous operation of the vehicle to free a stuck vehicle makes the warning light blink rapidly (about twice per second). The driving mode may change to 2 wheel drive. AUTO mode may change to LOCK mode before the warning light blinks. This is normal. If the warning light blinks rapidly during operation, stop the vehicle with the engine idling in a safe place immediately. Then if the light goes off after a while, you can continue driving.

A large difference between the diameters of front and rear wheels will make the warning light blink slowly (about once per two seconds). Pull off the road in a safe area, and idle the engine. Check that all tire sizes are the same, tire pressure is correct and tires are not worn.

CAUTION

- **Do not operate the engine on the free roller with the front wheels raised.**
- **If the warning light comes on while driving, AUTO mode will be changed to 2 wheel drive mode. Reduce the vehicle speed and have your vehicle checked by a NISSAN dealer as soon as possible.**
- **When the warning light comes on, the 2 wheel drive may be engaged even if the driving mode is in AUTO or LOCK. Be especially careful when driving.**
- **Never drive on dry hard surface roads in the LOCK mode, as this will overload the power-train and may cause a serious malfunction.**
- **If the warning light is still on after the above operation, have your vehicle checked by a NISSAN dealer as soon as possible.**
- **The power-train may be damaged if you continue driving with the warning light blinking rapidly.**

PARKING/PARKING ON HILLS

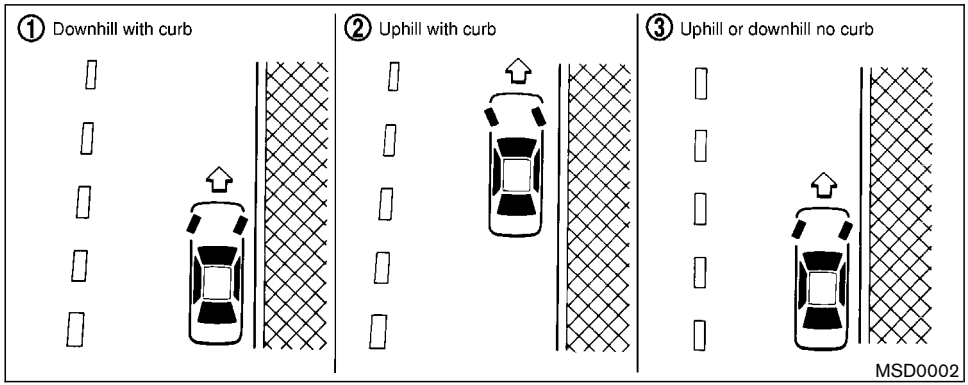

WARNING

- **Do not stop or park the vehicle over flammable materials such as dry grass, waste paper or rags. They may ignite and cause a fire.**
- **Never leave the engine running while the vehicle is unattended.**
- **Never leave children unattended in the vehicle.**

1. Firmly apply the parking brake.
2. Move the selector lever to the P (Park) position.

WARNING

- **Safe parking procedures require that both the parking brake be set and the transmission placed into P (Park). Failure to do so could cause the vehicle to move unexpectedly or roll away and result in an accident.**
- **Make sure the selector lever has been pushed as far forward as it can go and cannot be moved without depressing the button at the end of the lever.**

3. To help prevent the vehicle from rolling into the street when parked on a sloping drive way, it is a good practice to turn the wheels as illustrated.

- HEADED DOWNHILL WITH CURB: ①

  Turn the wheels into the curb and move the vehicle forward until the curb side wheel gently touches the curb.

- HEADED UPHILL WITH CURB: ②

  Turn the wheels away from the curb and move the vehicle back until the curb side wheel gently touches the curb.

- HEADED UPHILL OR DOWNHILL, NO CURB: ③

  Turn the wheels toward the side of the road so the vehicle will move away from the center of the road if it moves.

4. Turn the ignition key to the LOCK position and remove the key.

POWER STEERING

The power assisted steering is designed to use a hydraulic pump, driven by the engine, to assist steering.

If the engine stops or drive belt breaks, you will still have control of the vehicle. However, much greater steering effort is needed, especially in sharp turns or at low speeds.

WARNING

If the engine is not running or is turned off while driving, the power assist for the steering will not work. Steering will be much harder to operate.

BRAKE SYSTEM

BRAKING PRECAUTIONS

The brake system has two separate hydraulic circuits. If one circuit malfunctions, you will still have braking at two wheels.

Vacuum assisted brake

The brake booster aids braking by using engine vacuum. If the engine stops, you can stop the vehicle by depressing the brake pedal. However, greater foot pressure on the brake pedal will be required to stop the vehicle and the stopping distance will be longer.

Wet brakes

When the vehicle is washed or driven through water, the brakes may get wet. As a result, your braking distance will be longer and the vehicle may pull to one side during braking.

To dry brakes, drive the vehicle at a safe speed while lightly pressing the brake pedal to heat-up the brakes. Do this until the brakes return to normal. Avoid driving the vehicle at high speeds until the brakes function correctly.

Using the brakes

Avoid resting your foot on the brake pedal while driving. This overheats the brakes, increases wear on the brake linings and pads, and reduces gas mileage.

To help save the brakes and to prevent the brakes from overheating, reduce speed and downshift to a lower gear before going down a slope or long grade. Overheated brakes may reduce braking performance and could result in loss of vehicle control.

WARNING

- **While driving on a slippery surface, be careful when braking, accelerating or downshifting. Abrupt braking or accelerating could cause the wheels to skid and result in an accident.**
- **If the engine is not running or is turned off while driving, the power assist for the brakes will not work. Braking will be harder.**

ANTI-LOCK BRAKE SYSTEM (ABS)

The anti-lock brake system controls the brakes at each wheel so the wheels will not lock when braking abruptly or when braking on slippery surfaces. The system detects the rotation speed at each wheel and varies the brake fluid pressure to prevent each wheel from locking and sliding. By preventing wheel lockup, the system helps the driver maintain steering control and helps to minimize swerving and spinning on slippery surfaces.

Using the system

Depress the brake pedal and hold it down.

WARNING

Do not pump the brake pedal. Doing so may result in increased stopping distances.

Normal operation

The anti-lock brake system will not operate at speeds below 3 to 6 MPH (5 to 10 km/h) to completely stop the vehicle. (The speeds will vary according to road conditions.) When the anti-lock system senses that one or more wheels are close to locking up, the actuator (under the hood) rapidly applies and releases hydraulic pressure (like pumping the brakes very quickly). While the actuator is working, you may feel a pulsation in the brake pedal and hear a noise or vibration from the actuator under the hood. This is normal and indicates that the anti-lock system is working properly. However, the pulsation may indicate that road conditions are hazardous and extra care is required while driving.

Self-test feature

The anti-lock brake system consists of electronic sensors, electric pumps, and hydraulic solenoids controlled by a computer. The computer has a built-in diagnostic feature that tests the system each time you start the engine and move the vehicle at a low speed in forward or reverse. When the self-test occurs, you may hear a clunk noise and/or feel a pulsation in the brake pedal. This is normal and is not an indication of any malfunction. If the computer senses any malfunction, it switches the anti-lock brake system OFF and turns on the ABS warning light in the meter. The brake system will then behave normally, but without anti-lock assistance.

If the light comes on during the self check, or while you are driving, you should take your vehicle to your NISSAN dealer for repair at your earliest convenience.

WARNING

The anti-lock brake system is a sophisticated device, but it cannot prevent ac-

cidents resulting from careless or dangerous driving techniques. It can help maintain vehicle control during braking on slippery surfaces, but remember that the stopping distance on slippery surfaces will be longer than on normal surfaces, even with the anti-lock system. Stopping distances may also be longer on rough, gravel or snow covered roads, or if you are using tire chains. Always maintain a safe distance from the vehicle in front of you. Ultimately, the responsibility for safety of self and others rests in the hands of the driver.

Tire type and condition of tires may also affect braking effectiveness.

- **When replacing tires, install the specified size of tires on all four wheels.**
- **When installing a spare tire, make sure it is the proper size and type as specified on the tire placard. See "Vehicle identification" in the "9. Technical and consumer information" section for tire placard location.**

VEHICLE DYNAMIC CONTROL (VDC) SYSTEM (if so equipped)

When driving on slippery surfaces or suddenly avoiding obstacles on roads, the vehicle might swerve or slip. With the vehicle dynamic control (VDC) system, sensors detect these movements and control the braking and engine output to help improve vehicle stability while driving. The system also varies the brake fluid pressure to prevent each wheel from locking.

- When the VDC system is operating, the slip indicator in the instrument panel blinks.
- When only the traction control system portion of the VDC system is operating, the slip indicator will also blink.
- If the slip indicator blinks, the vehicle is under slippery conditions. Be sure to drive carefully. See "Slip indicator light", and "VDC off indicator light" in the "2. Instruments and controls" section.
- Indicator light
  If a malfunction occurs in the system, the SLIP and VDC OFF indicator lights come on in the meter panel.
  As long as these warning lights are on, the traction control function is canceled.

The VDC uses a brake Limited Slip Differential (LSD) system to improve vehicle traction. The brake LSD system works when one of the driving wheels in spinning on a slippery surface. The brake LSD system brakes the spinning wheel which distributed the driving power to the other drive wheel. If the vehicle is operated with the vehicle dynamic control system turned off, all VDC and traction control functions will be turned off. The brake LSD and ABS system will still operate with the VDC system off. If the brake LSD system or the ABS system is activated, the slip indicator light will blink and you may hear a clunk noise and/or feel a pulsation in the brake pedal. This is also normal and indicates the brake fluid pressure is controlled properly.

While the VDC system is operating, you may feel a pulsation in the brake pedal and hear a noise or vibration from under the hood. This is normal and indicates that the VDC system is working properly.

The computer has a built in diagnostic feature that tests the system each time you start the engine and move the vehicle forward or in reverse at a slow speed. When the self-test occurs, you may hear a clunk noise and/or feel a pulsation in the brake pedal. This is normal and is not an indication of a malfunction.

WARNING

- **The vehicle dynamic control system**

is designed to help improve driving stability but does not prevent accidents due to abrupt steering operation at high speeds or by careless or dangerous driving techniques. Reduce vehicle speed and be especially careful when driving and cornering on slippery surfaces and always drive carefully.

- **If engine related parts such as muffler are not standard equipment or are extremely deteriorated, the vehicle dynamic control off indicator light and slip indicator light may come on.**
- **If suspension parts such as shock absorbers, struts, springs and bushings are not standard equipment or are extremely deteriorated, the vehicle dynamics control off indicator light may come on.**
- **When driving on extremely inclined surfaces such as higher banked corners, the vehicle dynamic control system may not operate properly or the vehicle dynamic control off indicator light may come on. Do not drive on these types of roads.**
- **If the tires other than the recommended ones are used, the vehicle dynamic control system may not operate properly or the vehicle dynamic control off indicator light may come on.**
- **The vehicle dynamic control system is not a substitute for winter tires or tire chains on a snow covered road.**
- **When the vehicle is on a conveyance such as a ferry, the vehicle dynamic control off indicator light and slip indicator light may come on. This is not a malfunction. Restart the engine after departing the conveyance.**

COLD WEATHER DRIVING

FREEING A FROZEN DOOR LOCK

To prevent a door lock from freezing, apply de-icer or glycerin to it through the key hole. If the lock becomes frozen, heat the key before inserting it into the key hole.

ANTI-FREEZE

In the winter when it is anticipated that the temperature will drop below 32°F (0°C), check anti-freeze to assure proper winter protection. For additional information, see “Engine cooling system” in the “8. Maintenance and do-it-yourself” section.

BATTERY

If the battery is not fully charged during extremely cold weather conditions, the battery fluid may freeze and damage the battery. To maintain maximum efficiency, the battery should be checked regularly. For additional information, see “Battery” in the “8. Maintenance and do-it-yourself” section.

DRAINING OF COOLANT WATER

If the vehicle is to be left outside without anti-freeze, drain the cooling system by opening the drain plug located under the radiator. Refill before operating the vehicle. See “Engine cooling system” in the “8. Maintenance and do-it-yourself” section for changing engine coolant.

TIRE EQUIPMENT

1. SUMMER tires are of a tread design to provide superior performance on dry pavement. However, the performance of these tires will be substantially reduced in snowy and icy conditions. If you operate your vehicle on snowy or icy roads, NISSAN recommends the use of MUD & SNOW or ALL SEASON tires on all four wheels. Please consult your NISSAN dealer for the tire type, size, speed rating and availability information.
2. For additional traction on icy roads, studded tires may be used. However, some provinces and states prohibit their use. Check local, state and provincial laws before installing studded tires.

Skid and traction capabilities of studded snow tires, on wet or dry surfaces, may be poorer than that of non-studded snow tires.

3. Tire chains may be used if desired. Make sure they are of proper size for the tires on your vehicle and are installed according to the chain manufacturer's suggestions. Use of tire chains may be prohibited according to location. Check the local laws before installing tire chains. When installing tire chains, make sure they are of proper size for the tires on your vehicle and are installed according to the chain manufacturer's suggestions. **Use only SAE Class S chains.** Class "S" chains are used on vehicles with restricted tire to vehicle clearance. Vehicles that can use Class "S" chains are designed to meet the SAE standard minimum clearances between the tire and the closest vehicle suspension or body component required to accommodate the use of a winter traction device (tire chains or cables). The minimum clearances are determined using the factory equipped tire size. Other types may damage your vehicle. Use chain tensioners when recommended by the tire chain manufacturer to ensure a tight fit. Loose end links of the tire chain must be secured or removed to prevent the possibility of whipping action damage to the fenders or underbody. If possible, avoid fully loading your vehicle when using tire chains. In addition, drive at a reduced speed. Otherwise, your vehicle may be damaged and/or vehicle handling and performance may be adversely affected.

- **Never install tire chains on TEMPORARY USE ONLY spare tires.**
- **Do not use tire chains on dry roads.**

Tire chains must be installed only on the front wheels and not on the rear wheels.

Do not drive with tire chains on paved roads which are clear of snow. Driving with chains in such conditions can cause damage to the various mechanisms of the vehicle due to some overstress.

4. For all wheel drive:
   If you install snow tires, they must also be the same size, brand, construction and tread pattern on all four wheels.

SPECIAL WINTER EQUIPMENT

It is recommended that the following items be carried in the vehicle during winter:

- a scraper and stiff-bristled brush to remove ice and snow from the windows and wiper blades.
- a sturdy, flat board to be placed under the jack to give it firm support.
- a shovel to dig the vehicle out of snow-drifts.
- extra window washer fluid to refill the reservoir tank.

DRIVING ON SNOW OR ICE

WARNING

- **Wet ice (32°F, 0°C and freezing rain),**

very cold snow or ice can be slick and very hard to drive on. The vehicle will have a lot less traction or grip under these conditions. Try to avoid driving on wet ice until the road is salted or sanded.

- **Whatever the condition, drive with caution. Accelerate and slow down with care. If accelerating or down-shifting too fast, the drive wheels will lose even more traction.**
- **Allow more stopping distance under these conditions. Braking should be started sooner than on dry pavement.**
- **Allow greater following distances on slippery roads.**
- **Watch for slippery spots (glare ice). These may appear on an otherwise clear road in shaded areas. If a patch of ice is seen ahead, brake before reaching it. Try not to brake while actually on the ice, and avoid any sudden steering maneuvers.**
- **Do not use cruise control on slippery roads.**
- **Snow can trap dangerous exhaust gases under your vehicle. Keep snow clear of the exhaust pipe and from around your vehicle.**

ENGINE BLOCK HEATER (if so equipped)

An engine block heater to assist extreme cold temperature starting is available through your NISSAN dealer.

WARNING

Do not use your heater with an ungrounded electrical system or two-pronged (cheater) adapters. You can be injured by an electrical shock if you use an ungrounded connection.

6 In case of emergency

Flat tire 6-2
Low tire pressure warning system (if so equipped) 6-2
Changing a flat tire 6-2
Jump starting 6-8
Push starting 6-10
If your vehicle overheats 6-10
Towing your vehicle 6-11
Towing recommended by NISSAN 6-12
Vehicle recovery (Freeing a stuck vehicle) 6-14

FLAT TIRE

LOW TIRE PRESSURE WARNING SYSTEM (if so equipped)

This vehicle is equipped with the low tire pressure warning system, which displays the pressure of each tire independently (except the spare tire) on the display screen by sending a signal from a sensor that is installed in each wheel. If the vehicle is being driven with low tire pressure (lower than 27 psi, 190 kPa), the low tire pressure warning system will activate and warn you of it by the low tire pressure warning light. This system will activate only when the vehicle is driven at speeds above 20 MPH (32 km/h). For more details, please refer to "Warning/indicator lights and audible reminders" in the "2. Instruments and controls" section, "Tire pressure information" in the "4. Display screen, heater, air conditioner and audio systems" section and "Low tire pressure warning system" in the "5. Starting and driving" section.

WARNING

- **If the low tire pressure warning light blinks while driving, avoid sudden steering maneuvers or abrupt braking, reduce vehicle speed, pull off the road to a safe location and stop the vehicle as soon as possible. Serious vehicle damage could occur and may lead to an accident and could result in serious personal injury. Check the pressure for all four tires and adjust the pressure to the COLD tire pressure shown on the tire placard. If you have a flat tire, replace it with a spare tire as soon as possible.**
- **When a spare tire is mounted or a wheel is replaced, the pressure of that tire will not be indicated or monitored by the low tire pressure warning system. Contact your NISSAN dealer as soon as possible for tire replacement and/or system resetting.**
- **Do not inject any tire liquid or aerosol tire sealant into the tires, as this may cause a malfunction of the tire pressure sensors.**

CHANGING A FLAT TIRE

If you have a flat tire, follow the instructions below.

Stopping the vehicle

1. Safely move the vehicle off the road away from traffic.
2. Turn on the hazard warning flashers.
3. Park on a level surface and apply the parking brake. Shift the selector lever in P (Park) position.
4. Turn off the engine.
5. Raise the hood to warn other traffic, and to signal professional road assistance personnel that you need assistance.
6. Have all passengers get out of the vehicle and stand in a safe place, away from traffic and clear of the vehicle.

WARNING

- **Make sure that the parking brake is securely applied and the selector lever is shifted into P (Park).**
- **Never change tires when the vehicle is on a slope, ice or slippery areas. This is hazardous.**
- **Never change tires if oncoming traffic**

is close to your vehicle. Wait for professional road assistance.

- **When a spare tire is mounted or a wheel is replaced, the pressure of that tire will not be indicated and not be monitored by the low tire pressure warning system. Contact your NISSAN dealer as soon as possible for tire replacement and/or system resetting. (For models with the low tire pressure warning system)**

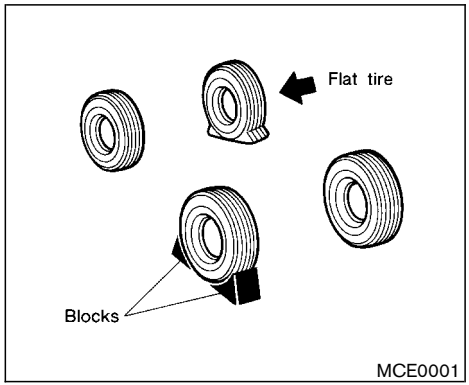

Blocking wheels

Place suitable blocks at both the front and back of the wheel diagonally opposite the flat tire to prevent the vehicle from rolling when it is jacked up.

WARNING

Be sure to block the wheel as the vehicle may move and could cause personal injury.

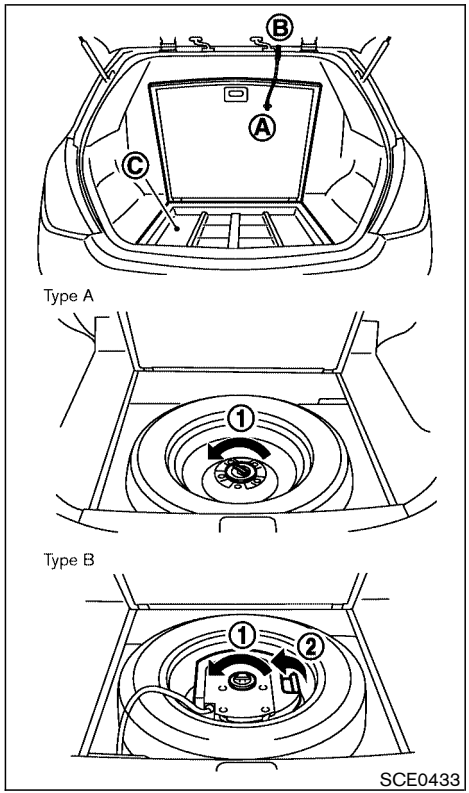

Getting the spare tire and tools

Pull up the floor cover and hang the strap (A) to upper body (B) as illustrated. Remove the under tray (C) (if so equipped).

Type A:

Turn the retainer counterclockwise (1) and remove the spare tire.

Type B:

Turn the retainer counterclockwise (1), remove the subwoofer (2) and remove the spare tire.

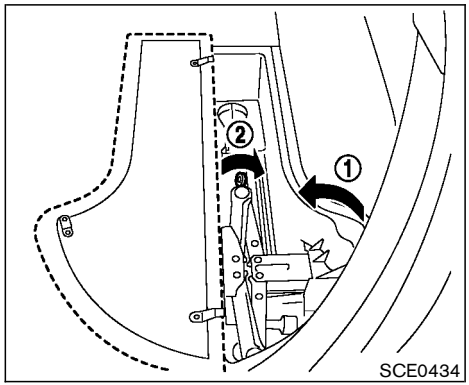

Pull up the floor cover (1) as illustrated and remove (2) the jack and tools.

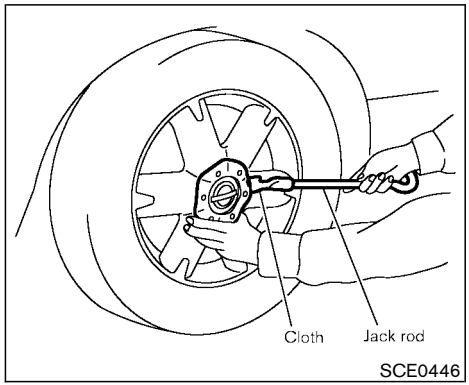

Removing wheel cap

CAUTION

Do not use your hands to pry off wheel caps. Doing so could result in personal injury.

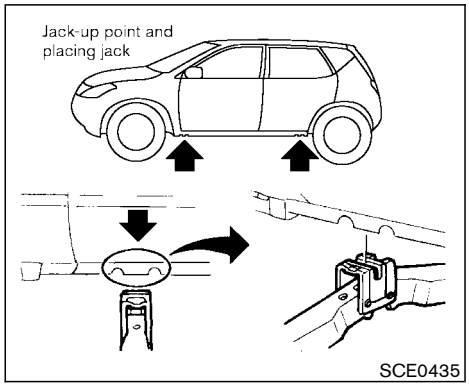

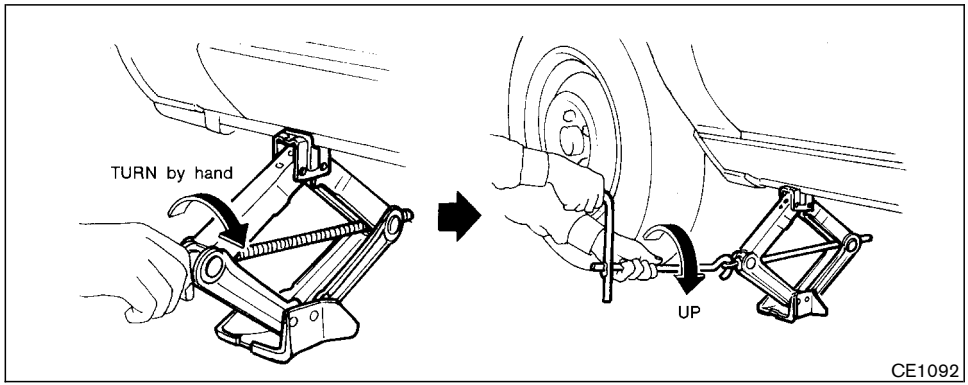

Jacking up vehicle and removing the damaged tire

Carefully read the caution label attached to the jack body and the following instructions.

1. Place the jack directly under the jack-up point as illustrated above so that top of the jack contacts the vehicle at the jack up point. Align the jack head between the two notches in the front or the rear as shown. Also fit the groove of the jack head between the notches as shown.

The jack should be used on level firm ground.

2. Loosen each wheel nut one or two turns by turning counterclockwise with the wheel nut wrench. **Do not remove the wheel nuts until the tire is off the ground.**
3. Carefully raise the vehicle until the tire clears the ground. To lift the vehicle, securely hold the jack lever and rod with both hands as shown above. Remove the wheel nuts, and then remove the tire.

WARNING

- **Never get under the vehicle while it is supported only by the jack.**
- **Use only the jack provided with your vehicle to lift the vehicle. Do not use the jack provided with your vehicle on other vehicles.**
  The jack is designed only for lifting your vehicle during a tire change.

- **Use the correct jack up points; never use any other part of the vehicle for jack support.**
- **Never jack up the vehicle more than necessary.**
- **Never use blocks on or under the jack.**
- **Do not start or run engine while vehicle is on the jack, as it may cause the vehicle to move. This is especially true for vehicles with limited slip differential carriers.**
- **Do not allow passengers to stay in the vehicle while it is on the jack.**

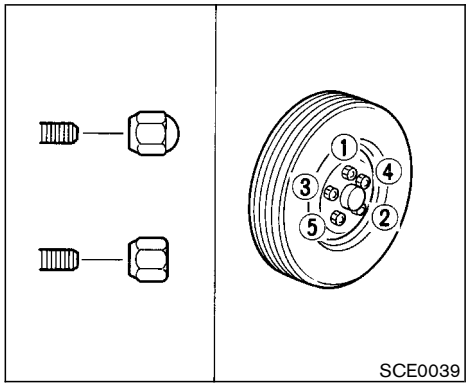

Installing the spare tire

1. Clean any mud or dirt from the surface between the wheel and hub.
2. Carefully put the wheel on and tighten the wheel nuts finger tight.
3. With the wheel nut wrench, tighten wheel nuts alternately and evenly until they are tight.
4. Lower the vehicle slowly until the tire touches the ground. Then, with the wheel nut wrench, tighten the wheel nuts securely in the sequence as illustrated.

WARNING

- **Incorrect wheel nuts or improperly tightened wheel nuts can cause the wheel to become loose or come off. This could cause an accident.**
- **Do not use oil or grease on the wheel studs or nuts. This could cause the nuts to become loose.**

As soon as possible tighten the wheel nuts to the specified torque with a torque wrench.

Wheel nut tightening torque:

80 ft-lb (108 N·m)

Adjust tire pressure to the COLD pressure.

COLD pressure:

After vehicle has been parked for three hours or more or driven less than 1 mile (1.6 km).

COLD tire pressures are shown on the tire placard affixed to the center pillar.

For models equipped with the low tire pressure warning system:

After adjusting tire pressure to the COLD tire pressure, the display of the tire pressure information may show higher pressure than the COLD tire pressure after the vehicle has been driven more than 1 mile (1.6 km). This is because the tire pressurizes as the tire temperature rises. This does not indicate a system malfunction.

WARNING

Retighten the wheel nuts when the vehicle has been driven for 600 miles (1,000 km) (also in cases of a flat tire, etc.).

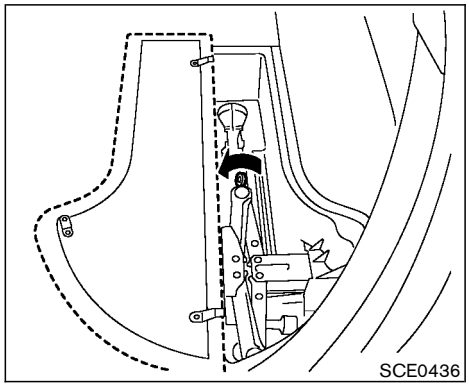

Stowing the damaged tire and tools

Securely store the spare tire and jacking equipment in the vehicle.

WARNING

- **Always make sure that the spare tire and jacking equipment are properly secured after use. Such items can become dangerous projectiles in an accident or sudden stop.**
- **The T-type spare tire and small size spare tire are designed for emergency use. See "Wheels and tires" in the "8. Maintenance and do-it-yourself" section.**

JUMP STARTING

To start your engine with a booster battery, the instructions and precautions below must be followed.

WARNING

- **If done incorrectly, jump starting can lead to a battery explosion, resulting in severe injury or death. It could also damage your vehicle.**
- **Explosive hydrogen gas is always present in the vicinity of the battery. Keep all sparks and flames away from the battery.**
- **Do not allow battery fluid to come into contact with eyes, skin, cloth or painted surfaces. Battery fluid is a corrosive sulphuric acid solution which can cause severe burns. If the fluid should come into contact with anything, immediately flush the contacted area with water.**
- **Keep battery out of the reach of children.**
- **The booster battery must be rated at 12 volts. Use of an improperly rated battery can damage your vehicle.**
- **Whenever working on or near a battery, always wear suitable eye protectors (for example, goggles or industrial safety spectacles) and remove rings, metal bands, or any other jewelry. Do not lean over the battery when jump starting.**
- **Do not attempt to jump start a frozen battery. It could explode and cause serious injury.**
- **Your vehicle has an automatic engine cooling fan. It could come on at any time. Keep hands and other objects away from it.**

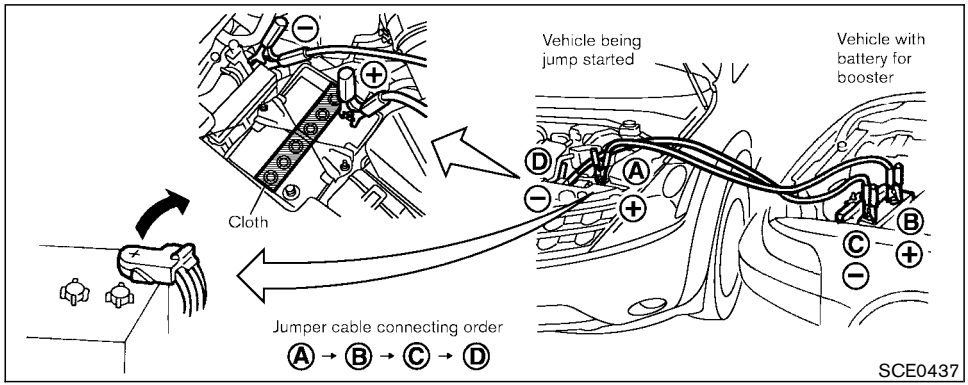

WARNING

Always follow the instructions below. Failure to do so could result in damage to the charging system and cause personal injury.

1. If the booster battery is in another vehicle, position the two vehicles to bring their batteries into close proximity to each other.

   Do not allow the two vehicles to touch.

2. Apply parking brake. Move the selector lever to the P (Park) position. Switch off all unnecessary electrical systems (light, heater, air conditioner, etc.).
3. Remove vent caps on the battery (if so equipped). Cover the battery with an old cloth as illustrated to reduce explosion hazard.
4. Connect jumper cables in the sequence as illustrated (Ⓐ → Ⓑ → Ⓒ → Ⓓ).

CAUTION

- **Always connect positive (+) to positive (+) and negative (–) to body ground (for example, strut mounting bolt, etc. — not to the battery).**
- **Make sure that cables do not touch moving parts in the engine compartment and that clamps do not contact any other metal.**

5. Start the engine of the other vehicle and let it run for a few minutes.
6. Keep the engine speed of the other vehicle at about 2,000 rpm, and start your engine in the normal manner.

CAUTION

Do not keep starter motor engaged for more than 10 seconds. If the engine does not start right away, turn the key off and wait 3 to 4 seconds before trying again.

7. After starting your engine, carefully disconnect the negative cable and then the positive cable.
8. Replace the vent caps (if so equipped). Be sure to dispose of the cloth used to cover the vent holes as it may be contaminated with corrosive acid.

PUSH STARTING

Do not start the engine by pushing.

CAUTION

- **CVT models cannot be push started. This may cause transmission damage.**
- **Three way catalyst equipped models should not be started by pushing since the three way catalyst may be damaged.**
- **Never try to start the vehicle by towing it; when the engine starts, the forward surge could cause the vehicle to collide with the tow vehicle.**

IF YOUR VEHICLE OVERHEATS

WARNING

- **Do not continue to drive if your vehicle overheats. Doing so could cause a vehicle fire.**
- **To avoid the danger of being scalded, never remove the radiator cap while the engine is still hot. When the radiator cap is removed, pressurized hot water will spurt out, possibly causing serious injury.**
- **Do not open the hood if steam is coming out.**

If your vehicle is overheating (indicated by an extremely high temperature gauge reading), or if you feel a lack of engine power, detect abnormal noise, etc., take the following steps:

1. Move the vehicle safely off the road, apply the parking brake and move the selector lever to the P (Park) position.

   Do not stop the engine.

2. Turn off the air conditioner switch. Open all the windows, move the heater or air conditioner temperature control to maximum hot

and fan control to high speed.

3. Get out of the vehicle. Look and listen for steam or coolant escaping from the radiator before opening the hood. Wait until no steam or coolant can be seen before proceeding.
4. Open the engine hood.

WARNING

If steam or water is coming from the engine, stand clear to prevent getting burned.

5. Visually check if the cooling fan is running. The radiator hoses and radiator should not leak water.

   If coolant is leaking or the cooling fan does not run, stop the engine.

WARNING

- **Be careful not to allow your hands, hair, jewelry or clothing to come into contact with, or to get caught in the cooling fan, or drive belt.**
- **The engine cooling fan can start at any time when the coolant temperature is high.**

6. After the engine cools down, check the coolant level in the reservoir tank with the engine running. Add coolant to the reservoir tank if necessary. Have your vehicle repaired at the nearest NISSAN dealer.

TOWING YOUR VEHICLE

When towing your vehicle, all State, provincial and local regulations for towing must be followed. Incorrect towing equipment could damage your vehicle. Towing instructions are available from a NISSAN dealer. Local service operators are generally familiar with the applicable laws and procedures for towing. To assure proper towing and to prevent accidental damage to your vehicle, NISSAN recommends having a service operator tow your vehicle. It is advisable to have the service operator carefully read the following precautions.

WARNING

- **Never ride in a vehicle that is being towed.**
- **Never get under your vehicle after it has been lifted by a tow truck.**

CAUTION

- **When towing, make sure that the transmission, axles, steering system and powertrain are in working condition. If any unit is damaged, dollies**

must be used.

- **Always attach safety chains before towing.**

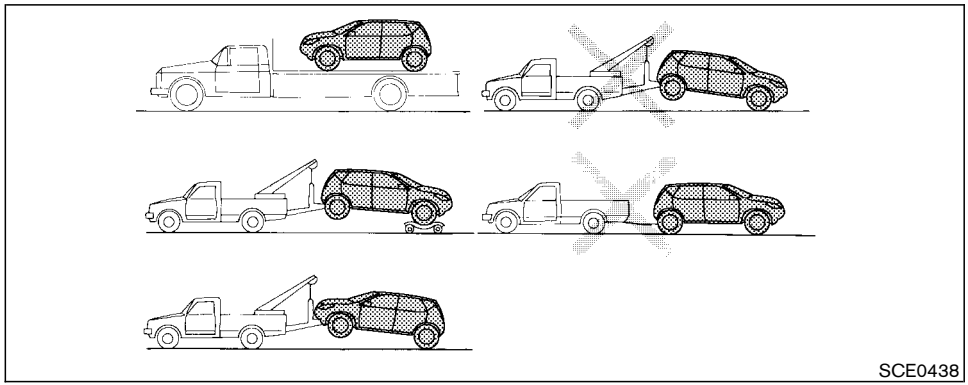

Two wheel drive models

TOWING RECOMMENDED BY NISSAN

Two wheel drive models

NISSAN recommends that your vehicle be towed with the driving (front) wheels off the ground or place the vehicle on a flat bed truck as illustrated.

CAUTION

- **Never tow CVT models with the front wheels on the ground or four wheels on the ground (forward or backward) as this may cause serious and expensive damage to the transmission.**
  If it is necessary to tow the vehicle with the rear wheels raised, always use towing dollies under the front wheels.
- **When towing CVT models with the front wheels on towing dollies:**
  - **Turn the ignition key to the OFF position, and secure the steering**

wheel in a straight ahead position with a rope or similar device. Never secure the steering wheel by turning the ignition key to the LOCK position. This may damage the steering lock mechanism.

- **Move the selector lever to the N (Neutral) position.**

- **When towing two wheel drive CVT model with the rear wheels on the ground (if you do not use towing dollies): Always release the parking brake.**

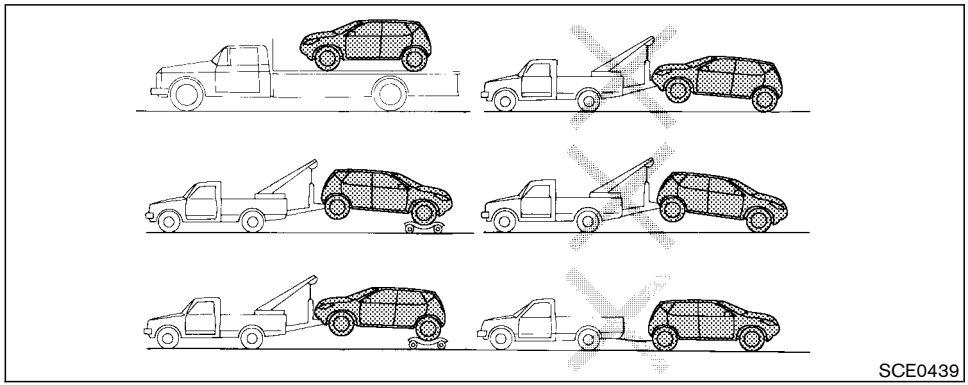

All wheel drive models

All wheel drive models

NISSAN recommends that towing dollies be used when towing your vehicle or the vehicle be placed on a flat bed truck as illustrated.

CAUTION

Never tow CVT AWD models with any of the wheels on the ground as this may cause serious and expensive damage to the drive train.

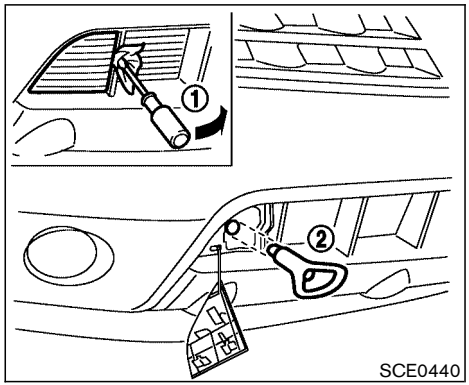

VEHICLE RECOVERY (Freeing a stuck vehicle)

① Remove the towing hook cover from the bumper using a suitable tool.

② Securely install the towing hook stored with jacking tools.

Make sure that the hook is properly secured in the stored place after use.

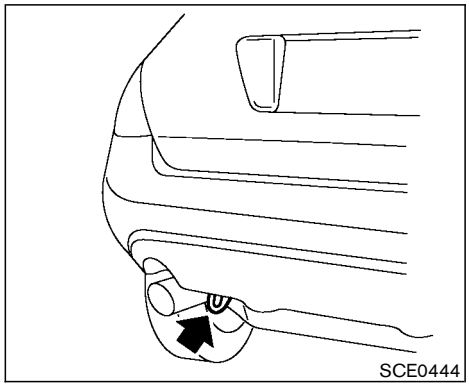

WARNING

- **Stand clear of a stuck vehicle.**
- **Do not spin your tires at high speed. This could cause them to explode and result in serious injury. Parts of your vehicle could also overheat and be damaged.**

CAUTION

- **Use the towing hook only, not other parts of the vehicle. Otherwise, the vehicle body will be damaged.**
- **Use the towing hook only to free a vehicle stuck in sand, snow, mud, etc. Never tow the vehicle for a long distance using only the towing hook.**
- **The towing hook is under tremendous force when used to free a stuck vehicle. Always pull the cable straight out from the front of the vehicle. Never pull on the hook at an angle.**

7 Appearance and care

Cleaning exterior 7-2
Washing 7-2
Waxing 7-2
Removing spots 7-3
Underbody 7-3
Glass 7-3
Aluminum alloy wheels 7-3
Chrome parts 7-3
Cleaning interior 7-3
Floor mats 7-4
Seat belts 7-4
Corrosion protection 7-5
Most common factors contributing to vehicle corrosion 7-5
Environmental factors influence the rate of corrosion 7-5
To protect your vehicle from corrosion 7-5

CLEANING EXTERIOR

In order to maintain the appearance of your vehicle, it is important to take proper care of it.

In the following cases, please wash your vehicle as soon as possible to protect the paint surface.

- After a rainfall to prevent possible damage from acid rain
- After driving on coastal roads
- When contaminants such as soot, bird droppings, tree sap, metal particles or bugs get on the paint surface
- When dust or mud builds up on the surface

Whenever possible, store or park your vehicle inside a garage or in a covered area.

When it is necessary to park outside, park in a shady area or protect the vehicle with a body cover.

Be careful not to scratch the paint surface when putting on or removing the body cover.

WASHING

Thoroughly rinse surface dirt off the vehicle with a wet sponge and plenty of clean water. Clean the vehicle thoroughly using a mild soap such as Nissan Car Wash, or a general purpose dishwashing liquid mixed with clean, lukewarm (never hot) water.

CAUTION

- **Do not use strong household soap, strong chemical detergents, gasoline or solvents.**
- **Do not wash the vehicle in direct sunlight or while the vehicle body is hot, as the surface may become water-spotted.**
- **Avoid using tight-napped or rough cloths, such as washing mitts. Care must be taken when removing caked-on dirt or other foreign substances so that the paint surface is not scratched or damaged.**

Rinse the vehicle again with plenty of clean water.

Inside flanges, seams and folds on the doors, hatches and hood are particularly vulnerable to the effects of road salt. Therefore, these areas must be regularly cleaned. Make sure that the drain holes in the lower edge of the door are open. Spray water under the body and in the wheel wells to loosen the dirt and wash away road salt.

Avoid leaving water spots on the paint surface by using a damp chamois to dry the vehicle.

WAXING

Regular waxing protects the paint surface and helps retain new vehicle appearance. After waxing, polishing is recommended to remove built-up residue and to avoid a weathered appearance.

If you wish to wax your vehicle, only use a wax specified for use over clear coats, such as Nissan Liquid or Spray Wax. Your NISSAN dealer can assist you in choosing the proper product.

- Wax your vehicle only after a thorough washing. Follow the instructions supplied with the wax.
- Do not use a wax containing any abrasives, cutting compounds or cleaners that may damage the vehicle finish.
- If the surface does not polish easily, use a road tar remover and wax again.

Machine compounding or aggressive polishing on a base coat/clear coat paint finish may dull the finish or leave swirl marks.

REMOVING SPOTS

Remove tar and oil spots, industrial dust, insects, and tree sap as quickly as possible from the surface of the paint to avoid lasting damage or staining. Special cleaning products are available at your NISSAN dealer or any automotive accessory store.

UNDERBODY

In areas where road salt is used in winter, the underbody must be cleaned regularly. This will prevent dirt and salt from building up and causing underbody and suspension corrosion. Before the winter period and again in the spring, the underseal must be checked and, if necessary, re-treated.

GLASS

Use glass cleaner to remove smoke and dust film from the glass surfaces. It is normal for glass to become coated with a film after the vehicle is parked in the hot sun. Glass cleaner and a soft cloth will easily remove this film.

CAUTION

When cleaning the inside of the window, do not use sharp-edged tools, abrasive cleaners or chlorine based disinfectant cleaners. They could damage the electrical conductors, radio antenna elements or rear window defogger elements.

ALUMINUM ALLOY WHEELS

Wash regularly, especially during winter months in areas where road salt is used. Salt could discolor the wheel if not removed.

CHROME PARTS

Clean all chrome parts regularly with a non-abrasive chrome polish to maintain the finish.

CLEANING INTERIOR

Occasionally remove loose dust from the interior trim, plastic parts and seats using a vacuum cleaner or soft brush. Wipe the vinyl and leather surfaces with a clean, soft cloth dampened in mild soap solution, then wipe clean with a dry soft cloth. Before using any fabric protector, read the manufacturer's recommendations. Some fabric protectors contain chemicals that may stain or bleach the seat material.

Use a cloth dampened only with water, to clean the meter and gauge lens.

CAUTION

- **Never use gasoline, thinner, or any similar material.**
- **The leather seats should be regularly coated with a leather wax like saddle soap. Never use car wax.**
- **Never use fabric protectors unless recommended by the manufacturer.**
- **Do not use glass or plastic cleaner on meter or gauge lens covers. It may damage the lens cover.**

FLOOR MATS

The use of Genuine Nissan floor mats can extend the life of your vehicle carpet and make it easier to clean the interior. **No matter what mats are used, be sure they are fitted for your vehicle and are properly positioned in the footwell to prevent interference with pedal operation.** Mats should be maintained with regular cleaning and replaced if they become excessively worn.

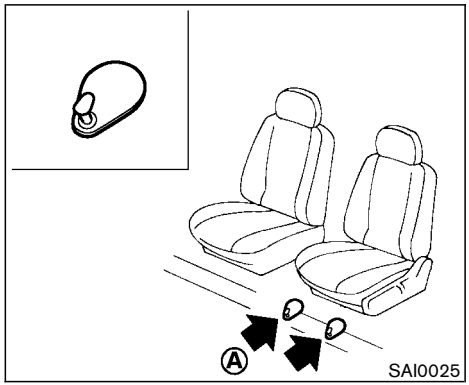

Floor mat positioning aid (Driver side only)

This model includes a front floor mat bracket (A) to act as a floor mat positioning aid. NISSAN floor mats have been specially designed for your vehicle model. The driver's side floor mat has a grommet hole incorporated in it. Simply position the mat by placing the floor mat bracket through the floor mat grommet hole while centering the mat in the floorpan contour.

Periodically check to make certain that the mats are properly positioned.

SEAT BELTS

The seat belts can be cleaned by wiping them with a sponge dampened in a mild soap solution. Allow the belts to dry completely before using them.

WARNING

Do not allow wet belts to roll up in the retractor. NEVER use bleach, dye, or chemical solvents since these may severely weaken the seat belt webbing.

CORROSION PROTECTION

MOST COMMON FACTORS CONTRIBUTING TO VEHICLE CORROSION:

- The accumulation of moisture-retaining dirt and debris in body panel sections, cavities, and other areas.
- Damage to paint and other protective coatings caused by gravel and stone chips or minor traffic accidents.

ENVIRONMENTAL FACTORS INFLUENCE THE RATE OF CORROSION:

Moisture

Accumulation of sand, dirt and water on the vehicle body underside can accelerate corrosion. Wet floor coverings will not dry completely inside the vehicle, and should be removed for drying to avoid floor panel corrosion.

Relative humidity

Corrosion will be accelerated in areas of high relative humidity, especially those areas where the temperatures stay above freezing and where atmospheric pollution exists and road salt is used.

Temperature

A temperature increase will accelerate the rate of corrosion to those parts which are not well ventilated.

Air pollution

Industrial pollution, the presence of salt in the air in coastal areas, or heavy road salt use will accelerate the corrosion process. Road salt will also accelerate the disintegration of paint surfaces.

TO PROTECT YOUR VEHICLE FROM CORROSION:

- Wash and wax your vehicle often to keep the vehicle clean.
- Always check for minor damage to the paint and repair it as soon as possible.
- Keep drain holes at the bottom of the doors open to avoid water accumulation.
- Check the underbody for accumulation of sand, dirt or salt. If present, wash with water as soon as possible.

CAUTION

- **NEVER remove dirt, sand or other debris from the passenger compartment by washing it out with a hose. Remove dirt with a vacuum cleaner or broom.**
- **Never allow water or other liquids to come in contact with electronic components inside the vehicle as this may damage them.**

Chemicals used for road surface de-icing are extremely corrosive. They accelerate corrosion and deterioration of underbody components such as the exhaust system, fuel and brake lines, brake cables, floor pan and fenders.

In winter, the underbody must be cleaned periodically.

For additional protection against rust and corrosion, which may be required in some areas, consult your local NISSAN dealer.

MEMO

8 Maintenance and do-it-yourself

Maintenance requirements 8-2
General maintenance 8-2
Explanation of general maintenance items 8-2
Maintenance precautions 8-5
Engine compartment check locations 8-7
Engine cooling system 8-8
Checking engine coolant level 8-8
Changing engine coolant 8-9
Engine oil 8-9
Checking engine oil level 8-9
Changing engine oil 8-10
Changing engine oil filter 8-11
CVT fluid 8-12
Power steering fluid 8-12
Brake fluid 8-12
Window washer fluid 8-13
Battery 8-14
Jump starting 8-15
Drive belts 8-15
Spark plugs 8-16
Replacing spark plugs 8-16
Air cleaner 8-16
Windshield wiper blades 8-17
Cleaning 8-17
Replacing 8-18
Rear window wiper blade 8-19
Parking brake and brake pedal 8-19
Checking parking brake 8-19
Checking brake pedal 8-20
Brake booster 8-20
Fuses 8-21
Engine compartment 8-21
Passenger compartment 8-22
Keyfob battery replacement 8-22
Lights 8-24
Headlights 8-25
Exterior and interior lights 8-26
Wheels and tires 8-27
Tire pressure 8-27
Types of tires 8-28
Tire chains 8-29
Changing wheels and tires 8-30

MAINTENANCE REQUIREMENTS

Your new NISSAN has been designed to have minimum maintenance requirements with longer service intervals to save you both time and money. However, some day-to-day and regular maintenance is essential to maintain your NISSAN's good mechanical condition, as well as its emission and engine performance.

It is the owner's responsibility to make sure that scheduled maintenance, as well as general maintenance, is performed.

As the vehicle owner, you are the only one who can ensure that your vehicle receives the proper maintenance care. You are a vital link in the maintenance chain.

Scheduled maintenance:

For your convenience, both required and optional scheduled maintenance items are described and listed in your "Service and Maintenance Guide". You must refer to that guide to ensure that necessary maintenance is performed on your NISSAN at regular intervals.

General maintenance:

General maintenance includes those items which should be checked during normal day-to-day operation of the vehicle. They are essential if your vehicle is to continue to operate properly. It is your responsibility to perform these procedures regularly as prescribed.

Performing general maintenance checks require minimal mechanical skill and only a few general automotive tools.

These checks or inspections can be done by yourself, a qualified technician or, if you prefer, your NISSAN dealer.

Where to go for service:

If maintenance service is required or your vehicle appears to malfunction, have the systems checked and tuned by a NISSAN dealer.

NISSAN technicians are well-trained specialists and are kept up to date with the latest service information through technical bulletins, service tips, and in-dealership training programs. They are completely qualified to work on NISSAN vehicles **before** they work on your vehicle, rather than after they have worked on it.

You can be confident that your NISSAN dealer's service department performs the best job to meet the maintenance requirements of your vehicle — in a reliable and economic way.

GENERAL MAINTENANCE

During the normal day-to-day operation of the vehicle, general maintenance should be performed regularly as prescribed in this section. If you detect any unusual sounds, vibrations or smell, be sure to check for the cause or have your NISSAN dealer check it promptly. In addition, you should notify your NISSAN dealer if you think that repairs are required.

When performing any checks or maintenance work, closely observe the "Maintenance precautions" later in this section.

EXPLANATION OF GENERAL MAINTENANCE ITEMS

Additional information on the following items with "*" is found later in this section.

Outside the vehicle

The maintenance items listed here should be performed from time to time, unless otherwise specified.

Tires*: Check the pressure with a gauge at least once a month and always prior to long distance trips. If necessary, adjust the pressure in all tires, including the spare, to the pressure specified. Check carefully for damage, cuts or excessive wear.

Wheel nuts*: When checking the tires, make sure no nuts are missing, and check for any

loose nuts. Tighten if necessary.

Tire rotation*: Tires should be rotated every 7,500 miles (12,000 km). However, the timing for tire rotation may vary according to your driving habits and road surface conditions.

Wheel alignment and balance: If the vehicle pulls to either side while driving on a straight and level road, or if you detect uneven or abnormal tire wear, there may be a need for wheel alignment.

If the steering wheel or seat vibrates at normal highway speeds, wheel balancing may be needed.

For additional information regarding tires, refer to "Important Tire Safety Information" (US) or "Tire Safety Information" (Canada) in the Warranty Information booklet.

Windshield: Clean the windshield on a regular basis. Check the windshield at least every six months for cracks or other damage. Have a damaged windshield repaired by a qualified repair facility.

Windshield wiper blades*: Check for cracks or wear if they do not wipe properly.

Doors and engine hood: Check that all doors and the engine hood operate smoothly. Also make sure that all latches lock securely. Lubricate if necessary. Make sure that the secondary latch keeps the hood from opening when the primary latch is released.

When driving in areas using road salt or other corrosive materials, check lubrication frequently.

Lights*: Clean the headlights on a regular basis. Make sure that the headlights, stop lights, tail lights, turn signal lights, and other lights are all operating properly and installed securely. Also check headlight aim.

Inside the vehicle

The maintenance items listed here should be checked on a regular basis, such as when performing periodic maintenance, cleaning the vehicle, etc.

Warning lights and chimes: Make sure that all warning lights and chimes are operating properly.

Windshield wiper and washer*: Check that the wipers and washer operate properly and that the wipers do not streak.

Windshield defroster: Check that the air comes out of the defroster outlets properly and in good quantity when operating the heater or air conditioner.

Steering wheel: Check for changes in the steering conditions, such as excessive free play, hard steering or strange noises.

Seats: Check seat position controls such as seat adjusters, seatback recliner, etc. to ensure they operate smoothly and that all latches lock securely in every position. Check that the head restraints move up and down smoothly and that the locks hold securely in all latched positions.

Seat belts: Check that all parts of the seat belt system (for example, buckles, anchors, adjusters and retractors) operate properly and smoothly, and are installed securely. Check the belt webbing for cuts, fraying, wear or damage.

Accelerator pedal: Check the pedal for smooth operation and make sure the pedal does not catch or require uneven effort. Keep the floor mats away from the pedal.

Brakes: Check that the brakes do not pull the vehicle to one side when applied.

Brake pedal and booster*: Check the pedal for smooth operation and make sure it has the proper distance under it when depressed fully. Check the brake booster function. Be sure to keep floor mats away from the pedal.

Parking brake*: Check that the lever has the proper travel and make sure that the vehicle is held securely on a fairly steep hill when only the parking brake is applied.

Continuously Variable Transmission (CVT) P (Park) position mechanism: On a fairly steep hill check that the vehicle is held securely with the selector lever in the P (Park) position without applying any brakes.

Under the hood and the vehicle

The maintenance items listed here should be checked periodically (for example, each time you check the engine oil or refuel).

Windshield washer fluid*: Check that there is adequate fluid in the tank.

Engine coolant level*: Check the coolant level when the engine is cold.

Radiator and hoses: Check the front of the radiator and clean off any dirt, insects, leaves, etc., that may have accumulated. Make sure the hoses have no cracks, deformation, deterioration or loose connections.

Brake fluid level*: Make sure that the brake fluid level is between the MAX and MIN lines on the reservoir.

Battery*: Check the fluid level in each cell. It should be between the MAX and MIN lines. Vehicles operated in high temperatures or under severe conditions require frequent checks of the battery fluid level.

Engine drive belts*: Make sure that no belt is frayed, worn, cracked or oily.

Engine oil level*: Check the level on the dipstick after parking the vehicle on a level spot and turning off the engine.

Power steering fluid level* and lines: Check the level in the reservoir tank with the engine off. Check the lines for proper attachment, leaks, cracks, etc.

Exhaust system: Make sure there are no loose supports, cracks or holes. If the sound of the exhaust seems unusual or there is a smell of exhaust fumes, immediately locate the trouble and correct it. (See “Precautions when starting and driving” in the “5. Starting and driving” section for exhaust gas (carbon monoxide).)

Underbody: The underbody is frequently exposed to corrosive substances such as those used on icy roads or to control dust. It is very important to remove these substances, otherwise rust will form on the floor pan, frame, fuel lines and around the exhaust system. At the end of winter, the underbody should be thoroughly flushed with plain water, being careful to clean those areas where mud and dirt may accumulate. For additional information, see “Cleaning exterior” in the “7. Appearance and care” section.

Fluid leaks: Check under the vehicle for fuel, oil, water or other fluid leaks after the vehicle has been parked for a while. Water dripping from the air conditioner after use is normal. If you should notice any leaks or if gasoline fumes are evident, check for the cause and have it corrected immediately.

MAINTENANCE PRECAUTIONS

When performing any inspection or maintenance work on your vehicle, always take care to prevent serious accidental injury to yourself or damage to the vehicle. The following are general precautions which should be closely observed.

WARNING

- **Park the vehicle on a level surface, apply the parking brake securely and block the wheels to prevent the vehicle from moving. Move the selector lever to the P (Park) position.**
- **Be sure the ignition key is OFF or LOCK when performing any parts replacement or repairs.**
- **Your vehicle is equipped with an automatic engine cooling fan. It may come on at any time without warning, even if the ignition key is in the OFF position and the engine is not running. To avoid injury, always disconnect the negative battery cable before working near the fan.**
- **If you must work with the engine running, keep your hands, clothing, hair and tools away from moving fans, belts and any other moving parts.**
- **It is advisable to secure or remove any loose clothing and any jewelry, such as rings, watches, etc. before working on your vehicle.**
- **Always wear eye protection whenever you work on your vehicle.**
- **If you must run the engine in an enclosed space such as a garage, be sure there is proper ventilation for exhaust gases to escape.**
- **Never get under the vehicle while it is supported only by a jack. If it is necessary to work under the vehicle, support it with safety stands.**
- **Keep smoking materials, flame and sparks away from fuel and the battery.**
- **On gasoline engine models with the Multiport Fuel Injection (MFI) System, the fuel filter or fuel lines should be serviced by a NISSAN dealer because the fuel lines are under high pressure even when the engine is off.**

CAUTION

- **Do not work under the hood while the engine is hot. Turn off the engine and wait until it cools down.**
- **Never connect or disconnect either the battery or any transistorized component connector while the ignition key is on.**
- **Never leave the engine or the CVT related component harness connector disconnected while the ignition key is on.**
- **Avoid direct contact with used engine oil and coolant. Improperly disposed engine oil, engine coolant and/or other vehicle fluids can hurt the environment. Always conform to local regulations for disposal of vehicle fluid.**

This “8. Maintenance and do-it-yourself” section gives instructions regarding only those items which are relatively easy for an owner to perform.

A genuine NISSAN Service Manual is also available. See “Owner’s Manual/Service Manual order information” in the “9. Technical and consumer information” section.

You should be aware that incomplete or improper servicing may result in operating difficulties or excessive emissions, and could affect your warranty coverage. **If in doubt about any servicing, have it done by your NISSAN dealer.**

ENGINE COMPARTMENT CHECK LOCATIONS

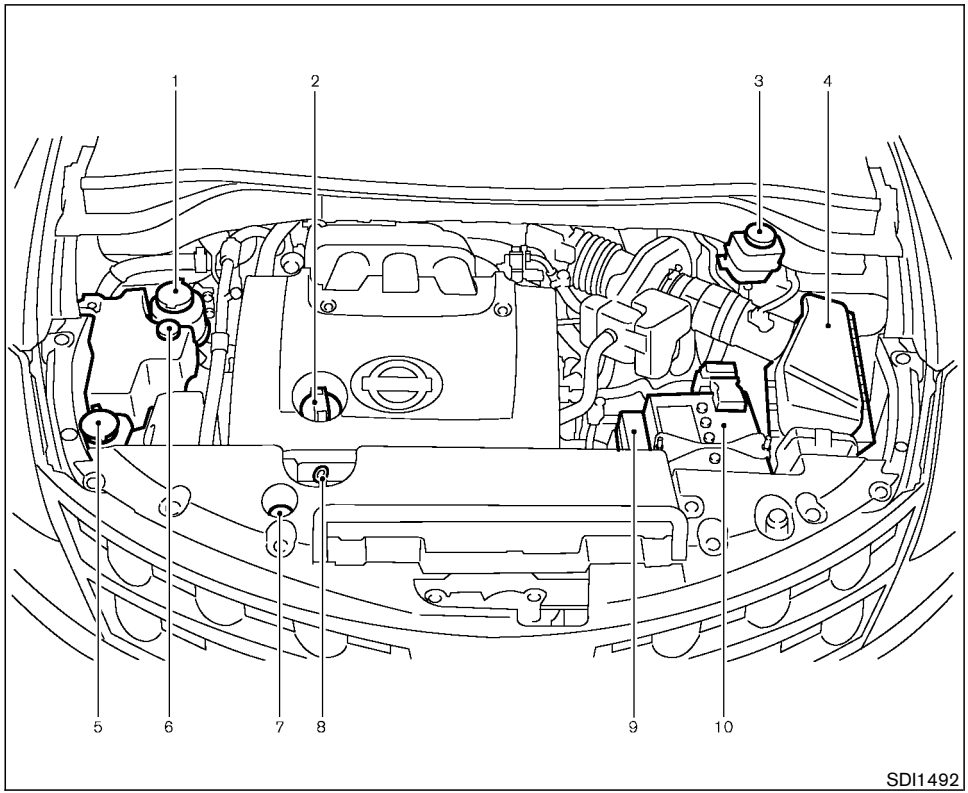

1. Power steering fluid reservoir
2. Engine oil filler cap
3. Brake fluid reservoir
4. Air cleaner
5. Windshield washer fluid reservoir
6. Engine coolant reservoir
7. Radiator filler cap
8. Engine oil dipstick
9. Fuse/fusible link holder
10. Battery

ENGINE COOLING SYSTEM

The engine cooling system is filled at the factory with a high-quality, year-round, anti-freeze coolant solution. The anti-freeze solution contains rust and corrosion inhibitors, therefore additional cooling system additives are not necessary.

CAUTION

When adding or replacing coolant, be sure to use only a genuine NISSAN anti-freeze coolant or equivalent with the proper mixture ratio of 50% anti-freeze and 50% demineralized water/distilled water. The use of other types of coolant solutions may damage your engine cooling system.

Outside temperature down to		Anti-freeze	Demineralized water/ distilled water
°C	°F		
–35	–30	50%	50%

WARNING

- **Never remove the radiator cap when the engine is hot. Serious burns could be caused by high pressure fluid escaping from the radiator. Wait until the engine and radiator cool down.**
- **See "If your vehicle overheats" in the "6. In case of emergency" section.**
- **The radiator is equipped with a pressure cap. To prevent engine damage, use only a genuine NISSAN radiator cap.**

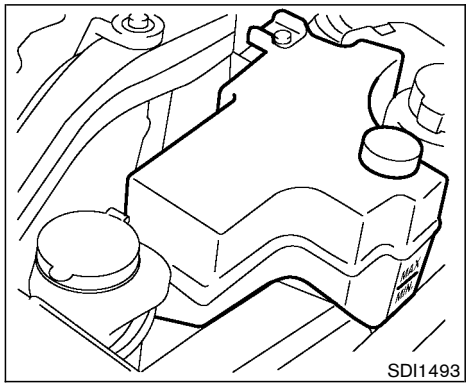

CHECKING ENGINE COOLANT LEVEL

Check the coolant level in the reservoir tank when the engine is cold. If the coolant level is below MIN, add coolant up to the MAX level. If the reservoir tank is empty, add the coolant to the reservoir tank up to the MAX level.

If the engine cooling system frequently requires coolant, have it checked by your NISSAN dealer.

CHANGING ENGINE COOLANT

Contact your NISSAN dealer if replacement is required.

- Major cooling system repairs should be performed by your NISSAN dealer. The service procedures can be found in the appropriate NISSAN Service Manual.
- Improper servicing can result in reduced heater performance and engine overheating.

WARNING

- **To avoid being scalded, never change the coolant when the engine is hot.**
- **Never remove the radiator cap when the engine is hot. Serious burns could be caused by high pressure fluid escaping from the radiator.**
- **Avoid direct skin contact with used coolant. If skin contact is made, wash thoroughly with soap or hand cleaner as soon as possible.**
- **Keep coolant out of reach of children and pets.**

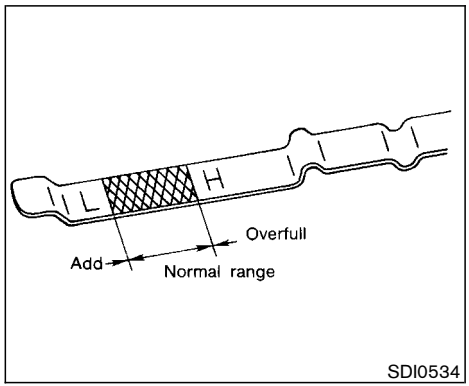

CHECKING ENGINE OIL LEVEL

1. Park the vehicle on a level surface and apply parking brake.
2. Run the engine until it reaches operating temperature.
3. Turn off the engine. **Wait more than 10 minutes for the oil to drain back into the oil pan.**
4. Remove the dipstick and wipe it clean. Reinsert it all the way.
5. Remove the dipstick again and check the oil level. It should be between the H and L marks. If the oil level is below the L mark, remove the oil filler cap and pour recommended oil through the opening. **Do not overfill.**
6. Recheck oil level with dipstick.

It is normal to add some oil between oil maintenance intervals or during the break-in period, depending on the severity of operating conditions.

CAUTION

Oil level should be checked regularly. Operating with insufficient amount of oil can damage the engine, and such damage is not covered by warranty.

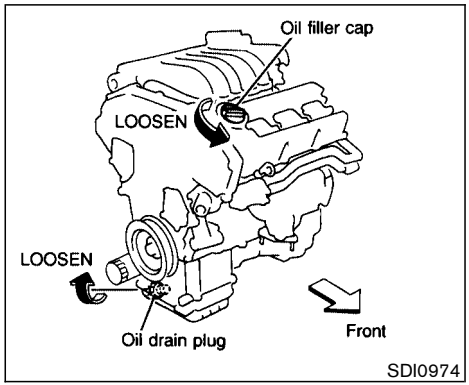

CHANGING ENGINE OIL

1. Park the vehicle on a level surface and apply the parking brake.
2. Run the engine until it reaches operating temperature.
3. Turn the engine off and **wait more than 10 minutes**.
4. Place a large drain pan under the drain plug.
5. Remove the oil filler cap.
6. Remove the drain plug with a wrench and completely drain the oil.

   If oil filter is to be changed, remove and replace it at this time. See later in “Engine oil” for changing engine oil filter.

CAUTION

Be careful not to burn yourself, as the engine oil is hot.

- **Waste oil must be disposed of properly.**
- **Check your local regulations.**

7. Clean and re-install the drain plug with a new washer. Securely tighten the drain plug with a wrench.

   Drain plug tightening torque:

   22 to 29 ft-lb
   (29 to 39 N·m)

   Do not use excessive force.

8. Refill engine with recommended oil and install the cap securely.

CAUTION

Never pull out the oil level gauge while filling engine oil.

See “Capacities and recommended fuel/lubricants” in the “9. Technical and consumer information” section for drain and refill capacity. The drain and refill capacity depends on the oil temperature and drain time. Use these specifications for reference only. Always use the dipstick to determine the proper amount of oil in the engine.

9. Start the engine.

   Check for leakage around the drain plug. Correct as required.

10. Turn the engine off and **wait more than 10 minutes**. Check the oil level with the dipstick. Add engine oil if necessary.
11. Dispose of waste oil properly.

WARNING

- **Prolonged and repeated contact with**

used engine oil may cause skin cancer.

- **Try to avoid direct skin contact with used oil. If skin contact is made, wash thoroughly with soap or hand cleaner as soon as possible.**
- **Keep used engine oil out of reach of children.**

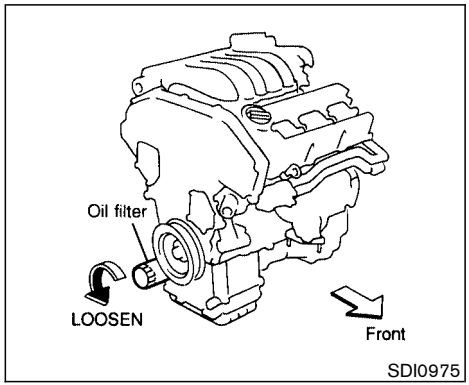

CHANGING ENGINE OIL FILTER

1. Park the vehicle on a level surface and apply the parking brake.
2. Turn the engine off.
3. Loosen the oil filter with an oil filter wrench. Remove the oil filter by turning it by hand.

CAUTION

Be careful not to burn yourself, as the engine oil may be hot.

4. Wipe the engine oil filter mounting surface with a clean rag.

   Be sure to remove any old rubber gasket remaining on the mounting surface of the engine.
5. Coat the rubber gasket on the new filter with clean engine oil.
6. Screw in the oil filter until a slight resistance is felt, then tighten additionally more than 2/3 turn.

   Oil filter tightening torque:

   11 to 15 ft-lb (15 to 20 N·m)
7. Start the engine and check for leakage around the oil filter. Correct as required.
8. Turn the engine off and wait several minutes. Check the oil level. Add engine oil if necessary.

CVT FLUID

Contact your NISSAN dealer if checking or replacement is required.

CAUTION

- **Use only Genuine NISSAN CVT Fluid NS-2. Do not mix with other fluids.**
- **Using transmission fluid other than Genuine NISSAN CVT Fluid NS-2 will damage the CVT transmission, which is not covered by the NISSAN new vehicle limited warranty.**

The specified CVT fluid is also described on caution labels located in the engine compartment.

POWER STEERING FLUID

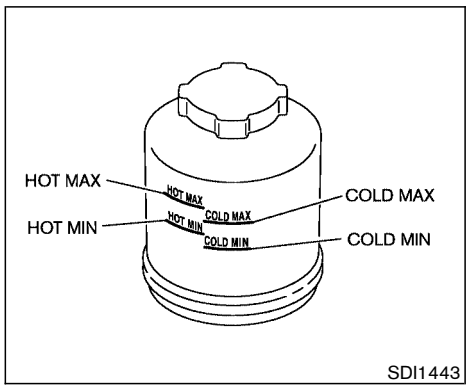

Check the fluid level in the reservoir tank.

The fluid level should be checked using the HOT range at fluid temperatures of 122 to 176°F (50 to 80°C) or using the COLD range at fluid temperatures of 32 to 86°F (0 to 30°C).

CAUTION

- **Do not overfill.**
- **Use Genuine Nissan PSF or equivalent.**

BRAKE FLUID

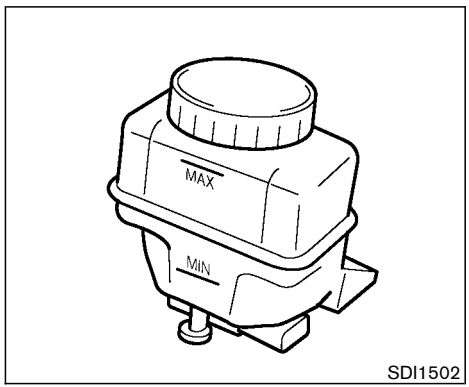

Check the fluid level in the reservoir. If the fluid is below the MIN line or the brake warning light comes on, add **DOT 3** fluid up to the MAX line. If fluid must be added frequently, the system should be thoroughly checked by your NISSAN dealer.

WARNING

Use only new fluid. Old, inferior, or contaminated fluid may damage the brake system. The use of improper fluids can damage the brake system and affect the

WINDOW WASHER FLUID

vehicle's stopping ability.

CAUTION

Do not spill the fluid on painted surfaces. This will damage the paint. If fluid is spilled, wash with water.

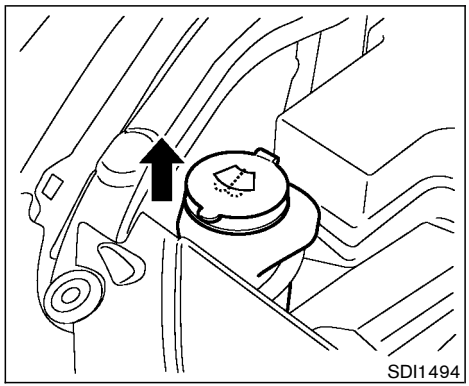

Add fluid when the low washer fluid warning light comes on. Add a washer solvent to the water for better cleaning. In the winter season, add a windshield washer anti-freeze. Follow the manufacturer's instructions for the mixture ratio.

WARNING

Anti-freeze is poisonous and should be stored carefully in marked containers out of the reach of children.

CAUTION

Do not substitute engine anti-freeze coolant for window washer solution. This may result in damage to the paint.

BATTERY

- Keep the battery surface clean and dry. Any corrosion should be washed off with a solution of baking soda and water.
- Make certain the terminal connections are clean and securely tightened.
- If the vehicle is not to be used for 30 days or longer, disconnect the (—) negative battery terminal cable to prevent discharging it.

WARNING

- **Do not expose the battery to flames or electrical sparks. Hydrogen gas generated by battery action is explosive. Do not allow battery fluid to contact your skin, eyes, fabrics, or painted surfaces. After touching a battery or battery cap, do not touch or rub your eyes. Thoroughly wash your hands. If the acid contacts your eyes, skin or clothing, immediately flush with water for at least 15 minutes and seek medical attention.**
- **Do not operate the vehicle if the fluid in the battery is low. Low battery fluid can cause a higher load on the battery which can generate heat, reduce battery life, and in some cases lead to an explosion.**
- **When working on or near a battery, always wear suitable eye protection and remove all jewelry.**
- **Battery posts, terminals and related accessories contain lead and lead compounds. Wash hands after handling.**
- **Keep the battery out of the reach of children.**

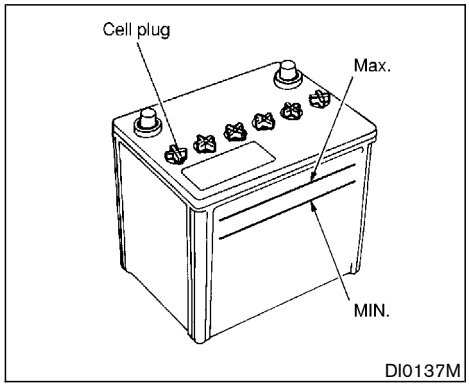

Check the fluid level in each cell. It should be between the MAX and MIN lines.

If the side of the battery is not visible, the electrolyte level can be checked through each filler opening as illustrated.

If it is necessary to add fluid, add only distilled water to bring the level to the indicator in each filler opening. **Do not overfill.**

Vehicles operated in high temperatures or under severe conditions require frequent checks of the battery fluid level.

1. Remove the cell plugs.
2. Add distilled water up to the MAX level.
3. Tighten cell plugs.

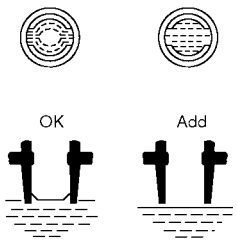

SDI1480

JUMP STARTING

If jump starting is necessary, see “Jump starting” in the “6. In case of emergency” section. If the engine does not start by jump starting, the battery may have to be replaced. Contact your NISSAN dealer.

DRIVE BELTS

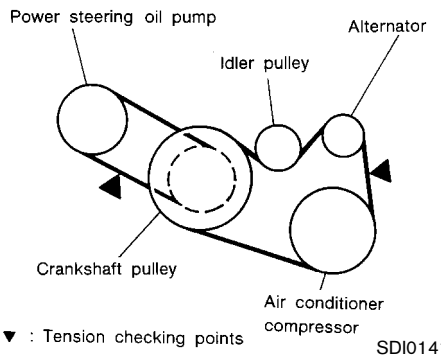

SDI0141

WARNING

Be sure the ignition key is in the OFF or LOCK position. The engine could rotate unexpectedly.

1. Visually inspect each belt for signs of unusual wear, cuts, fraying, oil adhesion or looseness. If the belt is in poor condition or loose, have it replaced or adjusted by your NISSAN dealer.
2. Have the belts checked regularly for condition and tension.

SPARK PLUGS

WARNING

Be sure the engine and ignition switch are off and that the parking brake is engaged securely.

CAUTION

Be sure to use the correct socket to remove the spark plugs. An incorrect socket can damage the spark plugs.

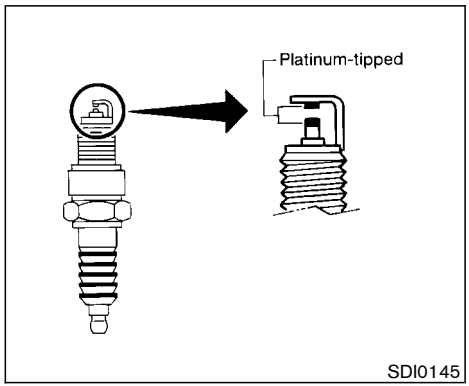

REPLACING SPARK PLUGS

Platinum-tipped spark plugs

It is not necessary to replace the platinum-tipped spark plugs as frequently as the conventional type spark plugs since they will last much longer. Follow the maintenance schedule but, do not reuse them by cleaning or regapping.

If replacement is required, see your NISSAN dealer for servicing.

Always replace with recommended platinum-tipped spark plugs.

AIR CLEANER

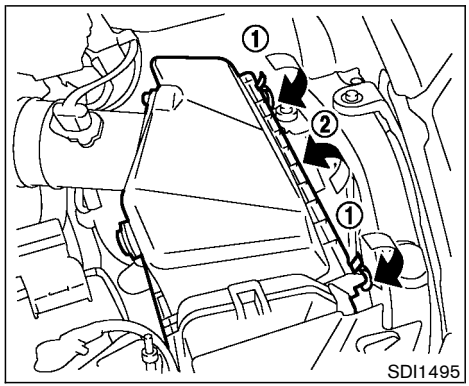

To remove the filter from the air cleaner, push down the lock pins (1) and pull the unit upward (2).

The filter element should not be cleaned and reused. Replace it according to the maintenance log shown in the separate Service and Maintenance Guide. When replacing the filter, wipe the inside of the air cleaner housing and the cover with a damp cloth.

WARNING

- **Operating the engine with the air**

cleaner removed can cause you or others to be burned. The air cleaner not only cleans the air, it stops flame if the engine backfires. If it is not there, and the engine backfires, you could be burned. Do not drive with the air cleaner removed and be careful when working on the engine with the air cleaner removed.

- **Never pour fuel into the throttle body or attempt to start the engine with the air cleaner removed. Doing so could result in serious injury.**

CAUTION

- **After wiper blade replacement, return the wiper arm to its original position.**

  Otherwise it may be damaged when the engine hood is opened.
- **Make sure the wiper blade contacts the glass, otherwise the arm may be damaged from wind pressure.**
- **Worn windshield wiper blades can damage the windshield and impair driver vision.**

CLEANING

If your windshield is not clear after using the windshield washer or if a wiper blade chatters when running, wax or other material may be on the blade or windshield.

Clean the outside of the windshield with a washer solution or a mild detergent. Your windshield is clean if beads do not form when rinsing with clear water.

Clean the blade by wiping it with a cloth soaked in a washer solution or a mild detergent. Then rinse the blade with clear water. If your windshield is still not clear after cleaning the blades and using the wiper, replace the blades.

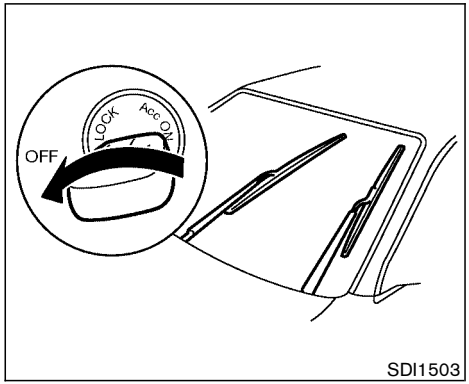

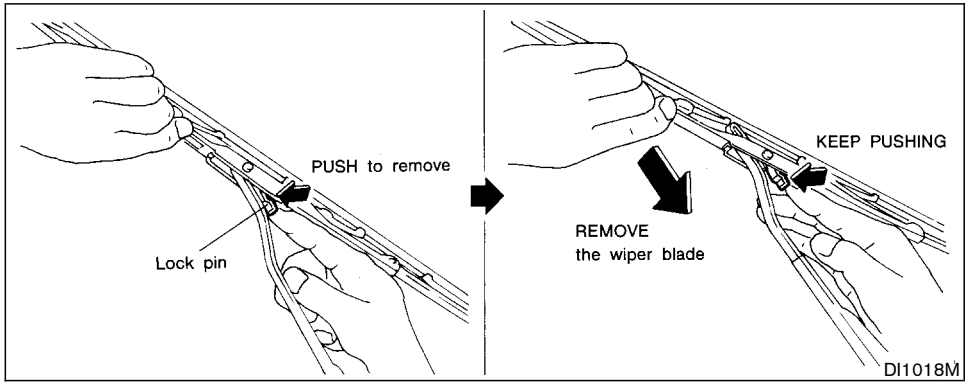

REPLACING

Replace the wiper blades if they are worn.

1. Turn the ignition switch to the ACC or ON position and the windshield wiper switch ON. Turn the ignition switch OFF when the wiper is in the fully up position. The wiper will stop as illustrated.

The wiper should be in the fully up position to avoid scratching the engine hood or wiper arm.

2. Pull the wiper arm up.

Hold the wiper arm to avoid hitting the windshield and damaging the glass.

3. Push the lock pin, then remove the wiper blade.
4. Insert the new wiper blade to the wiper arm until a click sounds.

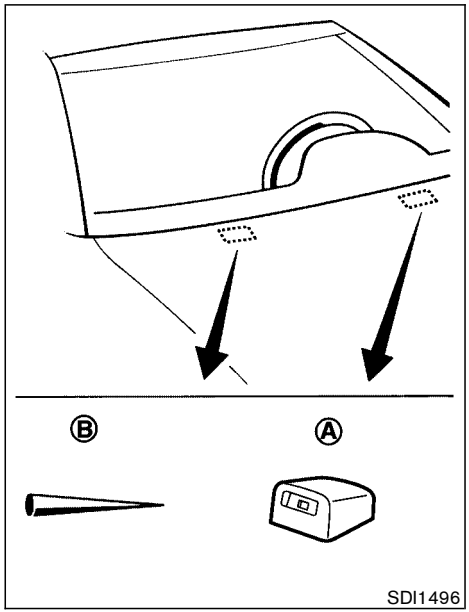

If you wax the surface of the hood, be careful not to let wax get into the washer nozzle. This may clog the nozzle Ⓐ that could cause improper windshield washer operation. If wax gets into the nozzle, unclog it with a needle or small pin Ⓑ.

REAR WINDOW WIPER BLADE

Contact your NISSAN dealer if checking or replacement is required.

PARKING BRAKE AND BRAKE PEDAL

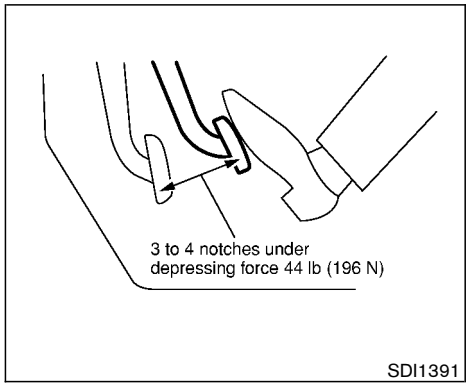

CHECKING PARKING BRAKE

From the released position, depress the parking brake pedal slowly and firmly, and check the distance between the initial and final position of the pedal. If it is out of the range shown above, see your NISSAN dealer.

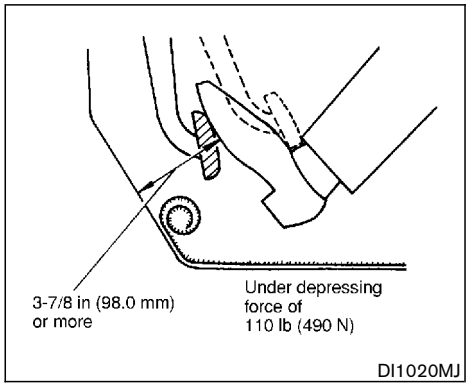

CHECKING BRAKE PEDAL

With the engine running, check the distance between the upper surface of the pedal and the metal floor. If it is out of the range shown above, see your NISSAN dealer.

Self-adjusting brakes

Your vehicle is equipped with self-adjusting brakes.

The disc-type brakes self-adjust every time the brake pedal is applied.

WARNING

See your NISSAN dealer and have it checked if the brake pedal height does not return to normal.

Brake pad wear indicators

The disc brake pads on your vehicle have audible wear indicators. When a brake pad requires replacement, it will make a high pitched scraping or screeching sound when the vehicle is in motion whether or not the brake pedal is depressed. Have the brakes checked as soon as possible if the wear indicator sound is heard.

Under some driving or climate conditions, occasional brake squeak, squeal or other noise may be heard. Occasional brake noise during light to moderate stops is normal and does not affect the function or performance of the brake system.

Proper brake inspection intervals should be followed. For additional information, see the separate Service and Maintenance Guide.

BRAKE BOOSTER

Check the brake booster function as follows:

1. With the engine off, press and release the brake pedal several times. When brake pedal movement (distance of travel) remains the same from one pedal application to the next, continue on to the next step.
2. While depressing the brake pedal, start the engine. The pedal height should drop a little.
3. With the brake pedal depressed, stop the engine. Keeping the pedal depressed for about 30 seconds, the pedal height should not change.
4. Run the engine for one minute without depressing the brake pedal, then turn it off. Depress the brake pedal several times. The pedal travel distance will decrease gradually with each depression as the vacuum is released from the booster.

If the brakes do not operate properly, see your NISSAN dealer.

FUSES

CAUTION

Never use a fuse of higher amperage rating than that specified on the fuse box cover. This could damage the electrical system or cause a fire.

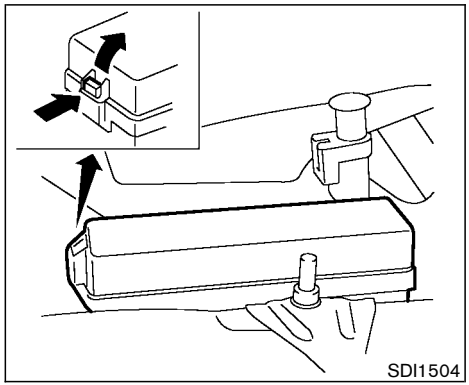

ENGINE COMPARTMENT

If any electrical equipment does not operate, check for an open fuse.

1. Be sure the ignition key and headlight switch are OFF.
2. Open the engine hood.
3. Remove the fusible link cover.
4. Remove the fuse with the fuse puller.
5. If the fuse is open, replace it with a new fuse.
6. If a new fuse also opens, have the electrical system checked and repaired by your NISSAN dealer.

Fusible links

If any electrical equipment does not operate and fuses are in good condition, check the fusible links. If any of these fusible links are melted, replace only with genuine NISSAN parts.

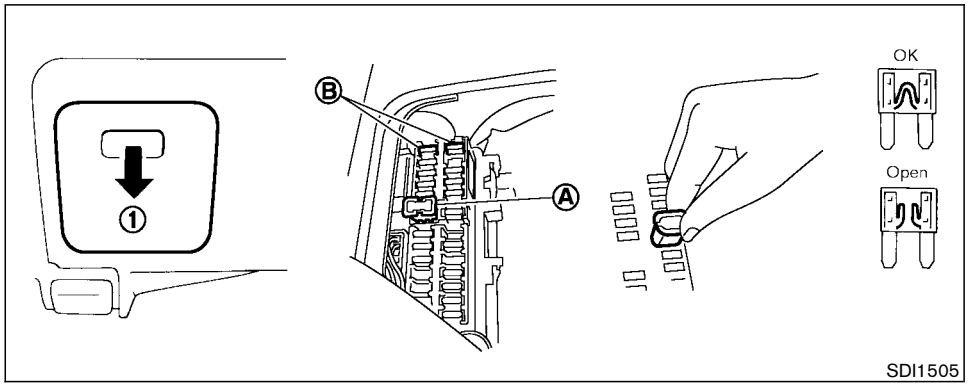

PASSENGER COMPARTMENT

If any electrical equipment does not operate, check for an open fuse.

1. Be sure the ignition key and the headlight switch are OFF.
2. Pull to open the fuse box lid (1).
3. Pinch the fuse perpendicularly with the fuse puller (A) and pull it out.
4. If the fuse is open, replace it with a new fuse (B).
5. If a new fuse also opens, have the electrical system checked and repaired by your NISSAN dealer.

KEYFOB BATTERY REPLACEMENT

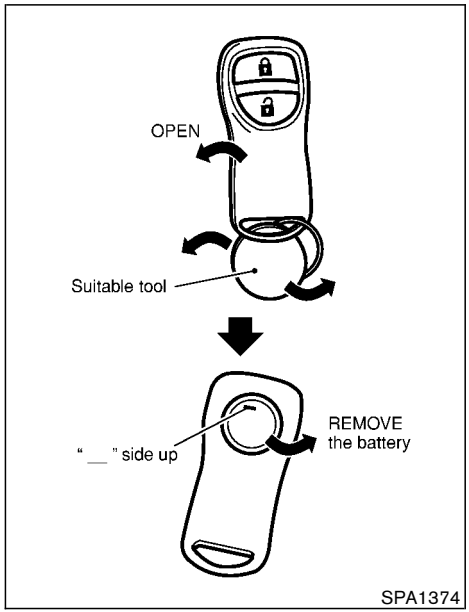

Replace the battery as follows:

1. Open the lid using a suitable tool.
2. Replace the battery with a new one. Recommended battery: Sanyo CR2025 or equivalent

Make sure that the ⊕ side faces the bottom case.

3. Close the lid securely.
4. Push the keyfob button two or three times to check its operation.

See your NISSAN dealer if you need any assistance for replacement.

If the battery is removed for any reason other than replacement, perform step 4 above.

- **Be careful not to touch a circuit board and a battery terminal.**
- **An improperly disposed battery can harm the environment. Always confirm local regulations for battery disposal.**
- **The keyfob is water-resistant; however, if it does get wet, immediately wipe completely dry.**
- **When changing batteries, do not let dust or oil get on the keyfob.**

FCC Notice:

Changes or modifications not expressly approved by the manufacturer compliance could void the user's authority to operate the equipment. This device complies with Part 15 of the FCC Rules and RSS-210 of Industry Canada. Operation is subject to the following two conditions: (1) This device may not cause harmful interference, and (2) this device must accept any interference received, including interference that may cause undesired operation of the device.

LIGHTS

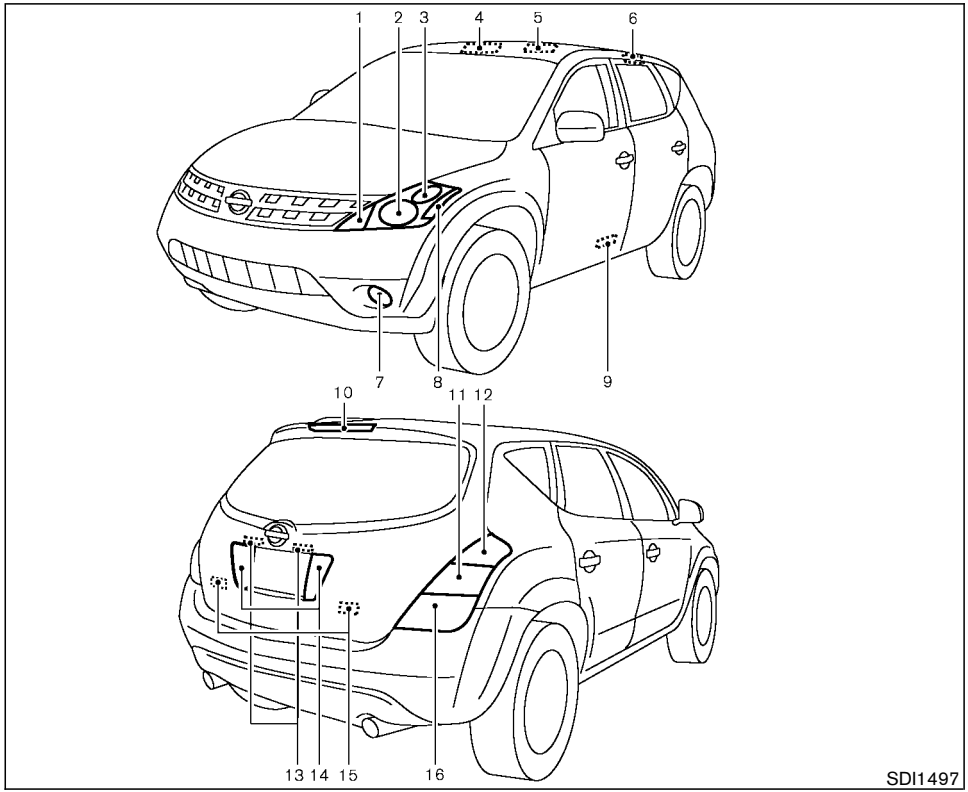

1. Front turn signal light or front park light
2. Headlight (low-beam, high-beam)
3. Front park light or front turn signal light
4. Map light
5. Ceiling light
6. Rear personal light
7. Front fog light (if so equipped)/Daytime, running light (for Canada)
8. Front side marker light
9. Step light
10. High-mounted stop light

Rear combination lights

11. Turn signal light (Rear combination lights)
12. Side marker light (Rear combination lights)
13. License plate lights
14. Back-up light
15. Luggage light
16. Stop/tail light (Rear combination lights)

HEADLIGHTS

Replacing

If replacement is required, see a NISSAN dealer.

Xenon headlight bulb:

WARNING

HIGH VOLTAGE

When xenon headlights are on, they produce a high voltage. To prevent an electric shock, never attempt to modify or disassemble the headlight assembly. Always have your xenon headlights replaced at a NISSAN dealer. For additional information, see "Headlight and turn signal switch" in the "2. Instruments and controls" section.

Halogen headlight bulb:

The headlight is a semi-sealed beam type which uses a replaceable headlight (halogen) bulb. If replacement is required, see your NISSAN dealer.

CAUTION

- **High pressure halogen gas is sealed inside the halogen bulb. The bulb may break if the glass envelope is scratched or the bulb is dropped.**
- **When handling the bulb, do not touch the glass envelope.**
- **Do not touch the bulb.**
- **Use the same number and wattage as originally installed:**
  Bulb no. (Wattage)
  D2R (35W) - Xenon low/high-beam
  or
  HB5 (65/55W) - Halogen low/high-beam
- **Do not leave the bulb out of the headlight reflector for a long period of time as dust, moisture, and smoke may enter the headlight body and affect the performance of the headlight.**

EXTERIOR AND INTERIOR LIGHTS

Item	Wattage (W)	Bulb No.
Front turn signal*	21	T20
Front park light*	3.8	T10 C-2F
Front side marker light*	3.8	T10 C-2F
Front fog light (if so equipped)*	51	HB4
Rear combination light*		
Turn signal	21	T20
Stop/Tail	21/5	T20
Side marker light	5	T10
Back-up*	16	21CP
License plate light*	5	T10
High-mounted stop light*	2.4	LED
Ceiling light	8	
Map light	8	
Rear personal light*	8	
Step light*	2.7	161
Luggage light	8	158
Vanity mirror light (if so equipped)	2	—

*: See a NISSAN dealer for replacement.

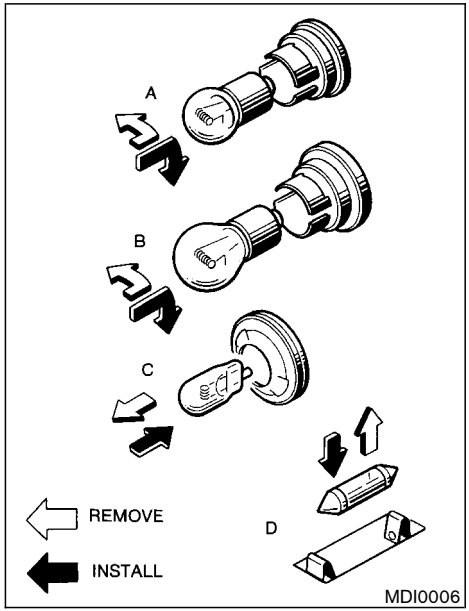

Replacement procedures

All other lights are either type A, B, C or D. When replacing a bulb, first remove the lens and/or cover.

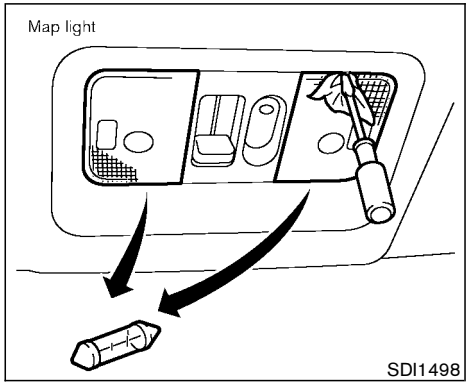

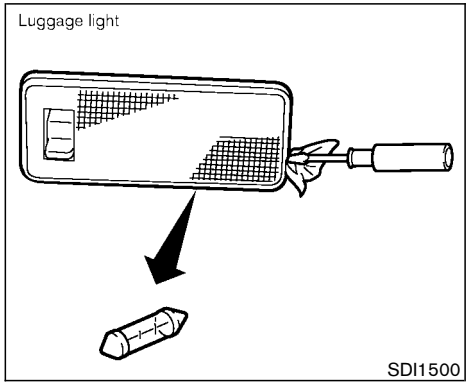

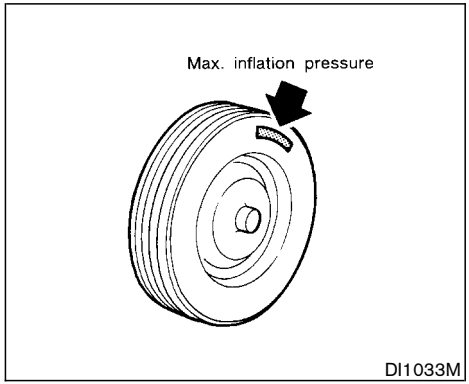

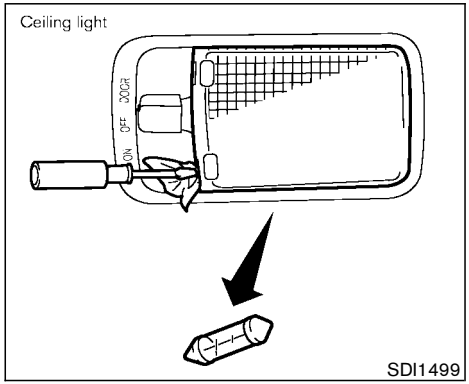

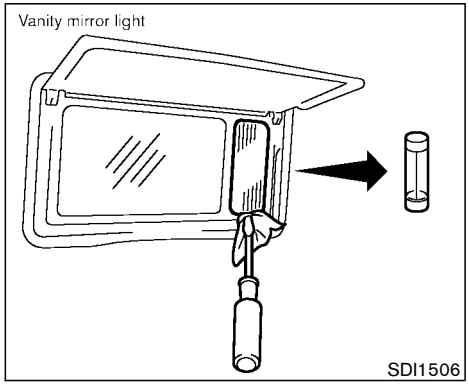

If you have a flat tire, see “Flat tire” in the “6. In case of emergency” section.

TIRE PRESSURE

Maximum inflation pressure

Do not exceed the maximum inflation pressures shown on the side wall of the tire.

Tire inflation pressure

Check the tire pressure (including spare) at least once a month and always prior to long distance trips. Incorrect tire pressure may adversely affect tire life and vehicle handling. Tire pressure should be checked when tires are COLD. Tires are considered COLD after the vehicle has been

parked for 3 or more hours, or driven less than 1 mile (1.6 km) at moderate speeds. COLD tire pressures are shown on the tire placard affixed to the center pillar.

Low tire pressure warning system (if so equipped)

The low tire pressure warning system displays the tire pressure of all tires (except the spare tire) on the display screen by sending a signal from a sensor that is installed in each wheel. For more details, refer to "Low tire pressure warning light" in the "2. Instruments and controls" section, "Low tire pressure warning system" in the "5. Starting and driving" section, and "Flat tire" in the "6. In case of emergency" section. If the tire pressure displayed on the display screen is lower than the COLD tire pressure shown on the tire placard, check the pressure of all four tires and adjust them to the COLD tire pressure as indicated above. The low tire pressure warning system will activate only when the vehicle is driven at speeds above 20 MPH (32 km/h).

WARNING

- **Improperly inflated tires can fail suddenly and cause an accident.**
- **The vehicle capacity weight is indicated on the tire placard. Do not load your vehicle beyond this capacity. Overloading your vehicle may result in reduced tire life, unsafe operating conditions due to premature tire failure, or unfavorable handling characteristics and could also lead to a serious accident. Loading beyond the specified capacity may also result in failure of other vehicle components.**
- **Before taking a long trip, or whenever you have loaded your vehicle heavily, use a tire pressure gauge to ensure that the tire pressure is at the specified level.**
- **Do not drive your vehicle over 85 MPH (140 km/h) unless it is equipped with high speed capability tires. Driving faster than 85 MPH (140 km/h) may result in tire failure, loss of control and possible injury.**
- **For additional information regarding tires, refer to "Important Tire Safety Information" (US) or "Tire Safety Information" (Canada) in the Warranty Information booklet.**

TYPES OF TIRES

CAUTION

- **When changing or replacing tires, be sure all four tires are of the same type (for example, summer, all season or snow) and construction. Your NISSAN dealer may be able to help you with information about tire type, size, speed rating and availability. Replacement tires may have a lower speed rating than the factory equipped tires, and may not match the potential maximum vehicle speed. Never exceed the maximum speed rating of the tire.**
- **For additional information regarding tires, refer to "Important Tire Safety Information" (US) or "Tire Safety Information" (Canada) in the Warranty Information booklet.**

All season tires

NISSAN specifies all season tires on some models to provide good performance for use all year around, including snowy and icy road conditions. All season tires are identified by ALL SEASON and/or M&S (Mud and Snow) on the tire sidewall. Snow tires have better snow traction than all season tires and may be more appropriate in some areas.

Summer tires

NISSAN specifies summer tires on some models to provide superior performance on dry roads. Summer tire performance in snow and ice will be substantially reduced. Summer tires do not have the tire traction rating M&S (Mud and Snow) on the tire sidewall.

If you operate your vehicle in snowy or icy conditions, NISSAN recommends the use of snow or all season tires on all four wheels.

Snow tires

If snow tires are needed, it is necessary to select tires equivalent in size and load rating to the original equipment tires. If you do not, it can adversely affect the safety and handling of your vehicle.

Generally, snow tires will have lower speed ratings than factory equipped tires and may not match the potential maximum vehicle speed. Never exceed the maximum speed rating of the tire.

If you operate your vehicle in snowy or icy conditions, NISSAN recommends the use of snow or all season tires on all four wheels.

For additional traction on icy roads, studded tires may be used. However, some provinces and states prohibit their use. Check local, state and provincial laws before installing studded tires. Skid and traction capabilities of studded snow tires, on wet or dry surfaces, may be poorer than that of non-studded snow tires.

All wheel drive models

CAUTION

Always use tires of the same size, brand, construction (bias, bias-belted or radial), and tread pattern on all four wheels. Failure to do so may result in a circumference difference between tires on the front and rear axles which will cause excessive tire wear and may damage the transmission, transfer case and differential gears.

If excessive tire wear is found, it is recommended that all four tires be replaced with tires of the same size, brand, construction and tread pattern. The tire pressure and wheel alignment should also be checked and corrected as necessary. Contact your NISSAN dealer.

Tire chains must be installed only on the front wheels and not on the rear wheels.

Do not drive with tire chains on paved roads which are clear of snow. Driving with chains in such conditions can cause damage to the various mechanisms of the vehicle due to some overstress.

TIRE CHAINS

Use of tire chains may be prohibited according to location. Check the local laws before installing tire chains. When installing tire chains, make sure they are of proper size for the tires on your vehicle and are installed according to the chain manufacturer's suggestions. **Use only SAE class S chains.** Class "S" chains are used on vehicles with restricted tire to vehicle clearance. Vehicles that can use Class "S" chains are designed to meet the SAE standard minimum clearances between the tire and the closest vehicle suspension or body component required to accommodate the use of a winter traction device (tire chains or cables). The minimum clearances are determined using the factory

equipped tire size. Other types may damage your vehicle. Use chain tensioners when recommended by the tire chain manufacturer to ensure a tight fit. Loose end links of the tire chain must be secured or removed to prevent the possibility of whipping action damage to the fenders or undercarriage. If possible, avoid fully loading your vehicle when using tire chains. In addition, drive at a reduced speed. Otherwise, your vehicle may be damaged and/or vehicle handling and performance may be adversely affected.

- **Never install tire chains on a T-type spare tire.**
- **Do not use the chains on dry roads.**

Tire chains must be installed only on the front wheels and not on the rear wheels.

Do not drive with tire chains on paved roads which are clear of snow. Driving with chains in such conditions can cause damage to the various mechanisms of the vehicle due to some overstress.

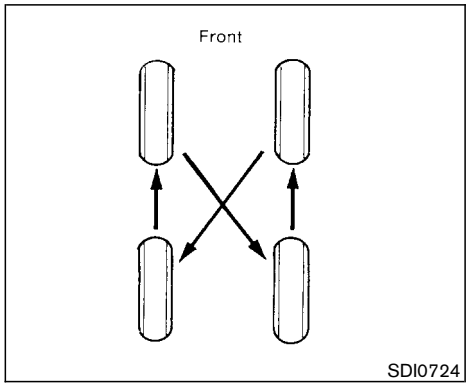

CHANGING WHEELS AND TIRES

Tire rotation

NISSAN recommends that tires be rotated every 7,500 miles (12,000 km).

Wheel nut tightening torque:
80 ft-lb (108 N·m)

See “Flat tire” in the “6. In case of emergency” section for tire replacing procedures.

WARNING

- **After rotating the tires, adjust the tire pressure.**
- **Retighten the wheel nuts when the vehicle has been driven for 600 miles (1,000 km) (also in cases of a flat tire, etc.).**
- **Do not include the T-type spare tire or any other small size spare tire in the tire rotation.**
- **For additional information regarding tires, refer to “Important Tire Safety Information” (US) or “Tire Safety Information” (Canada) in the Warranty Information booklet.**

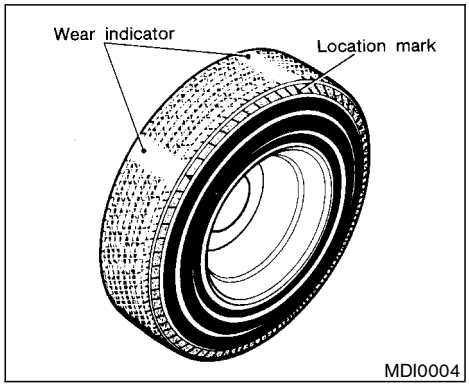

Tire wear and damage

WARNING

- **Tires should be periodically inspected for wear, cracking, bulging, or objects caught in the tread. If excessive wear, cracks, bulging, or deep cuts are found, the tire should be replaced.**
- **The original tires have a built-in tread wear indicator. When the wear indicator is visible, the tire should be replaced.**
- **Improper service for a spare tire may result in serious personal injury. If it is necessary to repair the spare tire, contact your NISSAN dealer.**
- **For additional information regarding tires, refer to "Important Tire Safety Information" (US) or "Tire Safety Information" (Canada) in the Warranty Information booklet.**

Replacing wheels and tires

When replacing a tire, use the same size, speed rating and load carrying capacity as originally equipped. See "Specifications" in the "9. Technical and consumer information" section for recommended types and sizes of tires and wheels.

WARNING

- **The use of tires other than those recommended or the mixed use of tires of different brands, construction (bias, bias-belted or radial), or tread patterns can adversely affect the ride, braking, handling, ground clearance, body-to-tire clearance, tire chain clearance, speedometer calibration, headlight aim and bumper height. Some of these effects may lead to accidents and could result in serious personal injury.**
- **If the wheels are changed for any reason, always replace with wheels which have the same offset dimension. Wheels of a different offset could cause early tire wear, possibly degraded vehicle handling characteristics and/or interference with the brake discs. Such interference can lead to decreased braking efficiency and/or early brake pad wear.**
- **When a spare tire is mounted or a wheel is replaced, the pressure of that tire will not be indicated and not be monitored by the low tire pressure warning system. Contact your NISSAN dealer as soon as possible**

for tire replacement and/or system resetting. (For models with the low tire pressure warning system)

- **Do not install a deformed wheel or tire even if it has been repaired. Such wheels or tires could have structural damage and could fail without warning.**
- **The use of retread tire is not recommended.**
- **For additional information regarding tires, refer to "Important Tire Safety Information" (US) or "Tire Safety Information" (Canada) in the Warranty Information booklet.**

Wheel balance

Unbalanced wheels may affect vehicle handling and tire life. Even with regular use, wheels can get out of balance. Therefore, they should be balanced as required.

Wheel balance service should be performed with the wheels off the vehicle. Spin balancing the front wheels on the vehicle could lead to transmission damage.

For additional information regarding tires, refer to "Important Tire Safety Information" (US) or "Tire Safety Information" (Canada) in the Warranty Information booklet.

Care of wheels

- Wash the wheels when washing the vehicle to maintain their appearance.
- Clean the inner side of the wheels when the wheel is changed or the underside of the vehicle is washed.
- Do not use abrasive cleaners when washing the wheels.
- Inspect wheel rims regularly for dents or corrosion. Such damage may cause loss of pressure or poor seal at the tire bead.
- NISSAN recommends that the road wheels be waxed to protect against road salt in areas where it is used during winter.

Spare tire (T-type spare tire)

Observe the following precautions if the T-type spare tire must be used, otherwise your vehicle could be damaged or involved in an accident.

CAUTION

- **The T-type spare tire should be used only for emergency. It should be replaced by the standard tire at the first opportunity.**
- **Drive carefully while the T-type spare tire is installed.**

  Avoid sharp turns and abrupt braking while driving.
- **Periodically check the T-type spare tire inflation pressure, and always keep it at 60 psi (420 kPa, 4.2 bar).**
- **Always keep the pressure of the full size spare tire (if so equipped) at the recommended pressure for standard tires, as indicated on the tire placard. For tire placard location, see "Tire placard" in the "9. Technical and consumer information".**
- **Do not drive your vehicle at speeds faster than 50 MPH (80 km/h).**
- **Do not use tire chains on a T-type**

spare tire. Tire chains will not fit properly on the T-type spare tire and may cause damage to the vehicle.

- When driving on roads covered with snow or ice, the T-type spare tire should be used on the rear wheel and the original tire used on the front wheels (drive wheels). Use tire chains only on the front two original tires.
- Tire tread of the T-type spare tire will wear at a faster rate than the original tire. Replace the T-type spare tire as soon as the tread wear indicators appear.
- Because the T-type spare tire is smaller than the original tire, ground clearance is reduced. To avoid damage to the vehicle do not drive over obstacles. Also do not drive the vehicle through an automatic car wash since it may get caught.
- Do not use the T-type spare tire on other vehicles.
- Do not use more than one T-type spare tire at the same time.
- Do not tow a trailer while the T-type spare tire is installed.

MEMO

MEMO

MEMO

9 Technical and consumer information

Capacities and recommended fuel/lubricants 9-2
Fuel recommendation 9-3
Engine oil and oil filter recommendation 9-5
Recommended SAE viscosity number 9-6
Air conditioning system refrigerant and lubricant recommendations 9-6
Specifications 9-7
Engine 9-7
Wheels and tires 9-9
Dimensions and weights 9-9
When traveling or registering your vehicle in another country 9-10
Vehicle identification 9-10
Vehicle identification number (VIN) plate 9-10
Vehicle identification number (Chassis number) 9-10
Engine serial number 9-11
F.M.V.S.S. certification label 9-11
Emission control information label 9-11
Tire placard 9-12
Air conditioner specification label 9-12
Installing front license plate 9-13
Vehicle loading information 9-14
Terms 9-14
Determining vehicle load capacity 9-14
Loading tips 9-15
Payload weight capacity 9-15
Measurement of weights 9-15
Towing a trailer 9-16
Maximum load limits 9-16
Towing load/specification chart 9-18
Towing safety 9-18
Uniform tire quality grading 9-21
Emission control system warranty 9-22
Reporting safety defects (US only) 9-22
Readiness for inspection/maintenance (I/M) test (US only) 9-22
Owner's Manual/Service Manual order information 9-24
In the event of a collision 9-24

CAPACITIES AND RECOMMENDED FUEL/LUBRICANTS

The following are approximate capacities. The actual refill capacities may be a little different. When refilling, follow the procedure instructed in the "8. Maintenance and do-it-yourself" section to determine the proper refill capacity.

	Capacity (Approximate)			Recommended specifications
	US measure	Imp measure	Liter	
Fuel	21-5/8 gal	18 gal	82	Unleaded gasoline with an octane rating of at least 87 AKI (RON 91)*1
Engine oil*6 Drain and refill				
With oil filter change	4-1/4 qt	3-1/2 qt	4.0	• API Certification Mark*2, *3 • API grade SG/SH, Energy Conserving I & II or API grade SJ or SL, Energy Conserving*2, *3 • ILSAC grade GF-I, GF-II & GF-III*2, *3
Without oil filter change	3-7/8 qt	3-1/4 qt	3.7	
Cooling system				
With reservoir	9-3/4 qt	8-1/8 qt	9.2	Genuine NISSAN anti-freeze coolant or equivalent
Reservoir	7/8 qt	3/5 qt	0.8	
Differential gear oil	—	—	—	API GL-5, Viscosity SAE 80W-90*4
CVT fluid	—	—	—	Genuine Nissan CVT Fluid NS-2*5
Transfer fluid	—	—	—	API GL-5, Viscosity SAE 80W-90
Power steering fluid	Refill to the proper oil level according to the instructions in the "8. Maintenance and do-it-yourself" section.			Genuine Nissan PSF or equivalent*7
Brake fluid				Genuine Nissan Brake Fluid*8 or equivalent DOT 3 (US FMVSS No. 116)
Multi-purpose grease	—	—	—	NLGI No. 2 (Lithium soap base)
Air conditioning system refrigerant	—	—	—	HFC-134a (R-134a)*9
Air conditioning system lubricants	—	—	—	Nissan A/C System Oil Type S or exact equivalent

*1: For additional information, see later in this paragraph for fuel recommendation.
*2: For additional information, see later in this paragraph for engine oil and oil filter recommendation.
*3: For additional information, see later in this paragraph for recommended SAE viscosity number.
*4: For hot climates, viscosity SAE 90 is suitable for ambient temperatures above 0°C (32°F).
*5: **Use only Genuine Nissan CVT Fluid NS-2. Using transmission fluid other than Genuine Nissan CVT Fluid NS-2 will damage the CVT transmission, which is not covered by the Nissan new vehicle limited warranty.**
*6: For additional information, see "Engine oil" in the "8. Maintenance and do-it-yourself" section for changing engine oil.
*7: For Canada, Nissan Automatic Transmission fluid (ATF), DEXRON™III/MERCON™ or equivalent ATF may also be used.
*8: Available in mainland US through your NISSAN dealer.
*9: For additional information, see "Vehicle identification" in this section for air conditioner specification label.

FUEL RECOMMENDATION

Use unleaded regular gasoline with an octane rating of at least 87 AKI (Anti-Knock Index) number (Research octane number 91).

For improved vehicle performance, NISSAN recommends the use of unleaded premium gasoline with an octane rating of at least 91 AKI number (Research octane number 96).

CAUTION

Using a fuel other than that specified could adversely affect the emission control devices and systems, and could also affect the warranty coverage.

Under no circumstances should a leaded gasoline be used, since this will damage the three-way catalyst.

Reformulated gasoline

Some fuel suppliers are now producing reformulated gasolines. These gasolines are specially designed to reduce vehicle emissions. NISSAN supports efforts towards cleaner air and suggests that you use reformulated gasoline when available.

Gasoline containing oxygenates

Some fuel suppliers sell gasoline containing oxygenates such as ethanol, MTBE and methanol with or without advertising their presence. NISSAN does not recommend the use of fuels of which the oxygenate content and the fuel compatibility for your NISSAN cannot be readily determined. If in doubt, ask your service station manager.

If you use oxygenate-blend gasoline, please take the following precautions as the usage of such fuels may cause vehicle performance problems and/or fuel system damage.

- **The fuel should be unleaded and have an octane rating no lower than that recommended for unleaded gasoline.**
- **If an oxygenate-blend, excepting a methanol blend, is used, it should contain no more than 10% oxygenate. (MTBE may, however, be added up to 15%.)**
- **If a methanol blend is used, it should contain no more than 5% methanol (methyl alcohol, wood alcohol). It should also contain a suitable amount of appropriate cosolvents and corrosion inhibitors. If not properly formulated with appropriate cosolvents and corrosion inhibitors, such methanol blends may cause fuel system damage and/or vehicle performance problems. At this time, sufficient data is not available to ensure that all methanol blends are suitable for use in NISSAN vehicles.**

If any undesirable driveability problems such as engine stalling and hard hot starting are experienced after using oxygenate-blend fuels, immediately change to a non-oxygenate fuel or a fuel with a low blend of MTBE.

Take care not to spill gasoline during refueling. Gasoline containing oxygenates can cause paint damage.

Aftermarket fuel additives

NISSAN does not recommend the use of any fuel additives (for example, fuel injector cleaner, octane booster, intake valve deposit removers, etc.) which are sold commercially. Many of these additives intended for gum, varnish or deposit removal may contain active solvent or similar ingredients that can be harmful to the fuel system and engine.

Octane rating tips

In most parts of North America, you should use

unleaded gasoline with an octane rating of at least 87 or 91 AKI (Anti-Knock Index) number. However, you may use unleaded gasoline with an octane rating as low as 85 AKI number in these high altitude areas [over 4,000 ft (1,219 m)] such as: Colorado, Montana, New Mexico, Utah, Wyoming, northeastern Nevada, southern Idaho, western South Dakota, western Nebraska, and that part of Texas which is directly south of New Mexico.

Using unleaded gasoline with an octane rating lower than stated above can cause persistent, heavy spark knock. (Spark knock is a metallic rapping noise.) If severe, this can lead to engine damage. If you detect a persistent heavy spark knock even when using gasoline of the stated octane rating, or if you hear steady spark knock while holding a steady speed on level roads, have your dealer correct the condition. Failure to correct the condition is misuse of the vehicle, for which NISSAN is not responsible.

Incorrect ignition timing will result in knocking, after-run or overheating. This in turn may cause excessive fuel consumption or damage to the engine. If any of the above symptoms are encountered, have your vehicle checked at a NISSAN dealer or other competent service facility.

However, now and then you may notice light spark knock for a short time while accelerating or driving up hills. This is no cause for concern, because you get the greatest fuel benefit when there is light spark knock for a short time under heavy engine load.

API certification mark

API service symbol

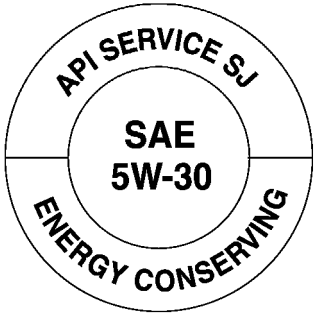

STI0293

ENGINE OIL AND OIL FILTER RECOMMENDATION

Selecting the correct oil

It is essential to choose the correct quality, and viscosity oil to ensure satisfactory engine life and performance. NISSAN recommends the use of a low friction oil (energy conserving oil) in order to improve fuel economy and conserve energy. Oils which do not have the specified quality label should not be used as they could cause engine damage.

Only those engine oils with the American Petroleum Institute (API) certification mark on the front of the container should be used. This type of oil supersedes the existing API SG, SH, or SJ and Energy Conserving I & II categories.

If you cannot find engine oil with the API certification mark, use an API grade SG/SH, Energy Conserving I & II or API grade SJ or SL, Energy conserving oil. An oil with a single designation SG or SH, or in combination with other categories (for example, SG/CC or SG/CD) may also be used if one with the API certification mark cannot be found. An ILSAC grade GF-I, GF-II or GF-III oil can also be used.

NISSAN recommends mineral based oils. These oils must however, meet the API quality and SAE viscosity ratings specified for your vehicle.

Oil additives

NISSAN does not recommend the use of oil additives. The use of an oil additive is not necessary when the proper oil type is used and maintenance intervals are followed.

Oil which may contain foreign matter or has been previously used should not be used.

Oil viscosity

The engine oil viscosity or thickness changes with temperature. Because of this, it is important that the engine oil viscosity be selected based on the temperatures at which the vehicle will be operated before the next oil change. The recommended SAE viscosity number chart shows the recommended oil viscosities for the expected ambient temperatures. Choosing an oil viscosity other than that recommended could cause serious engine damage.

Selecting the correct oil filter

Your new vehicle is equipped with a high-quality genuine NISSAN oil filter. When replacing, use the genuine oil filter or its equivalent for the reason described in change intervals.

Change intervals

The oil and oil filter change intervals for your engine are based on the use of the specified quality oils and filters. Oil and filter other than the specified quality, or oil and filter change intervals longer than recommended could reduce engine life. Damage to engines caused by improper maintenance or use of incorrect oil and filter quality and/or viscosity is not covered by the new NISSAN vehicle warranties.

Your engine was filled with a high quality engine oil when it was built. You do not have to change the oil before the first recommended change interval. Oil and filter change intervals depend upon how you use your vehicle. Operation under the following conditions may require more frequent oil and filter changes.

- repeated short distance driving at cold outside temperatures,
- driving in dusty conditions,
- extensive idling,
- towing a trailer.

RECOMMENDED SAE VISCOSITY NUMBER

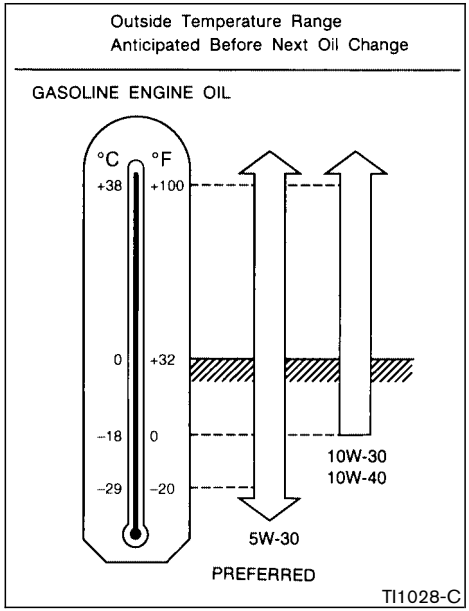

SAE 5W-30 viscosity oil is preferred for all ambient temperatures. SAE 10W-30, 10W-40 viscosity oil may be used if the ambient temperature is above 0°F (–18°C).

AIR CONDITIONING SYSTEM REFRIGERANT AND LUBRICANT RECOMMENDATIONS

The air conditioning system in this NISSAN vehicle must be charged with the refrigerant HFC-134a (R-134a) and the lubricant, Nissan A/C System Oil Type S or the exact equivalents.

CAUTION

The use of any other refrigerant or lubricant will cause severe damage to the air conditioning system and will require the replacement of all air conditioner system components.

The refrigerant HFC-134a (R-134a) in your NISSAN vehicle will not harm the earth's ozone layer. Although this refrigerant does not affect the earth's atmosphere, certain governmental regulations require the recovery and recycling of any refrigerant during automotive air conditioning system service. Your NISSAN dealer has the trained technicians and equipment needed to recover and recycle your air conditioning system refrigerant.

Contact your NISSAN dealer when servicing your air conditioning system.

SPECIFICATIONS

ENGINE

Model		VQ35DE
Type		Gasoline, 4-cycle
Cylinder arrangement		6-cylinder, V-slanted at 60°
Bore x Stroke	in (mm)	3.760 x 3.205 (95.5 x 81.4)
Displacement	cu in (cm^3)	213.45 (3,498)
Firing order		1-2-3-4-5-6*
Idle speed	rpm	See the emission control label on the underside of the hood.
Ignition timing (B.T.D.C.)	degree/rpm	
CO percentage at idle speed	[No air] %	
Spark plug	Standard	PLFR5A-11
	Service option	PLFR4A-11, PLFR6A-11
Spark plug gap (Normal)	in (mm)	0.043 (1.1)
Camshaft operation		Timing chain

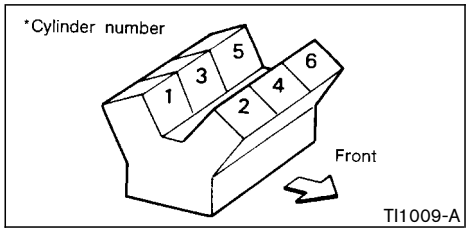

The spark ignition system of this vehicle meets all requirements of the Canadian Interference-Causing Equipment Regulations.

WHEELS AND TIRES

Road wheel	Type	Size	Offset in (mm)
	Aluminum	18 x 7-1/2JJ	1.38 (35)
Tire	Conventional	P235/65R18 104T	
	Spare	T165/90D18 107M Conventional*	

*: For Canada

DIMENSIONS AND WEIGHTS

Overall length	in (mm)	187.6 (4,767)
Overall width	in (mm)	74.0 (1,880)
Overall height without roof rack rail	in (mm)	66.5 (1,689)
Overall height with roof rack rail	in (mm)	67.3 (1,709)
Front tread	in (mm)	64.2 (1,630)
Rear tread	in (mm)	64.0 (1,625)
Wheelbase	in (mm)	111.2 (2,825)
Gross vehicle weight rating	lb (kg)	See the F.M.V.S.S. certification label on the driver's side lock pillar.
Gross axle weight rating		
Front	lb (kg)	
Rear	lb (kg)	

WHEN TRAVELING OR REGISTERING YOUR VEHICLE IN ANOTHER COUNTRY

When planning to travel in another country, you should first find out if the fuel available is suitable for your vehicle's engine.

Using fuel with too low an octane rating may cause engine damage. All gasoline vehicles must be operated with unleaded engine gasoline. Therefore, avoid taking your vehicle to areas where appropriate fuel is not available.

When transferring the registration of your vehicle to another country, state, province or district, it may be necessary to modify the vehicle to meet local laws and regulations.

The laws and regulations for motor vehicle emission control and safety standards vary according to the country, state, province or district; therefore, vehicle specifications may differ.

When any vehicle is to be taken into another country, state, province or district and registered, its modifications, transportation, and registration are the responsibility of the user. NISSAN is not responsible for any inconvenience that may result.

VEHICLE IDENTIFICATION

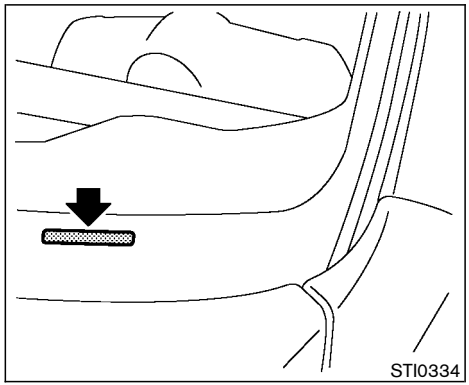

VEHICLE IDENTIFICATION NUMBER (VIN) PLATE

The vehicle identification number plate is attached as shown. This number is the identification for your vehicle and is used in the vehicle registration.

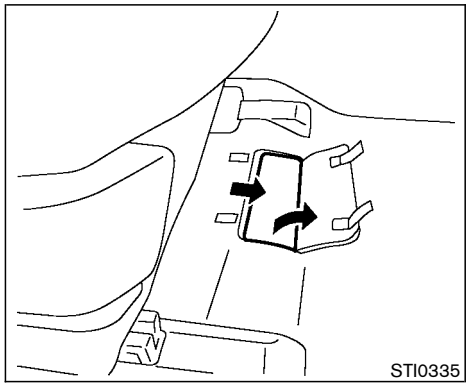

VEHICLE IDENTIFICATION NUMBER (Chassis number)

The number is stamped under the passenger's seat as shown.

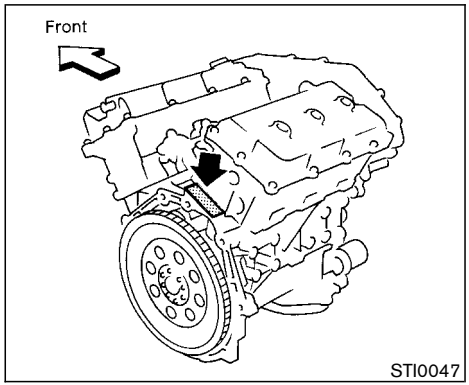

ENGINE SERIAL NUMBER

The number is stamped on the engine as shown.

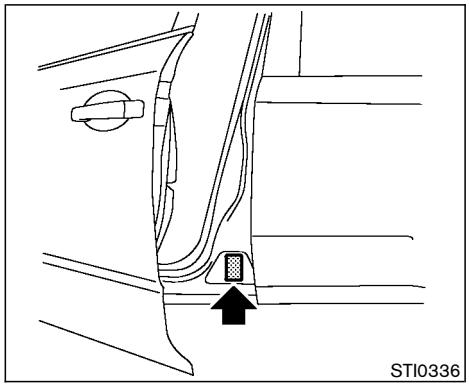

F.M.V.S.S. CERTIFICATION LABEL

The Federal Motor Vehicle Safety Standards (F.M.V.S.S.) certification label is affixed as shown. This label contains valuable vehicle information, such as: Gross Vehicle Weight Ratings (GVWR), Gross Axle Weight Rating (GAWR), month and year of manufacture, Vehicle Identification Number, (VIN), etc. Review it carefully.

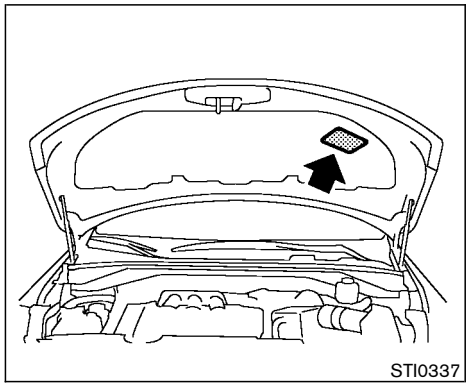

EMISSION CONTROL INFORMATION LABEL

The emission control information label is attached as shown.

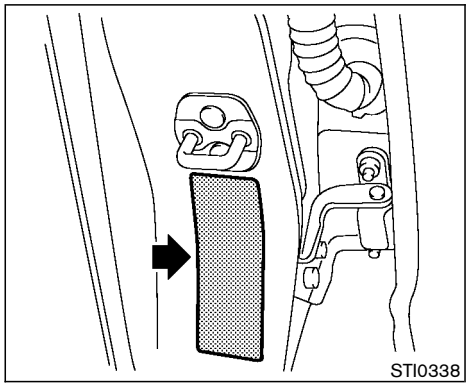

TIRE PLACARD

The cold tire pressure is shown on the tire placard affixed to the driver's door center pillar.

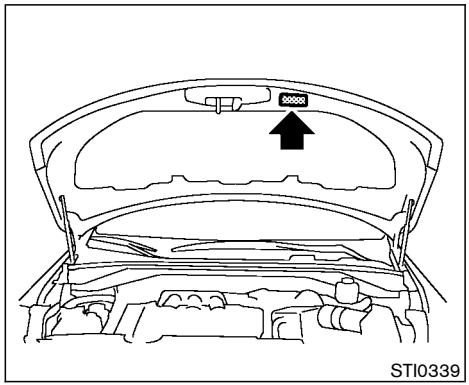

AIR CONDITIONER SPECIFICATION LABEL

The air conditioner specification label is affixed inside of the hood as shown.

INSTALLING FRONT LICENSE PLATE

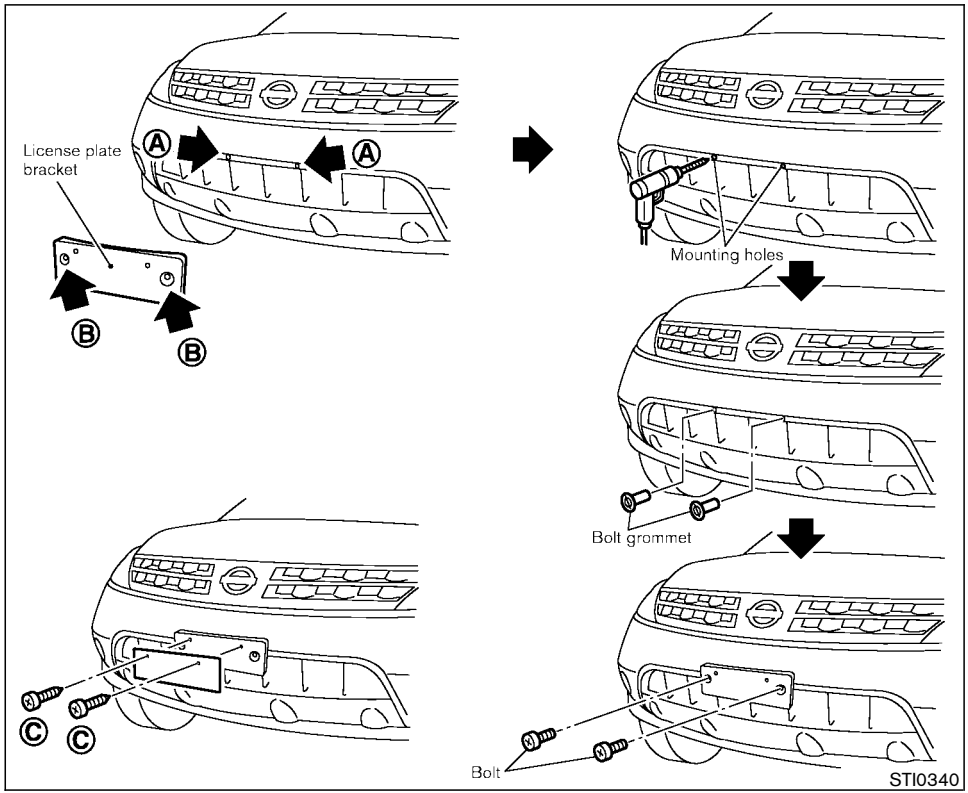

Use the following steps to mount the license plate:

Before mounting the license plate, confirm that the following parts are enclosed in the vinyl bag.

- License plate bracket
- Screw x 2
- Bolt grommet x 2
- Bolt x 2

1. Temporarily place the license plate bracket while aligning points Ⓐ of the front bumper fascia with holes Ⓑ in the license plate bracket.
2. Remove the license plate bracket.
3. Carefully drill two pilot holes Ⓐ using a 0.39 in (10 mm) drill bit at the marked locations. **(Be sure that the drill only goes through the fascia, or damage to the nut may occur.)**
4. Insert grommets into the hole on the fascia.
5. Install the license plate bracket with bolts.
6. Install the license plate with screws Ⓒ.

VEHICLE LOADING INFORMATION

WARNING

- **It is extremely dangerous to ride in a cargo area inside of a vehicle. In a collision, people riding in these areas are more likely to be seriously injured or killed**
- **Do not allow people to ride in any area of your vehicle that is not equipped with seats and seat belts.**
- **Be sure everyone in your vehicle is in a seat and using a seat belt properly.**

TERMS

It is important to familiarize yourself with the following terms before loading your vehicle:

- Curb Weight (actual weight of your vehicle) - vehicle weight including: standard and optional equipment, fluids, emergency tools, and spare tire assembly. This weight **does not** include passengers and cargo.
- GVW (Gross Vehicle Weight) - curb weight plus the combined weight of passengers and cargo.
- GVWR (Gross Vehicle Weight Rating) - maximum total weight (load) limit specified for the vehicle.
- GAWR (Gross Axle Weight Rating) - maximum weight (load) limit specified for the front or rear axle.

DETERMINING VEHICLE LOAD CAPACITY

The load capacity of this vehicle is determined by weight, not by available cargo space. For example, a luggage rack, bike carrier, cartop carrier or similar equipment does not increase load carrying capacity of your vehicle.

To determine vehicle load capacity:

Vehicle weight can be determined by using a commercial-grade scale, found at places such as a truck stop, gravel quarry, grain elevator, or a scrap metal recycling facility.

1. Determine the curb weight of your vehicle.
2. Compare the curb weight amount to the GVWR specified for your vehicle to determine how much more weight your vehicle can carry.
3. After loading (cargo and passengers), reweigh your vehicle to determine if either GVWR or GAWR for your vehicle is exceeded. If GVWR is exceeded, remove cargo as necessary. If either the front or rear GAWR is exceeded, shift the load or remove cargo as necessary.

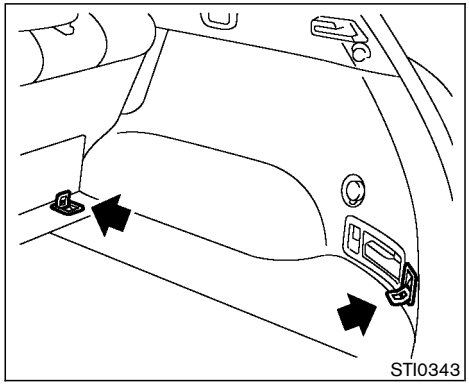

LOADING TIPS

There are tie down hooks located in the cargo area. The tie down hooks can be used to secure cargo with ropes or other types of straps.

- The GVW must not exceed GVWR or GAWR as specified on the F.M.V.S.S. certification label.
- Do not load the front and rear axle to the GAWR. Doing so will exceed the GVWR.

WARNING

- **Properly secure all cargo to help prevent it from sliding or shifting. Do not place cargo higher than the seatbacks. In a sudden stop or collision, unsecured cargo could cause personal injury.**
- **Do not load your vehicle any heavier than the GVWR or the maximum front and rear GAWRs. If you do, parts on your vehicle can break, or it can change the way your vehicle handles. This could result in loss of control and cause personal injury.**
- **Overloading can shorten the life of your vehicle. Failures caused by overloading are not covered by your warranty.**

PAYLOAD WEIGHT CAPACITY

The payload weight capacity is the maximum total weight of passengers, optional equipment (air conditioning, trailer hitch, etc.) and cargo that your vehicle is designed to carry.

Before driving a loaded vehicle, confirm that you do not exceed the Gross Vehicle Weight Rating (GVWR) or the Gross Axle Weight Rating (GAWR) for your vehicle. See “Vehicle loading information” earlier in this section for details.

Also check tires for proper inflation pressures. See the tire placard affixed to the glove box lid.

Payload Weight Capacity Unit: lb (kg)		
VQ35DE		
	2WD	AWD
US	1,050 (475)	1,090 (495)
Canada	—	1,070 (485)

MEASUREMENT OF WEIGHTS

Secure loose items to prevent weight shifts that could affect the balance of your vehicle. When the vehicle is loaded, drive to a scale and weight the front and the rear wheels separately to determine axle loads. Individual axle loads should not exceed either of the gross axle weight ratings (GAWR). The total of the axle loads should not exceed the gross vehicle weight rating (GVWR). These ratings are given on the vehicle certification label that is located on the driver’s door lock pillar. If weight ratings are exceeded, move or remove items to bring all weights below the ratings.

TOWING A TRAILER

CAUTION

Overloading can shorten the life of your vehicle. Failures caused by overloading are not covered by your warranty.

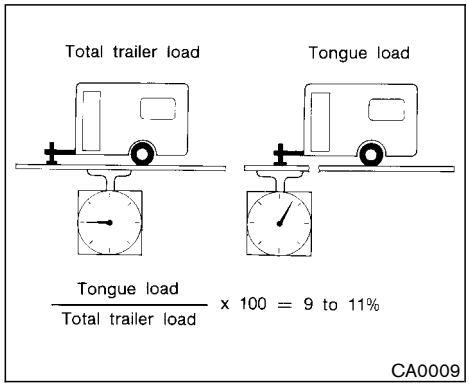

Your new vehicle was designed to be used primarily to carry passengers and cargo. Remember that towing a trailer will place additional loads on your vehicle's engine, drive train, steering, braking and other systems.

A **Nissan Trailer Towing Guide (US only)** is available from a NISSAN dealer. This guide includes information on trailer towing ability and the special equipment required for proper towing.

WARNING

Vehicle damage and/or personal injury resulting from improper towing procedures is not covered by NISSAN warranties. A NISSAN Trailer Towing Guide (U.S. only) containing information on trailer towing ability and the special equipment required may be obtained from a NISSAN dealer.

MAXIMUM LOAD LIMITS

Maximum trailer loads

Never allow the total trailer load to exceed the value specified in the following Towing Load/Specification Chart. The total trailer load equals trailer weight plus its cargo weight.

- When towing a trailer load of 1,000 lbs. (454 kg) or more, trailers with a brake system MUST be used.

The maximum GCWR (Gross Combined Weight Rating) should not exceed the value specified in the following Towing Load/Specification Chart.

The GCWR equals the combined weight of the towing vehicle (including passengers and cargo)

plus the total trailer load. Towing loads greater than these or using improper towing equipment could adversely affect vehicle handling, braking and performance.

The ability of your vehicle to tow a trailer is not only related to the maximum trailer loads, but also the places you plan to tow. Tow weights appropriate for level highway driving may have to be reduced on very steep grades or in low traction situations (for example, on slippery boat ramps).

Temperature conditions also can affect towing. For example, towing a heavy trailer in high outside temperatures on graded roads can affect engine performance and cause overheating. The transmission high fluid temperature protection mode, which helps reduce the chance of transmission damage, could activate and automatically decrease engine power. Vehicle speed may decrease to 40 to 50 MPH (65 to 80 km/h) under high load. Plan your trip carefully to account for trailer and vehicle load, weather, and road conditions.

WARNING

Overheating can result in reduced engine power and lower vehicle speed. Also, when the high temperature mode operates, vehicle speed may be gradually reduced. On highways, the reduced speed may be lower than other traffic which could increase the chance of a collision. Be especially careful when driving. If necessary, pull to the side of the road at a safe place and allow the engine to cool or the transmission to return to normal operation.

Tongue load

Keep the tongue load between 9 to 11% of the total trailer load within the maximum tongue load limits shown in the following Towing Load/Specifications Chart. If the tongue load becomes excessive, rearrange cargo to allow for proper tongue load.

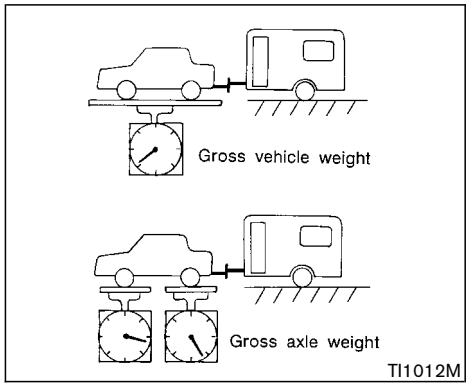

Maximum gross vehicle weight/ maximum gross axle weight

The gross vehicle weight of the towing vehicle must not exceed the gross vehicle weight rating (GVWR) shown on the F.M.V.S.S. certification label. The gross vehicle weight equals the combined weight of the unloaded vehicle, passengers, luggage, hitch, trailer tongue load and any other optional equipment. In addition, front or rear gross axle weight must not exceed the gross axle weight rating (GAWR) shown on the F.M.V.S.S. certification label.

TOWING LOAD/SPECIFICATION CHART

TOWING LOAD/SPECIFICATION CHART Unit: lb (kg)	
MODEL WEIGHT	VQ35DE CVT
MAXIMUM TRAILER WEIGHT*1	3,500 (1,588)
MAXIMUM TONGUE LOAD	350 (159)
GROSS COMBINED WEIGHT RATING	8,100 (3,674)
RECOMMENDED EQUIPMENT*2	Sway Control Device (SCD)

*1: All towing above 1,000 lb (454 kg) requires the use of trailer brakes. NISSAN recommends the use of a tandem axle trailer whenever towing above 3,000 lb (1,361 kg).

*2: A sway control device is recommended for all towing above 2,000 lb (907 kg). Sway control devices are not offered by NISSAN. See a professional trailer/hitch outlet for a properly designed sway control device for your trailer.

TOWING SAFETY

Trailer hitch

Check the towing capacity of your receiver type frame mounted hitch. Choose a proper hitch for your vehicle and trailer. A genuine NISSAN trailer hitch is available from your NISSAN dealer (US only). Make sure the trailer hitch is securely attached to the vehicle, to help avoid personal injury or property damage due to sway caused by crosswinds, rough road surfaces or passing trucks.

CAUTION

- **Special hitches which include frame reinforcements are required for towing above 2,000 lb (907 kg). Suitable Genuine NISSAN hitches for pickup truck and sport utility vehicles are available at a NISSAN dealer.**
- **Do not use axle-mounted hitches.**
- **Do not modify the vehicle exhaust system, brake system, etc. to install a trailer hitch.**

- **After the hitch is removed, seal the bolt holes to prevent exhaust fumes, water or dust from entering the passenger compartment.**
- **Regularly check all hitch mounting bolts are securely mounted.**
- **To reduce the possibility of additional damage if your vehicle is struck from the rear, where practical, remove the hitch and/or receiver when not in use.**
- **Never connect a trailer brake system directly to the vehicle brake system.**

Tire pressures

- When towing a trailer, inflate the vehicle tires to the recommended cold tire pressure indicated on the tire placard (located on the driver's door center pillar).
- Trailer tire condition, size, load rating and proper inflation pressure should be in accordance with the trailer and tire manufacturers' specifications.

Safety chain

Always use a suitable chain between your vehicle and the trailer. The chain should be crossed and should be attached to the hitch, not to the vehicle bumper or axle. Be sure to leave enough slack in the chain to permit turning corners.

Trailer lights

Trailer lights should comply with federal and/or local regulations. When wiring the vehicle for towing, connect the stop and tail light pickup into the vehicle electrical circuit at a point between the sensor and stop light or light switch.

Trailer brakes

If your trailer is equipped with a braking system, make sure it conforms to federal and/or local regulations and that it is properly installed.

WARNING

Never connect a trailer brake system directly to the vehicle brake system.

Pre-towing tips

- Be certain your vehicle maintains a level position when a loaded and/or unloaded trailer is hitched. Do not drive the vehicle if it has an abnormal nose-up or nose-down condition; check for improper tongue load, overload, worn suspension or other possible causes of either condition.
- Always secure items in the trailer to prevent load shifts while driving.
- Be certain your rear view mirrors conform to all federal, state or local regulations. If not, install any mirrors required for towing before driving the vehicle.

Trailer towing tips

In order to gain skill and an understanding of the vehicle's behavior, you should practice turning, stopping and backing up in an area which is free from traffic. Steering stability, and braking performance will be somewhat different than under normal driving conditions.

- Always secure items in the trailer to prevent load shift while driving.
- Avoid abrupt starts, acceleration or stops.
- Avoid sharp turns or lane changes.
- Always drive your vehicle at a moderate speed.
- Always block the wheels on both vehicle and

trailer when parking. Parking on a slope is not recommended; however, if you must do so, first block the wheels and apply the parking brake, and then move the selector lever into the P (Park) position. If you move the selector lever to the P (Park) position before blocking the wheels and applying the parking brake, transmission damage could occur.

- When going down a hill, shift into a lower gear and use the engine braking effect. When ascending a long grade, downshift the transmission to a lower gear and reduce speed to reduce chances of engine overloading and/or overheating.
- If the engine coolant rises to an extremely high temperature when the air conditioning system is on, turn off the air conditioner. Coolant heat can be additionally vented by opening the windows, switching the fan control to high and setting the temperature control to the HOT position.
- If the transmission fluid rises to an extremely high temperature, a high fluid temperature protection mode may operate. See page 5-13 for details. If necessary, pull to the side of the road at a safe place and let the transmission cool before continuing.
- Trailer towing requires more fuel than normal circumstances.
- Avoid towing a trailer for the first 500 miles (800 km).
- Have your vehicle serviced more often than at intervals specified in the recommended maintenance schedule.
- When making a turn, your trailer wheels will be closer to the inside of the turn than your vehicle wheels. To compensate for this, make a larger than normal turning radius during the turn.
- Crosswinds and rough roads will adversely affect vehicle/trailer handling, possibly causing vehicle sway. When being passed by larger vehicles, be prepared for possible changes in crosswinds that could affect vehicle handling. If swaying does occur, firmly grip the steering wheel, steer straight ahead, and immediately (but gradually) reduce vehicle speed. This combination will help stabilize the vehicle. Never increase speed.
- Be careful when passing other vehicles. Passing while towing a trailer requires considerably more distance than normal passing. Remember the length of the trailer must also pass the other vehicle before you can safely change lanes.
- Avoid holding the brake pedal down too long or too frequently. This could cause the brakes to overheat, resulting in reduced braking efficiency.

UNIFORM TIRE QUALITY GRADING

DOT (Department Of Transportation) Quality Grades: All passenger car tires must conform to federal safety requirements in addition to these grades.

Quality grades can be found where applicable on the tire sidewall between tread shoulder and maximum section width. For example:

Treadwear 200 Traction AA Temperature A

Treadwear

Treadwear grade is a comparative rating based on tire wear rate when tested under controlled conditions on specified government test courses. For example, a tire graded 150 would wear one and a half (1-1/2) times as well on the government course as a tire graded 100. However, relative tire performance depends on actual driving conditions, and may vary significantly from the norm due to variations in driving habits, service practices and differences in road characteristics and climate.

Traction AA, A, B and C

The traction grades, from highest to lowest, are AA, A, B, and C. Those grades represent the tire's ability to stop on wet pavement as measured under controlled conditions on specified government test surfaces of asphalt and concrete. A tire marked C may have poor traction performance.

WARNING

The traction grade assigned to your vehicle tires is based on straight-ahead braking traction tests, and does not include acceleration, cornering, hydroplaning, or peak traction characteristics.

Temperature A, B and C

Temperature grades are A (the highest), B, and C. They represent a tire's resistance to heat build-up, and its ability to dissipate heat when tested under controlled conditions on a specified indoor laboratory test wheel. Sustained high temperature can cause tire material to degenerate, reducing tire life. Excessive temperatures can lead to sudden tire failure. Grade C corresponds to a performance level which all passenger car tires must meet under the Federal Motor Vehicle Safety Standard No. 109. Grades A and B represent higher levels of performance on laboratory test wheels than the minimum required by law.

WARNING

The temperature grade for this tire is established for a tire that is properly inflated and not overloaded. Excessive speed, underinflation, or excessive loading, either separately or in combination, can cause heat buildup and possible tire failure.

EMISSION CONTROL SYSTEM WARRANTY

Your NISSAN is covered by the following emission warranties.

For US:

- Emission Defects Warranty
- Emissions Performance Warranty (See Warranty Information Booklet for details)

For Canada:

Emission Control System Warranty

Details of these warranties may be found with other vehicle warranties in your Warranty Information Booklet that comes with your NISSAN vehicle. If you did not receive a Warranty Information Booklet or it has become lost, you may obtain a replacement by writing to:

- Nissan North America, Inc.
  Consumer Affairs Department
  P.O. Box 191
  Gardena, CA. 90248-0191
- Nissan Canada Inc.
  5290 Orbitor Drive
  Mississauga, Ontario,
  L4W 4Z5

REPORTING SAFETY DEFECTS (US only)

If you believe that your vehicle has a defect which could cause a crash or could cause injury or death, you should immediately inform the National Highway Traffic Safety Administration (NHTSA) in addition to notifying NISSAN.

If NHTSA receives similar complaints, it may open an investigation, and if it finds that a safety defect exists in a group of vehicles, it may order a recall and remedy campaign. However, NHTSA cannot become involved in individual problems between you, your dealer, or NISSAN.

To contact NHTSA, you may call the Auto Safety Hotline toll-free at 1-888-327-4236. You may also write to: NHTSA, U.S. Department of Transportation, Washington, D.C. 20590. You can also obtain other information about motor vehicle safety from the Hotline.

You may notify NISSAN by contacting our Consumer Affairs Department, toll-free, at 1-800-662-6200.
In Hawaii call (808) 836-0888.

READINESS FOR INSPECTION/ MAINTENANCE (I/M) TEST (US only)

Due to legal requirements in some states/areas, your vehicle may be required to be in what is called the “ready condition” for an Inspection/Maintenance (I/M) test of the emission control system.

The vehicle is set to the “ready condition” when it is driven through certain driving patterns. Usually, the “ready condition” can be obtained by ordinary usage of the vehicle.

If a powertrain system component is repaired or the battery is disconnected, the vehicle may be reset to a not “ready condition”. Before taking the I/M test, drive the vehicle through the following pattern to set the vehicle to the ready condition. If you cannot or do not want to perform the driving pattern, a NISSAN dealer can conduct it for you.

WARNING

Always drive the vehicle in a safe and prudent manner according to traffic conditions, and obey all traffic laws.

1. Start the engine. Allow the engine to idle until the engine coolant temperature gauge needle points between the C and H (normal operating temperature).

2. Accelerate the vehicle to 55 MPH (88 km/h), then quickly release the accelerator pedal completely and keep it released for at least 6 seconds.
3. Quickly depress the accelerator pedal for a moment, then drive the vehicle at a speed of 53 to 60 MPH (86 to 96 km/h) for at least 5 minutes.
4. Stop the vehicle. Leave the engine running.
5. Accelerate the vehicle to 35 MPH (55 km/h) and maintain the speed for 20 seconds.
6. Repeat steps 4 and 5 at least 3 times.
7. Accelerate the vehicle to 55 MPH (88 km/h) and maintain the speed for at least 3 minutes.
8. Stop the vehicle. Place the transmission selector lever in the “P” or “N” position.
9. Turn the engine off.
10. Repeat steps 1 through 8 at least one more time.

If step 1 through 7 is interrupted, repeat the preceding step. Any safe driving mode is acceptable between steps. Do not stop the engine until step 7 is completed.

OWNER'S MANUAL/SERVICE MANUAL ORDER INFORMATION

Genuine Nissan Service Manuals

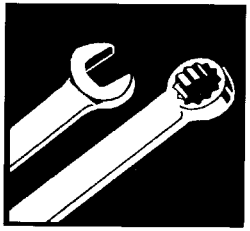

GET THE INSIDE STORY

A genuine NISSAN Service Manual is the best source of service and repair information for your vehicle. Filled with wiring diagrams, illustrations and step-by-step diagnostic and adjustment procedures, this manual is the same one used by the factory trained technicians working at authorized NISSAN dealerships. Also available are genuine NISSAN Owner's Manuals, and genuine NISSAN Service and Owner's Manuals for older NISSAN models.

In the USA:

For current pricing and availability of genuine **NISSAN Service Manuals** for the 2000 model year and later, contact:

Tweddle Litho Company
1-800-639-8841
www.nissan-techinfo.com

For current pricing and availability of genuine **NISSAN Service Manuals** for the 1999 model year and prior, see a NISSAN dealer, or contact:

DDS Distribution Services, Ltd.
20770 Westwood Dr.
Strongsville OH 44136
1-800-247-5321

For current pricing and availability of genuine **NISSAN Owner's Manuals** for the 2002 model year and prior, see a NISSAN dealer, or contact:

DDS Distribution Services, Ltd.
20770 Westwood Dr.
Strongsville OH 44136
1-800-247-5321

In Canada:

To purchase a copy of a genuine NISSAN Service Manual or Owner's Manual please contact your nearest NISSAN dealer. For the phone number and location of a NISSAN Dealer in your area call the NISSAN Satisfaction Center at 1-800-387-0122 and a bilingual NISSAN representative will assist you.

Also available are Genuine NISSAN Service and Owner's Manuals for older NISSAN models.

IN THE EVENT OF A COLLISION

Unfortunately, accidents do occur. In this unlikely event, there is some important information you should know. Many insurance companies routinely authorize the use of non-genuine collision parts in order to cut costs, among other reasons.

Insist on the use of Genuine Nissan Collision Parts!

If you want your vehicle to be restored using parts made to Nissan's original exacting specifications — if you want to help it to last and hold its resale value, the solution is simple. **Tell your insurance agent and your repair shop to only use Genuine Nissan Collision Parts.** Nissan does not warrant non-Nissan parts, nor does Nissan's warranty apply to damage caused by a non-genuine part.

Using Genuine Nissan Parts can help protect your personal safety, preserve your warranty protection and maintain the resale value of your vehicle. And if your vehicle was leased, using Genuine Nissan Parts may prevent or limit unnecessary excess wear and tear expenses at the end of your lease.

Nissan designs its hoods with crumple zones to minimize the risk that the hood will penetrate the windshield of your vehicle in an accident. Non-genuine (imitation) parts may not provide such built in safeguards. Also, non-genuine parts often show premature wear, rust and corrosion.

Why should you take a chance?

In over 40 states, the law says you must be advised if non-genuine parts are used to repair your vehicle. And some states have enacted laws that restrict insurance companies from authorizing the use of non-genuine collision parts during the new vehicle warranty. These laws help protect you, so you can take action to protect yourself.

It's your right!

If you should need further information visit us at: www.nissanusa.com.

MEMO

10 Index

A

ABS (Anti-lock brake system) 5-22
Aiming control, headlights 2-22
Air bag system
  Front (See supplemental front air bag system) 1-15
  Side and curtain (See supplemental side air bag and curtain side-impact air bag systems) 1-17
Air bag warning labels 1-20
Air bag warning light 1-20, 2-12
Air cleaner housing filter 8-16
Air conditioner
  Air conditioner operation 4-15
  Air conditioner service 4-15, 4-18
  Air conditioner specification label 9-12
  Air conditioning system refrigerant and lubricant recommendations 4-18, 9-6
  Heater and air conditioner (automatic) 4-15
Alcohol, drugs and driving 5-5
All wheel drive (AWD) 5-17
Anchor point locations
  Top tether strap 1-41
Antenna 4-31
Anti-lock Brake System (ABS) 5-22
Anti-lock brake warning light 2-9
Appearance care
  Exterior appearance care 7-2
  Interior appearance care 7-3
Armrest 1-9
Audible reminders 2-15
Audio operation precautions 4-20
Audio, steering switch for audio system 4-30
Audio system 4-19
Autochanger, Compact Disc (CD) 4-28
Autolight system 2-21
Automatic
  Anti-glare inside mirror 3-15
  Drive positioner 3-16
Automatic seat positioner, seat 3-16
Avoiding collision and rollover 5-4
AWD lock switch operations 5-18

B

Back door 3-9
Battery 8-14
  Battery saver system 2-22
Battery replacement, (See remote keyless entry system) 3-7
Before starting the engine 5-9
Belts (See drive belts) 8-15
Brake
  Anti-lock brake system (ABS) 5-22
  Brake booster 8-20
  Brake fluid 8-12
  Brake pedal 8-19
  Brake pedal check 8-20
  Brake system 5-21
  Parking brake check 5-14, 8-19
  Parking brake operation 5-14
  Warning light 2-10
Break-in schedule 5-16
Bulb check/instrument panel 2-9
Bulb replacement 8-24

C

Capacities and recommended fuel/lubricants 9-2
Car phone or CB radio 4-31
Cargo (See vehicle loading information) 2-32
Cargo net 2-32
Catalytic converter, Three way catalyst 5-3
CD care and cleaning 4-29
Cellular phone holder 2-28
Child restraints 1-32
  Installation on front passenger seat 1-42
  Installation on rear seat center or outboard positions 1-34
  Precautions on child restraints 1-32
  Top tether strap anchor point locations 1-41
  With top tether strap 1-40
Child safety 1-24
Child safety rear door lock 3-4
Chimes, Audible reminders 2-15
Circuit breaker, Fusible link 8-21
Cleaning exterior and interior 7-2, 7-3

Clock (with navigation system) 4-12
Clock (without navigation system) 4-4
Coin box 2-28
Cold weather driving 5-24
Compact Disc (CD) changer operation 4-28
Compact Disc (CD) player (See audio system) 4-27
Compact spare tire 8-32
Compass display 2-6
Console box 2-31
Control panel buttons — with navigation system 4-7
Control panel buttons — without navigation system 4-2
Controls, Heater and air conditioner controls (automatic) 4-15
Coolant
- Capacities and recommended fuel/lubricants 9-2
- Changing engine coolant 8-9
- Checking engine coolant level 8-8

Corrosion protection 7-5
Cover, Tonneau cover 2-32
Cruise control 5-14
Cup holders 2-29
Curtain side-impact air bag system (See supplemental side air bag and curtain side-impact air bag system) 1-17
CVT (Continuously Variable Transmission) 5-10
CVT fluid 8-12
CVT (Continuously Variable Transmission) selector lever lock release 5-13

D

Daytime running light system 2-23
Defroster switch, Rear window and outside mirror defroster switch 2-19
Dimensions and weights 9-9
Door open warning light 2-11
Drive belts 8-15
Driving
- Cold weather driving 5-24
- Driving with CVT (Continuously Variable Transmission) 5-10
- On-pavement and offroad driving (AWD) 5-5
- Precautions when starting and driving 5-2
- Safety precautions 5-5

E

Economy, Fuel 5-17
Emission control information label 9-11
Emission control system warranty 9-22
Engine
- Before starting the engine 5-9
- Capacities and recommended fuel/lubricants 9-2
- Changing engine coolant 8-9
- Changing engine oil 8-10
- Changing engine oil filter 8-11
- Checking engine coolant level 8-8
- Checking engine oil level 8-9
- Coolant temperature gauge 2-5
- Engine block heater 5-26
- Engine compartment check locations 8-7
- Engine cooling system 8-8
- Engine oil 8-9
- Engine oil and oil filter recommendation 9-5
- Engine oil viscosity 9-5
- Engine serial number 9-11
- Engine specifications 9-7
- If your vehicle overheats 6-10
- Starting the engine 5-10

Exhaust gas (Carbon monoxide) 5-2

F

F.M.V.S.S. certification label 9-11
Filter, Air cleaner housing filter 8-16
Flashers (See hazard warning flasher switch) 2-24
Flat tire 6-2
Floor mat cleaning 7-4
Fluid
- Brake fluid 8-12
- Capacities and recommended fuel/lubricants 9-2
- CVT fluid 8-12
- Engine coolant 8-8
- Engine oil 8-9
- Power steering fluid 8-12
- Window washer fluid 8-13

Fog light switch 2-24
Front air bag system (See supplemental restraint system) 1-15
Front manual seat adjustment 1-2
Front power seat adjustment 1-3
Fuel
- Capacities and recommended fuel/lubricants 9-2

filler cap 3-11
filler lid 3-11
Fuel economy 5-17
Fuel octane rating 9-3
Fuel recommendation 9-3
Gauge 2-5
Fuses 8-21
Fusible links 8-21

G

Garage door opener, HomeLink® Universal Transceiver 2-39
Gas cap 3-11
Gauge 2-3
Engine coolant temperature gauge 2-5
Fuel gauge 2-5
Odometer 2-4
Speedometer 2-4
Tachometer 2-4
General maintenance 8-2
Glove box 2-30
Glove box lock 2-30

H

Hazard warning flasher switch 2-24
Head restraints 1-7
Headlights
Aiming control 2-22
Bulb replacement 8-25
Headlight switch 2-20
Xenon headlights 2-19
Heated seats 2-25
Heater
Engine block heater 5-26
Heater and air conditioner (automatic) 4-15
HomeLink® Universal Transceiver 2-39
Hood, release 3-9
Horn 2-25
How to stop alarm, Vehicle security 2-16

I

Ignition switch 5-8
Key positions 5-8
Immobilizer system 2-16
Indicator lights 2-13
Inside
Automatic anti-glare mirror 3-15
Mirror 3-14
Inspection/maintenance (I/M) test 9-22
Instrument panel 2-2
Interior light 2-37
Interior light replacement 8-26
ISOFIX child restraint 1-39

J

Jump starting 6-8

K

Keyless entry (See remote keyless entry system) 3-4
Keys 3-2

L

Label, Air conditioner specification label 9-12
Label, Emission control information label 9-11
Label, F.M.V.S.S. certification label 9-11
Labels
Air bag warning labels 1-20
Engine serial number 9-11
Vehicle identification number (VIN) 9-10
LATCH system 1-39
License plate, Installing front license plate 9-13
Light
Air bag warning light 1-20
Bulb replacement 8-24
Fog light switch 2-24
Headlight switch 2-20
Headlights Bulb replacement 8-25
Interior light 2-37
Luggage lights 2-39
Replacement 8-24
Vanity mirror light 2-39
Warning/indicator lights and audible reminders 2-9, 2-13
Xenon headlights 2-19
Lights, Exterior and interior light replacement 8-26
Loading information (See vehicle loading information) 9-14
Lock
Door locks 3-2
Glove box lock 2-30
Power door lock 3-2
Low fuel warning light 2-11
Low tire pressure warning light 2-12
Low tire pressure warning system 5-3

Luggage lights 2-39

M

Maintenance
- Battery 8-14
- General maintenance 8-2
- Inside the vehicle 8-3
- Maintenance precautions 8-5
- Maintenance requirements 8-2
- Outside the vehicle 8-2
- Seat belt maintenance 1-32
- Under the hood and the vehicle 8-4

Manual front seat adjustment 1-2
Meters and gauges 2-3
Mirror
- Automatic anti-glare inside mirror 3-15
- Inside mirror 3-14
- Outside mirror control 3-15
- Outside mirrors 3-15

N

Net, Cargo net 2-32
New vehicle break-in 5-16
Nissan vehicle Immobilizer System 2-15
Nissan Vehicle Immobilizer System, Engine start 5-9

O

Odometer 2-4
Oil
- Capacities and recommended fuel/lubricants 9-2
- Changing engine oil 8-10
- Changing engine oil filter 8-11
- Checking engine oil level 8-9
- Engine oil 8-9
- Engine oil viscosity 9-5

Outside mirror control 3-15
Outside mirrors 3-15
Overheat, If your vehicle overheats 6-10
Owner's Manual/Service Manual order information 9-24

P

Parking
- Brake check 8-19
- Parking brake check 5-14
- Parking brake operation 5-14
- Parking on hills 5-20

Parking/parking on hills 5-20
Pedal position adjustment 3-13
Phone, Car phone or CB radio 4-31
Power
- Front seat adjustment 1-3
- Power door lock 3-2
- Power outlet 2-27
- Power steering fluid 8-12
- Power steering system 5-21
- Power windows 2-33

Pre-tensioner seat belt system 1-19
Precautions
- Audio operation precautions 4-20
- Braking precautions 5-21
- Cruise control precautions 5-14
- Driving safety 5-5
- Maintenance precautions 8-5
- On child restraints 1-32
- On-pavement and offroad driving precautions (AWD) 5-5
- On seat belt usage 1-22
- Precautions on supplemental restraint system 1-9
- Precautions when starting and driving 5-2

Push starting 6-10

R

Radio
- Car phone or CB radio 4-31
- Steering switch for audio system 4-30

Readiness for inspection/maintenance (I/M) test (US only) 9-22
Rear center seat belt 1-29
Rear door lock, Child safety rear door lock 3-4
Rear power point 2-27
Rear seat adjustment 1-5
Rear window and outside mirror defroster switch 2-19
Rear window wiper and washer switch 2-18
Registering your vehicle in another country 9-10
Remote keyless entry system 3-4
Reporting safety defects (US only) 9-22
Rollover 5-4

S

Safety
- Child seat belts ... 1-24
- Reporting safety defects (US only) ... 9-22
- Towing safety ... 9-18

Seat
- Belt warning light ... 1-22
- Belt warning light and chime ... 2-11

Seat adjustment
- Front manual seat adjustment ... 1-2
- Front power seat adjustment ... 1-3
- Rear seat adjustment ... 1-5

Seat belt(s)
- Child safety ... 1-24
- Infants and small children ... 1-24
- Injured persons ... 1-25
- Larger children ... 1-25
- Pre-tensioner seat belt system ... 1-19
- Precautions on seat belt usage ... 1-22
- Pregnant women ... 1-25
- Rear center seat belt ... 1-29
- Seat belt cleaning ... 7-4
- Seat belt extenders ... 1-31
- Seat belt hooks ... 1-28
- Seat belt maintenance ... 1-32
- Seat belts ... 1-22
- Three-point type with retractor ... 1-25

Seat(s)
- Driver-side memory ... 3-16
- Heated seats ... 2-25
- Seats ... 1-2

Security system, vehicle security system ... 2-15

Security systems (Nissan Vehicle Immobilizer System), Engine start ... 2-16

Security systems (See vehicle security system) ... 2-15

Servicing air conditioner ... 4-15, 4-18

Shifting, CVT (Continuously Variable Transmission) ... 5-10

Shift lock release ... 5-13

Shoulder belt height adjustment, Except for rear center seat ... 1-28

Side air bag system (See supplemental side air bag and curtain side-impact air bag system) ... 1-17

Spark plugs ... 8-16

Speedometer ... 2-4

Starting
- Before starting the engine ... 5-9
- Jump starting ... 6-8
- Precautions when starting and driving ... 5-2
- Push starting ... 6-10
- Starting the engine ... 5-10

Steering
- Power steering fluid ... 8-12
- Power steering system ... 5-21
- Steering switch for audio system ... 4-30
- Tilting steering wheel ... 3-13

Storage ... 2-28

Sun shade ... 2-36

Sun visors ... 3-14

Sunroof ... 2-35

Supplemental air bag warning labels ... 1-20

Supplemental air bag warning light ... 1-20, 2-12

Supplemental front air bag system ... 1-15

Supplemental side air bag and curtain side-impact air bag systems ... 1-17

Supplemental restraint system ... 1-9
- Precautions on supplemental restraint system ... 1-9

Switch
- Autolight switch ... 2-21
- AWD lock switch operations ... 5-18
- Fog light switch ... 2-24
- Hazard warning flasher switch ... 2-24
- Headlight aiming control switch ... 2-22
- Headlight switch ... 2-20
- Ignition switch ... 5-8
- Power door lock switch ... 3-4
- Rear window and outside mirror defroster switch ... 2-19
- Turn signal switch ... 2-24
- Vehicle dynamic control (VDC) off switch ... 2-26

T

Tachometer ... 2-4

Temperature gauge, Engine coolant temperature gauge ... 2-5

Theft (Nissan Vehicle Immobilizer System), Engine start ... 2-16

Three way catalyst ... 5-3

Tilting steering wheel ... 3-13

Tire
- Flat tire ... 6-2
- Uniform tire quality grading ... 9-21

Tire pressure, Low tire pressure warning light ... 2-12

Tires
- Low tire pressure warning system ... 5-3
- Spare tire ... 8-32

Tire chains 8-29
Tire placard 9-12
Tire pressure 8-27
Tire pressure information (with navigation system) 4-5
Tire pressure information (without navigation system) 4-10
Tire rotation 8-30
Types of tires 8-28
Wheel/tire size 9-9
Wheels and tires 8-27
Tonneau cover 2-32
Top tether strap child restraints 1-40
Towing
Tow truck towing 6-11
Towing a trailer 9-16
Towing load/specification chart 9-16
Towing safety 9-18
Trailer towing 9-16
Transceiver, HomeLink® Universal Transceiver 2-39
Transmission, CVT (Continuously Variable Transmission) 5-10
Transmission, CVT fluid 8-12
Transmission, Transmission selector lever lock release 5-13
Transmitter (See remote keyless entry system) ... 3-4
Traveling or registering your vehicle in another country 9-10
Turn signal switch 2-24

U

Underbody cleaning 7-3
Uniform tire quality grading 9-21

V

Vanity mirror light 2-39
Vehicle
Dimensions and weights 9-9
Dynamic control (VDC) off switch 2-26
Dynamic control (VDC) system 5-23
Identification number (VIN) 9-10
Loading information 9-14
Recovery (freeing a stuck vehicle) 6-14
Security system 2-15
Ventilators 4-14

W

Warning labels, Air bag warning labels 1-20
Warning light
Air bag warning light 1-20, 2-12
Anti-lock brake warning light 2-9
AWD warning light 5-19
Brake warning light 2-10
Door open warning light 2-11
Low fuel warning light 2-11
Low tire pressure warning light 2-12
Seat belt warning light and chime 2-11
Warning lights 2-9
Warning, Hazard warning flasher switch 2-24
Warning, Low tire pressure warning system 5-3
Warning, Warning/indicator lights and audible reminders 2-9
Warranty, Emission control system warranty 9-22
Washer switch
Rear window wiper and washer switch 2-18
Windshield wiper and washer switch 2-18
Washing 7-2
Waxing 7-2
Weights (See dimensions and weights) 9-9
Wheel/tire size 9-9
Wheels and tires 8-27
Cleaning aluminum alloy wheels 7-3
Window washer fluid 8-13
Window(s)
Cleaning 7-3
Power windows 2-33
Windshield wiper and washer switch 2-18
Wiper
Rear window wiper and washer switch 2-18
Windshield wiper and washer switch 2-18
Windsheild wiper blades 8-17
Rear window wiper blade 8-19

X

Xenon headlights 2-19

GAS STATION INFORMATION

FUEL RECOMMENDATION:

Use unleaded regular gasoline with an octane rating of at least 87 AKI (Anti-Knock Index) number (Research octane number 91).

For improved vehicle performance, NISSAN recommends the use of unleaded premium gasoline with an octane rating of at least 91 AKI number (Research octane number 96).

CAUTION

Using a fuel other than that specified could adversely affect the emission control systems, and may also affect warranty coverage.

Under no circumstances should a leaded gasoline be used, since this will damage the three way catalyst.

For additional information, see “Capacities and recommended fuel/lubricants” in the “9. Technical and consumer information” section.

ENGINE OIL RECOMMENDATION:

- API Certification Mark
- API grade SG/SH, Energy Conserving I & II or API grade SJ or SL, Energy Conserving
- ILSAC grade GF-I, GF-II & GF-III
- SAE 5W-30 viscosity oil is preferred for all ambient temperatures. SAE 10W-30, 10W-40 viscosity oil may be used for ambient temperatures above 0°F (−18°C).

See “Capacities and recommended fuel/lubricants” in the “9. Technical and consumer information” section for engine oil and oil filter recommendation.

COLD TIRE PRESSURES:

See tire placard affixed to the center pillar.

NEW VEHICLE BREAK-IN PROCEDURES RECOMMENDATION:

During the first 1,000 miles (1,600 km) of vehicle use, follow the recommendations outlined in the “Break-in schedule” Information found in the “5. Starting and driving” section of this Owner’s Manual.

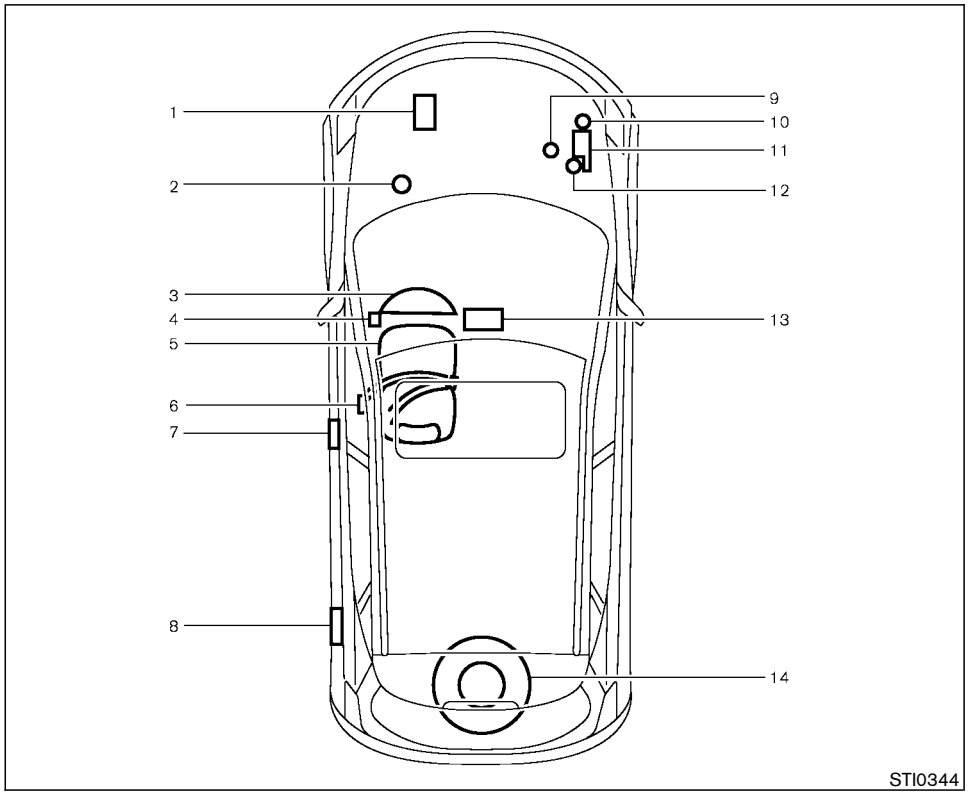

QUICK REFERENCE

1. Battery (P.8-14)
2. Brake fluid (P.8-12)
3. Meters and gauges (P.2-3)
4. Hood release (P.3-9)
5. Seat (P.1-2)
6. Seat belt (P.1-22)
7. Door lock/key (P.3-3)
8. Fuel (P.3-11, P.9-2)
9. Engine oil (P.8-9)
10. Windshield washer fluid (P.8-13)
11. Engine coolant (P.8-8)
12. Power steering fluid (P.8-12)
13. Audio system (P.4-19)/
    Heater and air conditioner (P.4-15)
14. Spare tire (P.6-4, P.8-32)