Foreword

Welcome to the growing group of value–conscious people who drive Toyotas. We are proud of the advanced engineering and quality construction of each vehicle we build.

This Owner’s Manual explains the operation of your new Toyota. Please read it thoroughly and have all the occupants follow the instructions carefully. Doing so will help you enjoy many years of safe and trouble–free motoring. For important information about this manual and your Toyota, read the following pages carefully.

When it comes to service, remember that your Toyota dealer knows your vehicle very well and is interested in your complete satisfaction. Your Toyota dealer will provide quality maintenance and any other assistance you may require.

If there is not a Toyota dealer near you, please call the following number:

U.S. OWNERS:
- When traveling in the U.S. mainland or Canada:
  Toyota Customer Experience Center **Toll–free:1–800–331–4331**
- Hawaii:
  Servco Automotive Customer Services **Toll–free:1–888–272–5515**

CANADIAN OWNERS:
- When traveling in Canada or the U.S. mainland:
  Toyota Canada Customer Interaction Centre **Toll–free:1–888–TOYOTA–8 or 1–888–869–6828**

Please leave this Owner’s Manual in this vehicle at the time of resale. The next owner will need this information also.

All information and specifications in this manual are current at the time of printing. However, because of Toyota’s policy of continual product improvement, we reserve the right to make changes at any time without notice.

Please note that this manual applies to all models and explains all equipment, including options. Therefore, you may find some explanations for equipment not installed on your vehicle.

Please access our websites for further information.

- The U.S. mainland **www.toyota.com**
- Hawaii **www.toyotahawaii.com**
- Canada **www.toyota.ca**

TOYOTA MOTOR CORPORATION

© 2005 TOYOTA MOTOR CORPORATION

All rights reserved. This material may not be reproduced or copied, in whole or in part, without the written permission of Toyota Motor Corporation.

Important information about this manual

Safety and vehicle damage warnings

Throughout this manual, you will see safety and vehicle damage warnings. You must follow these warnings carefully to avoid possible injury or damage.

The types of warnings, what they look like, and how they are used in this manual are explained as follows:

⚠ CAUTION

This is a warning against anything which may cause injury to people if the warning is ignored. You are informed about what you must or must not do in order to reduce the risk of injury to yourself and others.

NOTICE

This is a warning against anything which may cause damage to the vehicle or its equipment if the warning is ignored. You are informed about what you must or must not do in order to avoid or reduce the risk of damage to your vehicle and its equipment.

Safety symbol

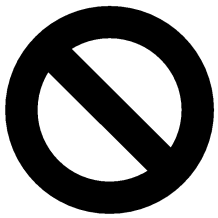

00060

When you see the safety symbol shown above, it means: “Do not...”; “Do not do this”; or “Do not let this happen”.

Important information about your Toyota

Occupant restraint systems

Toyota encourages you and your family to take the time to read Section 1–3 of this Owner’s Manual carefully. In terms of helping you understand how you can receive the maximum benefit of the occupant restraint systems this vehicle provides, Section 1–3 of this Owner’s Manual is the most important Section for you and your family to read.

Section 1–3 describes the function and operation concerning seats, seat belts, SRS airbags and child restraint systems of this vehicle and some potential hazards you should be aware of. These systems work together along with the overall structure of this vehicle in order to provide occupant restraint in the event of a crash. The effect of each system is enhanced when it is used properly and together with other systems. No single occupant restraint system can, by itself, provide you or your family with the equal level of restraint which these systems can provide when used together. That is why it is important for you and your family to understand the purpose and proper use of each of these systems and how they relate to each other.

The purpose of all occupant restraint systems is to help reduce the possibility of death or serious injury in the event of a collision. None of these systems, either individually or together, can ensure that there is no injury in the event of collision. However, the more you know about these systems and how to use them properly, the greater your chances become of surviving an accident without death or serious injury.

Seat belts provide the primary restraint to all occupants of the vehicle, and every occupant of the vehicle should wear seat belts properly at all times. Children should always be secured in child restraint systems that are appropriate for their age and size. SRS (Supplemental Restraint System) airbags are, as their names imply, designed to work with, and be supplemental to, seat belts and are not substitutes for them. SRS airbags can be very effective in reducing the risk of head and chest injuries by preventing contact of the head and chest with interior portions of the vehicle.

In order to be effective, the SRS airbags must deploy with tremendous speed. The rapid deployment of the SRS airbags makes the SRS airbags themselves potential sources of serious injury if an occupant is too close to an airbag, or if an object or some part of his or her body has been placed between the occupant and the airbag at the time of deployment. This is just one example of how the instructions in Section 1–3 of this Owner’s Manual will help ensure proper use of the occupant restraint systems, and increase the safety they can provide to you and your family in the event of an accident.

Toyota recommends you to read the provisions in Section 1–3 carefully and refer to them as needed during your time of ownership of this vehicle.

Event data recorder

Your vehicle has computers that monitor and control certain aspects of your vehicle. These computers assist in driving and maintaining optimal vehicle performance. Besides storing data useful for troubleshooting, there is a system to record data in a crash or a near car crash event. This is called an Event Data Recorder (EDR).

The SRS airbag sensor assembly contains the EDR. In a crash or a near car crash event, this device may record some or all of the following information:

- Engine speed
- Whether the brake pedal was applied or not
- Vehicle speed
- To what extent the accelerator pedal was depressed
- Position of the transmission selector lever
- Whether the driver and front passenger wore the seat belts or not
- Driver’s seat position
- Front passenger’s occupant classification

- SRS airbag deployment data
- SRS airbag system diagnostic data

If your vehicle is equipped with a vehicle stability control (VSC) system, its Electronic Control Unit (ECU) may contain another EDR. There are a variety of driving situations which include activating the VSC under which the VSC EDR will record certain information. The VSC EDR may record some or all of the following information:

- Behavior of the vehicle
- Steering wheel angle
- Vehicle speed
- To what extent the accelerator pedal was depressed
- To what extent the brake pedal was applied
- To what extent the ECU controlled the condition of the 4 wheels
- Vehicle stability control system diagnostic data

The information above is intended to be used for the purpose of improving vehicle safety performance. Unlike general data recorders, the EDR does not record sound data such as conversation between passengers.

Toyota will not disclose the data recorded in an EDR to a third party except when:

- An agreement from the vehicle’s owner (or the leasing company for a leased vehicle) is obtained
- Officially requested by the police or other authorities
- Used as a defense for Toyota in a law suit
- Ordered by the court

However, if necessary Toyota will:

- Use the data for research on Toyota vehicle safety performance
- Disclose the data to a third party for research purposes without disclosing details of the vehicle owner, and only when it is deemed necessary
- Disclose summarized data cleared of vehicle identification information to a non–Toyota organization for research purposes

New vehicle warranty

Your new vehicle is covered by the following Toyota limited warranties:

- New vehicle warranty
- Emission control systems warranty
- Others

For further information, please refer to the “Owner’s Warranty Information Booklet” or “Owner’s Manual Supplement”.

Your responsibility for maintenance

It is the owner’s responsibility to make sure that the specified maintenance is performed. Section 6 gives details of these maintenance requirements. Also included in Section 6 is general maintenance. For scheduled maintenance information, please refer to the “Scheduled Maintenance Guide” or “Owner’s Manual Supplement”.

Important health and safety information about your Toyota

⚠ CAUTION

- **WARNING: Engine exhaust, some of its constituents, and a wide variety of automobile components contain or emit chemicals known to the State of California to cause cancer and birth defects and other reproductive harm. In addition, oils, fuels and fluids contained in vehicles as well as waste produced by component wear contain or emit chemicals known to the State of California to cause cancer and birth defects or other reproductive harm.**
- **Battery posts, terminals and related accessories contain lead and lead compounds. Wash your hands after handling. Used engine oil contains chemicals that have caused cancer in laboratory animals. Always protect your skin by washing thoroughly with soap and water.**

Accessories, spare parts and modification of your Toyota

A wide variety of non–genuine spare parts and accessories for Toyota vehicles are currently available in the market. You should know that Toyota does not warrant these products and is not responsible for their performance, repair, or replacement, or for any damage they may cause to, or adverse effect they may have on, your Toyota vehicle.

This vehicle should not be modified with non–genuine Toyota products. Modification with non–genuine Toyota products could affect its performance, safety or durability, and may even violate governmental regulations. In addition, damage or performance problems resulting from the modification may not be covered under warranty.

Spark ignition system of your Toyota

The spark ignition system in your Toyota meets all requirements of the Canadian Interference–Causing Equipment Standard.

Installation of a mobile two–way radio system

As the installation of a mobile two–way radio system in your vehicle could affect electronic systems such as follows, be sure to check with your Toyota dealer for precautionary measures or special instructions regarding installation.

- Multiport fuel injection system/sequential multiport fuel injection system
- SRS airbag system
- Seat belt pretensioner system
- Traction control system (two–wheel drive models)
- Active traction control system (four–wheel drive models)
- “AUTO LSD” system (two–wheel drive models)
- Vehicle stability control system
- Downhill assist control system (four–wheel drive models)
- Hill–start assist control system
- Rear height control air suspension
- Tire pressure warning system
- Cruise control system
- Anti–lock brake system
- Electronic throttle control system

Tires and loading on your Toyota

Underinflated or overinflated tire pressure and the excess load may result in the deterioration of steering ability and braking ability, leading to an accident. Check the tire inflation pressure periodically and be sure to keep the load limits given in this Owner’s Manual. For details about tire inflation pressure and load limits, see pages 381 and 304.

Scrapping of your Toyota

The SRS airbag and seat belt pretensioner devices in your Toyota contain explosive chemicals. If the vehicle is scrapped with the airbags and pretensioners left as they are, it may cause an accident such as fire. Be sure to have the systems of the SRS airbag and seat belt pretensioner removed and disposed of by a qualified service shop or by your Toyota dealer before you dispose of your vehicle.

On−pavement and off−road driving tips

This vehicle belongs to the utility vehicle class. Utility vehicles have a significantly higher rollover rate than other types of vehicles. This vehicle will handle and maneuver differently from an ordinary passenger car because it is designed for off−road use also. In addition, this vehicle has a higher ground clearance and center of gravity than that of an ordinary passenger car. This vehicle design feature causes this type of vehicle to be more likely to rollover. Failure to operate this vehicle correctly may result in loss of control, accidents or vehicle rollover causing death or serious injury. Be sure to read “Off−road vehicle precautions” on page 282 in Section 2 and “Off−road driving precautions” on page 313 in Section 3.

Leak detection pump

This pump performs fuel evaporation leakage check. This check is done approximately five hours after the engine is turned off. So you may hear sound coming from underneath the luggage compartment for several minutes. It does not indicate a malfunction.

SECTION 1–1

OPERATION OF INSTRUMENTS AND CONTROLS

Overview of instruments and controls

Instrument panel overview 2
Instrument cluster overview 6
Indicator symbols on the instrument panel 7

Instrument panel overview

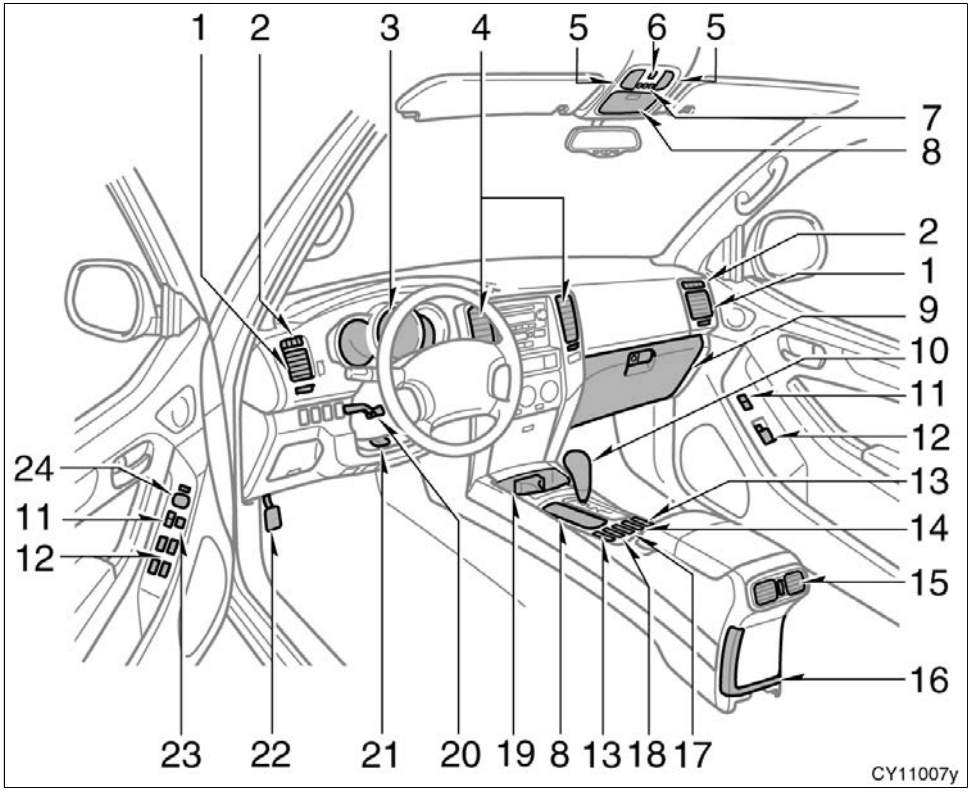

1. Side vents
2. Side defroster outlets
3. Instrument cluster
4. Center vents
5. Personal lights
6. Electric moon roof switch
7. Garage door opener
8. Auxiliary boxes
9. Glove box
10. Automatic transmission selector lever
11. Power door lock switches
12. Power window switches
13. Seat heater switches
14. “HEIGHT CONTROL OFF” switch
15. Rear vents
16. Trash holder
17. Height select switch
18. “DAC” switch
19. Front cup holders
20. Tilt steering lock release lever

21. Telescopic steering lock release lever
22. Parking brake pedal
23. Window lock switch
24. Power rear view mirror control switches

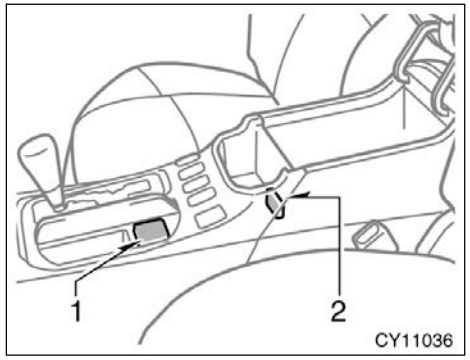

Rear console box

1. Power outlet (12 VDC)
2. Power outlet (115 VAC)

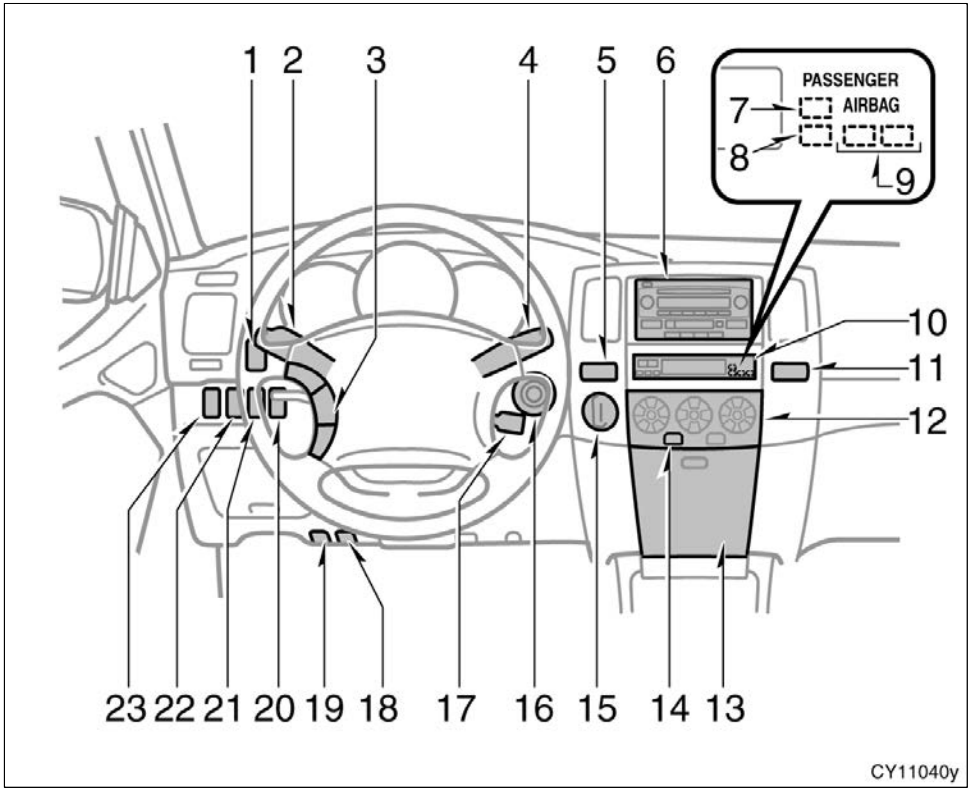

1. Instrument panel light control dial
2. Headlight, turn signal and front fog light switches
3. Audio remote control switches
4. Wiper and washer switches
5. Power back window switch
6. Audio system/rear view monitor system and navigation system including audio system (For the navigation system, see the separate “Navigation System Owner’s Manual”.)
7. Front passenger’s seat belt reminder light
8. Engine immobilizer/theft deterrent system indicator light
9. Front passenger occupant classification indicator light
10. Multi–information display
11. Emergency flasher switch
12. Air conditioning controls
13. Auxiliary box
14. Back window and outside rear view mirror defogger switch
15. Four–wheel drive control switch knob (full–time four–wheel drive models) or multi–mode control switch knob (multi–mode four–wheel drive models)

16. Ignition switch
17. Cruise control switch
18. Hood lock release lever
19. Fuel filler door opener
20. Roll sensing of curtain shield airbags off switch
21. “AUTO LSD” switch
22. Center differential lock switch
23. Power outlet main switch

Instrument cluster overview

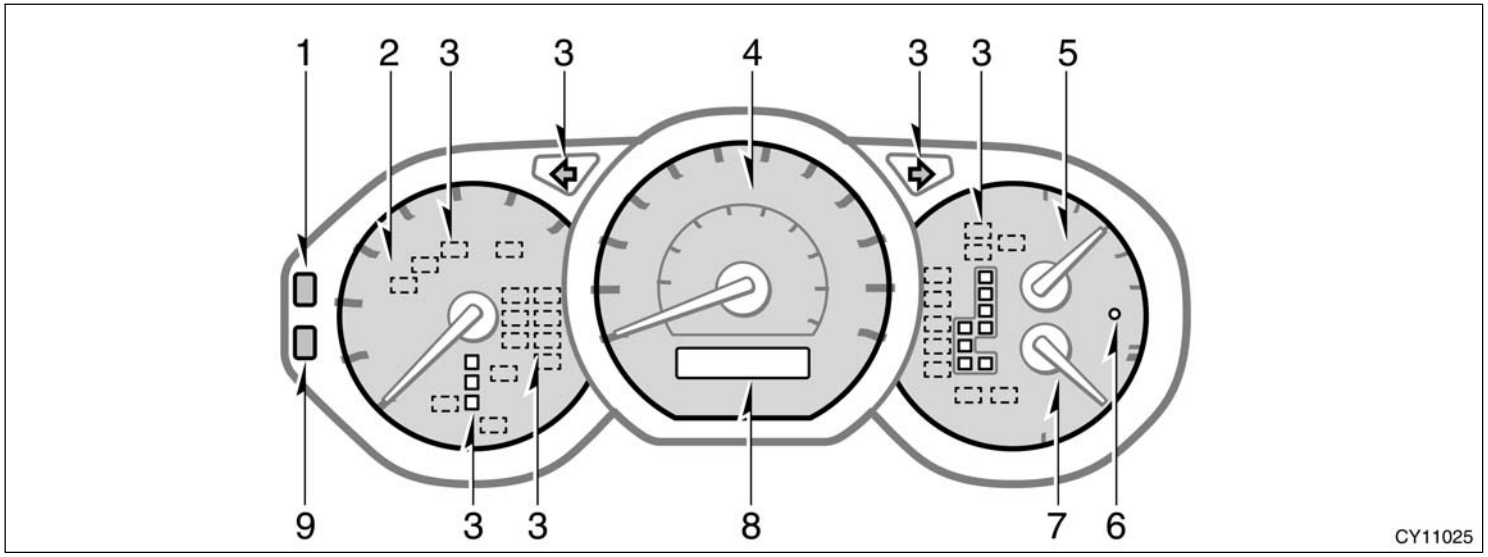

1. Trip meter reset button
2. Tachometer
3. Service reminder indicators and indicator lights
4. Speedometer
5. Fuel gauge
6. Low fuel level warning light
7. Engine coolant temperature gauge
8. Odometer and two trip meters
9. Odometer/two trip meter changeover button

Indicator symbols on the instrument panel

BRAKE	Brake system warning light*1
	Driver’s seat belt reminder light*1
PASSENGER	Front passenger’s seat belt reminder light*1
	Discharge warning light*1
	Low engine oil pressure warning light*1
CHECK	Malfunction indicator lamp*1
MAINT	Engine oil replacement reminder light*1 (for vehicles sold in U.S.A.)
ABS or ABS	Anti–lock brake system warning light*1

VSC TRAC	● Vehicle stability control system warning light*1 ● Traction control system warning light*1 (two–wheel drive models) ● Active traction control system warning light*1 (four–wheel drive models) ● “AUTO LSD” system warning light*1 (two–wheel drive models) ● Downhill assist control system warning light*1 (four–wheel drive models) ● Hill–start assist control system warning light*1
	Open door warning light*1
	SRS warning light*1
A/T OIL TEMP	Automatic transmission fluid temperature warning light*1 (four–wheel drive models)
	Low tire pressure warning light*1

	Low windshield washer fluid level warning light*1 (for vehicles sold in Canada)
	Engine immobilizer/theft deterrent system indicator light
RSCA OFF	Roll sensing of curtain shield airbags off indicator light*2
PASSENGER AIRBAG OFF ON	Front passenger occupant classification indicator light
	Headlight low beam indicator light
	Tail light indicator light
	Headlight high beam indicator light
	Turn signal indicator lights

P R N D 4 3 2 L	Automatic transmission indicator lights
4LO	Low speed four–wheel drive indicator light*3 (four–wheel drive models)
	Center differential lock indicator light*3 (four–wheel drive models)
VSC OFF	Vehicle stability control system off indicator light (four–wheel drive models)
	Four–wheel drive indicator light*3 (multi–mode four–wheel drive models)
	Slip indicator light
AUTO LSD	“AUTO LSD” indicator light (two–wheel drive models)
	Downhill assist control system indicator light (four–wheel drive models)
HI N LO	Height control indicator lights

OFF	Height control “OFF” indicator light*4
CRUISE	Cruise control indicator light*5

*1: For details, see “Service reminder indicators and warning buzzers” on page 145 in Section 1–6.

*2: For details, see “Roll sensing of curtain shield airbags off switch” on page 94 in Section 1–3.

*3: If this light flashes, see “Four–wheel drive system” on page 162 in Section 1–7.

*4: If this light flashes, see “Rear height control air suspension” on page 182 in Section 1–7.

*5: If this light flashes, see “Cruise control” on page 193 in Section 1–7.

SECTION 1–2

OPERATION OF INSTRUMENTS AND CONTROLS

Keys and Doors

Keys 12
Engine immobilizer system 14
Wireless remote control 15
Side doors 22
Power windows 27
Power back window 30
Back door 32
Hood 34
Theft deterrent system 35
Fuel tank cap 36
Electric moon roof 38

Keys

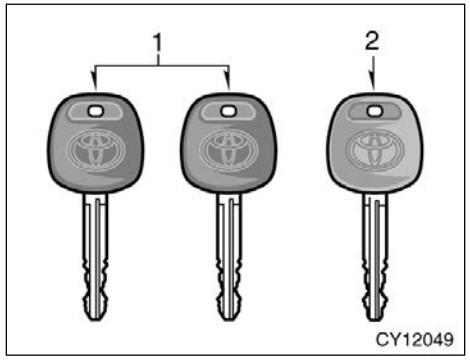

Your vehicle is supplied with the two kinds of keys.

1. Master keys (black)—These keys work in every lock. Your Toyota dealer will need one of them to make a new key with a built–in transponder chip.
2. Sub key (gray)—This key does not work in the glove box.

A transponder chip for engine immobilizer system has been placed in the head of the master and sub keys. These chips are needed to enable the system to function correctly, so be careful not to lose these keys. If you make your own duplicate key, you will not be able to cancel the system or start the engine.

To protect items locked in the glove box when using valet parking, leave the sub key with the attendant.

Since the side doors can be locked without a key, you should always carry a spare key in case you accidentally lock your keys inside the vehicle.

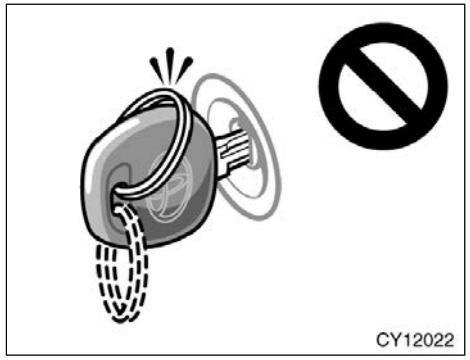

NOTICE

When using a key containing a transponder chip, observe the following precautions:

- ***When starting the engine, do not use the key with a key ring resting on the key grip and do not press the key ring against the key grip. Otherwise the engine may not start, or may stop soon after it starts.***

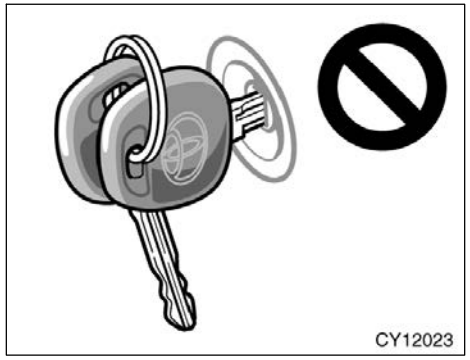

◆*When starting the engine, do not use the key with other transponder keys around (including keys of other vehicles) and do not press other key plates against the key grip. Otherwise the engine may not start, or may stop soon after it starts. If this happens, remove the key once and then insert it again after removing other transponder keys (including keys of other vehicles) from the ring or while gripping or covering them with your hand to start the engine.*

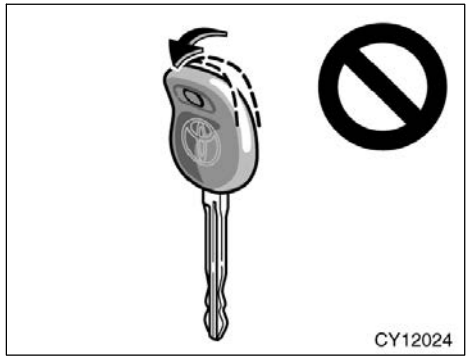

◆*Do not bend the key grip.*

◆*Do not cover the key grip with any material that cuts off electromagnetic waves.*

◆*Do not knock the key hard against other objects.*

◆*Do not leave the key exposed to high temperatures for a long period, such as on the dashboard and hood under direct sunlight.*

◆*Do not put the key in water or wash it in an ultrasonic washer.*

◆*Do not use the key with electromagnetic materials.*

Engine immobilizer system

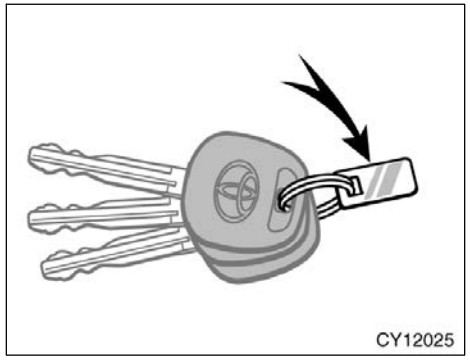

KEY NUMBER PLATE

Your key number is shown on the plate. Keep the plate in a safe place such as your wallet, not in the vehicle.

If you should lose your keys or if you need additional keys, duplicates can be made by a Toyota dealer using the key number.

We recommend writing down the key number and storing it in a safe place.

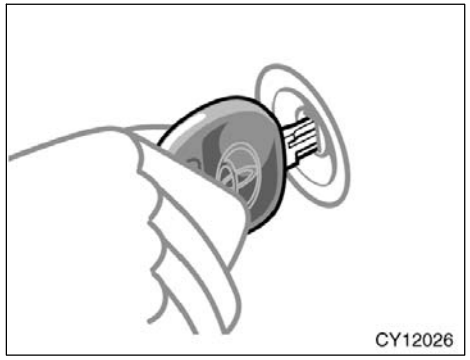

The engine immobilizer system is a theft prevention system. When you insert the key in the ignition switch, the transponder chip in the key’s head transmits an electronic code to the vehicle. The engine will start only when the electronic code in the chip corresponds to the registered ID code for the vehicle.

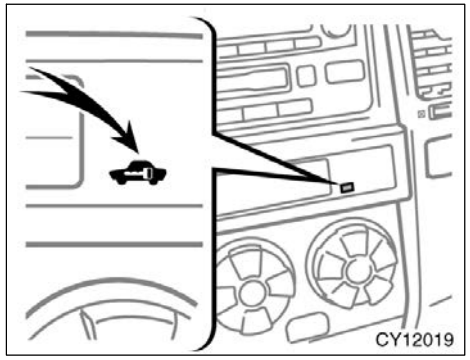

The system is automatically set when the key is removed from the ignition switch. The indicator light will start flashing to show the system is set.

If any of the following indicator conditions occurs, contact your Toyota dealer.

- The indicator light stays on except when the theft deterrent system is setting or activating. (See “Theft deterrent system” on page 35 in this Section.)
- The indicator light does not start flashing when the key is removed from the ignition switch.
- The indicator light flashes inconsistently.

Inserting the registered key in the ignition switch automatically cancels the system, which enables the engine to start. The indicator light will go off.

For your Toyota dealer to make you a new key with built–in transponder chip, your dealer will need your key number and master key. However, there is a limit to the number of additional keys your Toyota dealer can make for you.

If you make your own duplicate key, you will not be able to cancel the system or start the engine.

NOTICE

Do not modify, remove or disassemble the engine immobilizer system. If any unauthorized changes or modifications are made, proper operation of the system cannot be guaranteed.

For vehicles sold in U.S.A.

This device complies with Part 15 of the FCC Rules. Operation is subject to the following two conditions:

(1) this device may not cause harmful interference, and (2) this device must accept any interference received, including interference that may cause undesired operation.

CAUTION

Changes or modifications not expressly approved by the party responsible for compliance could void the user’s authority to operate the equipment.

For vehicles sold in Canada

This device complies with RSS–210 of Industry Canada. Operation is subject to the following two conditions:

(1) this device may not cause interference, and (2) this device must accept any interference, including interference that may cause undesired operation of the device.

Wireless remote control—

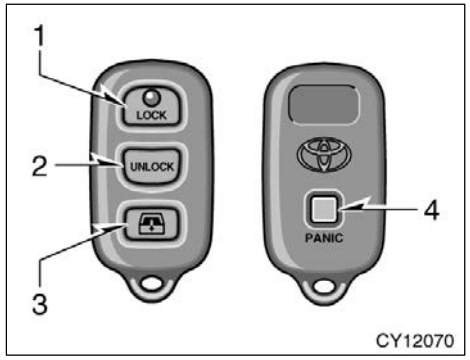

1. “LOCK” switch
2. “UNLOCK” switch
3. Back window open switch
4. “PANIC” switch

The wireless remote control system is designed to lock or unlock all the side doors and back door, open the back window or activate the “PANIC” mode from a distance within approximately 1 m (3 ft.) of the vehicle.

When you operate any switch, push it slowly and securely.

The wireless remote control transmitter is an electronic component. Observe the following instructions in order not to cause damage to the transmitter.

- Do not leave the transmitter in places where the temperature becomes high such as on the dashboard.
- Do not disassemble it.
- Avoid knocking it hard against other objects or dropping it.
- Avoid putting it in water.

You can use up to 4 wireless remote control transmitters for the same vehicle. Contact your Toyota dealer for detailed information.

If the wireless remote control transmitter does not actuate the doors, back window or alarm, operate from a normal distance:

- Check for closeness to a radio transmitter such as a radio station or an airport which can interfere with normal operation of the transmitter.
- The battery may have been consumed. Check the battery in the transmitter. To replace the battery, see following “—Replacing battery” on page 20.

If you lose your transmitter, contact your Toyota dealer as soon as possible to avoid the possibility of theft, or an accident. (See “If you lose your wireless remote control transmitter” on page 351 in Section 4.)

—Locking and unlocking doors

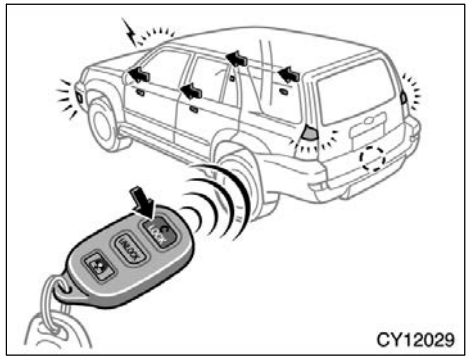

Locking operation

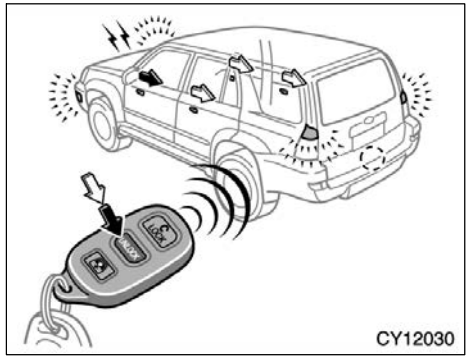

Unlocking operation

To lock and unlock all the side doors and back door, push the switches of the transmitter slowly and securely.

To lock: Push the “LOCK” switch. All the side doors and back door are locked simultaneously. At this time one beep will be heard, and the turn signal lights flash once.

Check to see that all the side doors and back door are securely locked.

If any of the side doors or the back door is not securely closed, locking cannot be performed by the “LOCK” switch and a beep will sound continuously for 10 seconds. However, if the key is in the ignition switch, a beep will not sound.

To stop the buzzer, close all the side doors and back door securely or push the “UNLOCK” switch.

The buzzer can be disabled. For details, contact your Toyota dealer.

To unlock: Push the “UNLOCK” switch once to unlock the driver’s door alone. Pushing the switch twice within 3 seconds unlocks all the side doors and back door simultaneously. Each time the “UNLOCK” switch is pushed, two beeps will be heard, and the turn signal lights flash twice.

This double switch operation to unlock all the side doors and back door can be changed to a single switch operation. For details, contact your Toyota dealer.

When the “UNLOCK” switch is pressed, the interior light, luggage compartment light, ignition switch light and running board lights (on some models) will come on and remain on for about 15 seconds before fading out. (For details, see “Interior light” on page 134, “Luggage compartment light” on page 135, “Ignition switch light” on page 136 and “Running board lights” on page 137 in Section 1–5.)

You have 30 seconds to open a door after using the wireless remote unlock feature. If a door is not opened by then, all the side doors and back door will be automatically locked again.

The timing for the automatic door lock function can be changed. For details, contact your Toyota dealer.

If the “LOCK” or “UNLOCK” switch is kept pressed in, the locking or unlocking operation is not repeated. Release the switch and then push again.

The following adjustments can be made in this system. For details, contact your Toyota dealer.

- Cancelling the wireless door locking or unlocking function
- Cancelling the flash of the turn signal lights
- Changing the volume of beep sound

—Opening back window

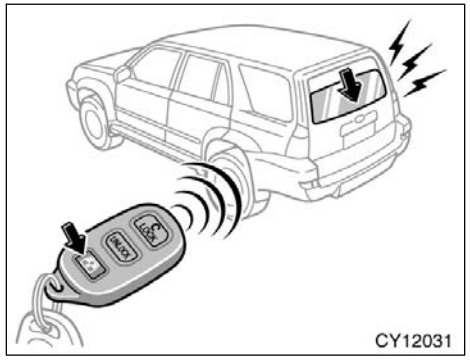

To open the back window, push the back window open switch of the transmitter for about 1 second. The window will fully open.

At this time, you can hear a beep.

If the ignition switch is in the “ON” position, the back window cannot be opened by the back window open switch.

To open the back window with the key, see “Power back window” on page 30 in this Section.

The back window opening program by wireless remote control can be changed or disabled. For details, contact your Toyota dealer.

—Activating panic mode

Pushing the “PANIC” switch blows the horn intermittently and flashes the headlights, tail lights and turn signal lights, and turns on the interior and luggage compartment lights.

The “PANIC” switch is used to deter vehicle theft when you witness anyone attempting to break into or damage your vehicle.

The alarm will last for one minute. To stop alarm midway, push any of the switch on the wireless remote control transmitter. You can also stop the alarm by turning the ignition key from the “LOCK” to “ON” position.

The “PANIC” mode does not work when the ignition key is in the “ON” position.

This alarm function can be disabled. For details, contact your Toyota dealer.

For vehicles sold in U.S.A.

This device complies with Part 15 of the FCC Rules. Operation is subject to the following two conditions:

(1) This device may not cause harmful interference, and (2) this device must accept any interference received, including interference that may cause undesired operation.

NOTICE:
This equipment has been tested and found to comply with the limits for a Class B digital device, pursuant to Part 15 of the FCC Rules. These limits are designed to provide reasonable protection against harmful interference in a residential installation. This equipment generates, uses and can radiate radio frequency energy and, if not installed and used in accordance with the instructions, may cause harmful interference to radio communications. However, there is no guarantee that interference will not occur in a particular installation. If this equipment does cause harmful interference to radio or television reception, which can be determined by turning the equipment off and on, the user is encouraged to try to correct the interference by one or more of the following measures:

- Reorient or relocate the receiving antenna.
- Increase the separation between the equipment and receiver.
- Connect the equipment into an outlet on a circuit different from that to which the receiver is connected.
- Consult the dealer or an experienced radio / TV technician for help.

FCC WARNING:
Changes or modifications not expressly approved by the party responsible for compliance could void the user’s authority to operate the equipment.

For vehicles sold in Canada

Operation is subject to the following two conditions:

(1) this device may not cause interference, and (2) this device must accept any interference, including interference that may cause undesired operation of the device.

—Replacing battery

For replacement, use a CR2016 lithium battery or equivalent.

⚠ CAUTION

Special care should be taken to prevent small children from swallowing the removed transmitter battery or components.

NOTICE

- ***When replacing the transmitter battery, be careful not to lose the components.***
- ***Replace only with the same or equivalent type recommended by a Toyota dealer.***
- ***Dispose of used batteries according to the local laws.***

Replace the transmitter battery by following these procedures:

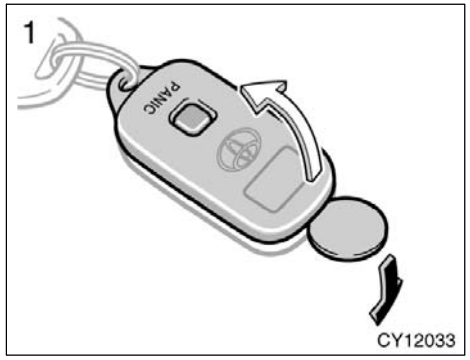

1. Using a coin or equivalent, open the transmitter case.

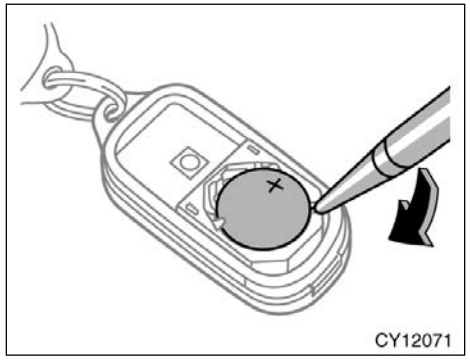

2. Remove the discharged transmitter battery by ballpoint pen.

   Insert the tip of ballpoint pen at the guide groove and lift as shown in the above illustration.

NOTICE

Do not bend the terminals.

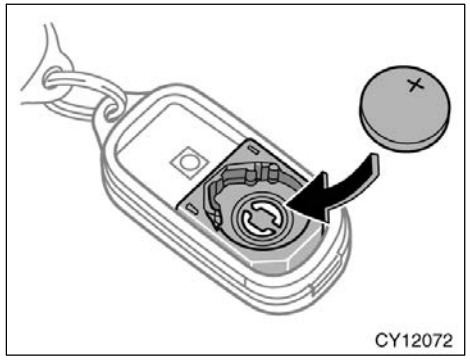

3. Put in a new transmitter battery with positive (+) side up.

Close the transmitter case securely.

NOTICE

- ***Make sure the positive side and negative side of the transmitter battery are faced correctly.***
- ***Do not replace the battery with wet hands. Water may cause unexpected rust.***
- ***Do not touch or move any components inside the transmitter, or it may interfere with proper operation.***
- ***Be careful not to bend the electrode when inserting the transmitter battery and that dust or oils do not adhere to the transmitter case.***
- ***Close the transmitter case securely.***

After replacing the battery, check that the transmitter operates properly. If the transmitter still does not operate properly, contact your Toyota dealer.

Side doors—

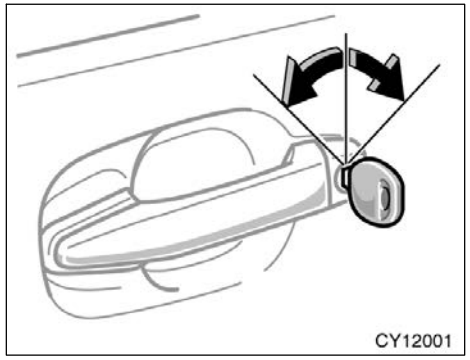

LOCKING AND UNLOCKING WITH KEY

Insert the key into the keyhole and turn it.

To lock: Turn the key forward.
To unlock: Turn the key backward.

All the side doors and back door lock and unlock simultaneously with the driver’s door. In the driver’s door lock, turning the key once will unlock the driver’s door and twice in succession will unlock all the side doors and back door simultaneously.

This double key turning operation to unlock all the side doors and back door can be changed to a single key turning operation. For details, contact your Toyota dealer.

When any of the side doors and back door is unlocked with a key, the interior light, luggage compartment light, ignition switch light and running board lights (on some models) will come on and remain on for about 15 seconds before fading out. (For details, see “Interior light” on page 134, “Luggage compartment light” on page 135, “Ignition switch light” on page 136 and “Running board lights” on page 137 in Section 1–5.)

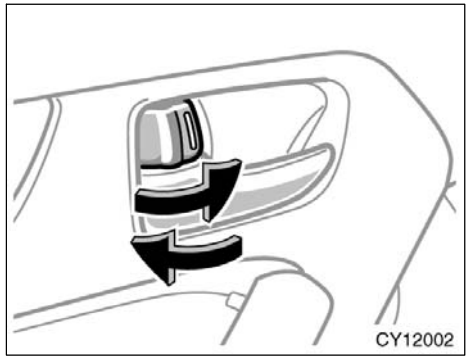

LOCKING AND UNLOCKING WITH INSIDE LOCK KNOB

Move the lock knob.

To lock: Push the knob forward.
To unlock: Pull the knob backward.

The front doors can be opened by pulling the inside handles even if the lock knobs are in the locked position.

⚠ CAUTION

Do not pull the inside handle of the front doors while driving. The doors will open and an accident may occur. Toyota strongly recommends that all children be placed in the rear seat of the vehicle.

Closing the door with the lock knob in the lock position will also lock the door. Be careful not to lock your keys in the vehicle.

The front doors cannot be locked if you leave the key in the ignition switch.

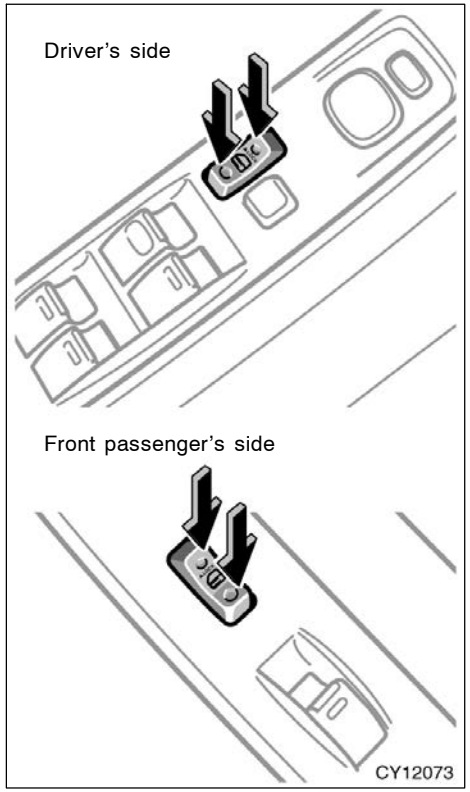

LOCKING AND UNLOCKING WITH POWER DOOR LOCK SWITCH

Push the switch.

To lock: Push the switch down on the front side.
To unlock: Push the switch down on the rear side.

Operating the switch simultaneously locks or unlocks all the side doors and back door.

If you do either of the following, no side door or back door can be unlocked with the power door lock switch.

- Lock all the side doors and back door with the key or wireless remote control transmitter when all the side doors and back door are closed.
- Open the driver’s door or front passenger’s door and move the inside lock knobs of both front doors to the lock position, then close the front doors.

The power door lock switch can be reset in the following ways.

- Turn the ignition key to “ON”.
- Unlock all the side doors and back door with the key or wireless remote control transmitter.
- Unlock the driver’s door or front passenger’s door with the inside lock knob, and then unlock all the side doors and back door with the power door lock switch.

This unlocking protection with the power door lock switch can be disabled. For details, contact your Toyota dealer.

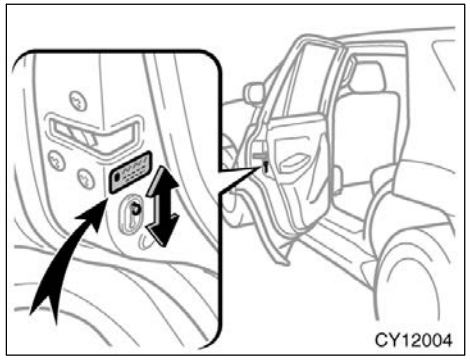

REAR DOOR CHILD–PROTECTORS

Move the lock lever to the “LOCK” position as shown on the label.

When the child–protector is locked, you cannot open the rear door by the inside door handle. We recommend using this feature whenever small children are in the vehicle.

⚠ CAUTION

Before driving, be sure that the doors are closed and locked, especially when small children are in the vehicle. Along with the proper use of seat belts, locking the doors helps prevent the driver and passengers from being thrown out from the vehicle in an accident. It also helps prevent the doors from being opened unintentionally.

—Automatic door locking and unlocking functions

AUTOMATIC DOOR LOCKING

You can select the following functions:

- **Locking linked with the shift position**

  All doors are automatically locked when the selector lever is moved out of “P” position. This function is the default setting for new vehicles.

- **Locking linked with vehicle speed**

  All doors are automatically locked when the vehicle speed goes above about 20 km/h (12 mph).

You can set or cancel the automatic door locking functions:

Be sure to apply the parking brake when performing the following operations.

To select the locking linked with the shift position:

1. Close all doors and turn the ignition switch to the “ON” position.
2. Shift the selector lever to the “P” position.
3. Within 10 seconds of turning the ignition switch to the “ON” position, press and hold the driver’s side power door lock switch in the lock position for 5 seconds and then release.

   The doors will be locked and unlocked to indicate that the function is set.

To cancel the function, do the above operation again.

To select the locking linked with the vehicle speed:

1. Close all doors and turn the ignition switch to the “ON” position.
2. Shift the selector lever from “P” to the “N” position.
3. Within 10 seconds of turning the ignition switch to the “ON” position, press and hold the driver’s side power door lock switch in the lock position for 5 seconds and then release.

   The doors will be locked and unlocked to indicate that the function is set.

To cancel the function, do the above operation again.

AUTOMATIC DOOR UNLOCKING

You can select the following functions:

- **Unlocking linked with the ignition switch**

  All doors are automatically unlocked when the driver’s door is opened within 10 seconds after the ignition switch is turned to the “ACC” or “LOCK” position, or the key is removed.

- **Unlocking linked with the shift position**

  All doors are automatically unlocked when the selector lever is moved to “P” position. This function is the default setting for new vehicles.

You can set or cancel the automatic door unlocking functions:

Be sure to apply the parking brake when performing the following operations.

To select the unlocking linked with the ignition switch:

1. Close all doors and turn the ignition switch to the “ON” position.
2. Shift the selector lever from “P” to the “N” position.
3. Within 10 seconds of turning the ignition switch to the “ON” position, press and hold the driver’s side power door lock switch in the unlock position for 5 seconds and then release.

   The doors will be locked and unlocked to indicate that the function is set.

To cancel the function, do the above operation again.

To select the unlocking linked with the shift position:

1. Close all doors and turn the ignition switch to the “ON” position.
2. Shift the selector lever to the “P” position.
3. Within 10 seconds of turning the ignition switch to the “ON” position, press and hold the driver’s side power door lock switch in the unlock position for 5 seconds and then release.

   The doors will be locked and unlocked to indicate that the function is set.

To cancel the function, do the above operation again.

Power windows

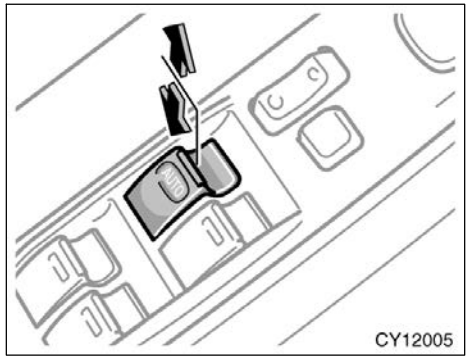

The windows can be operated with the switch on each side door.

The power windows work when the ignition switch is in the “ON” position.

Key off operation: If both front doors are closed, all the power windows work for 43 seconds even after the ignition switch is turned off. It stops working when either front door is opened.

The indicator light (“AUTO”) on the switch tells you the switch can be operated.

OPERATING THE DRIVER’S WINDOW

Use the switch on the driver’s door.

Normal operation: The window moves as long as you hold the switch.

To open: Lightly push down the switch.
To close: Lightly pull up the switch.

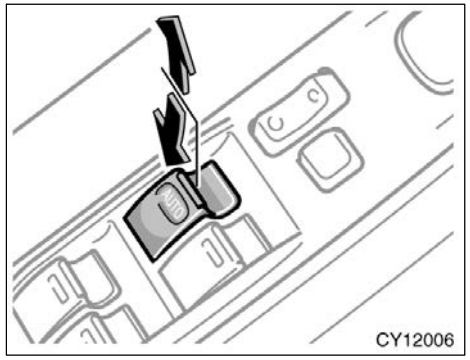

Automatic operation: Push the switch completely down or pull it completely up, and then release it. The window will fully open or close. To stop the window partway, lightly move the switch in the opposite direction and then release it.

Jam protection function: During automatic closing operation or key off closing operation, the window stops and opens half way if something gets caught between the window and window frame.

If the window receives a strong impact, this function may work even if nothing is caught.

If the battery is disconnected or run down, the power window may not operate automatically and the jam protection function will not function correctly after you reconnect, replace or recharge the battery. In any of these cases, you should normalize the power window.

To normalize the power window:

1. Push down the power window switch and lower the window halfway.
2. Pull up the switch until the window closes and hold the switch for a second.

Make sure that the window opens and closes automatically. If the power window cannot be operated properly, have it checked by your Toyota dealer.

⚠ CAUTION

- **Never try jamming any part of your body to activate the jam protection function intentionally.**
- **The jam protection function may not work if something gets caught just before the window is fully closed.**

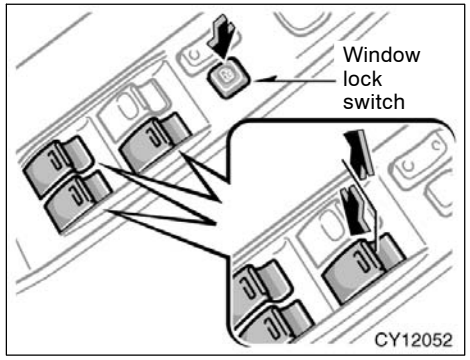

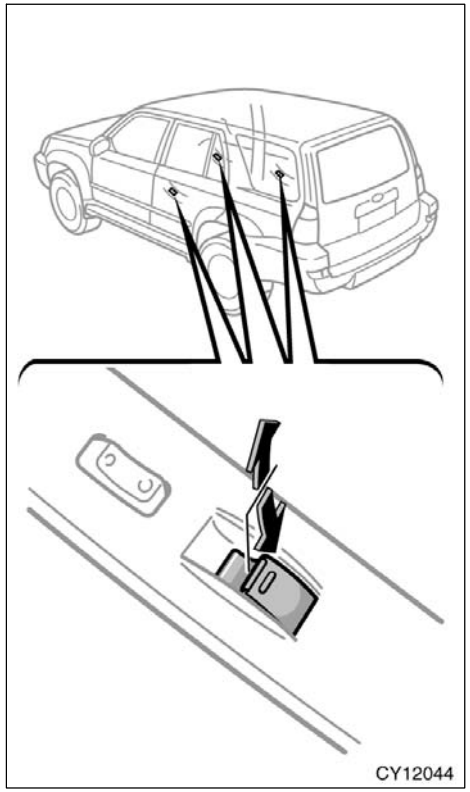

OPERATING THE PASSENGERS’ WINDOWS

Use the switch on each passenger’s door or the switches on the driver’s door that control each passenger’s window.

The window moves as long as you hold the switch.

To open: Push down the switch.
To close: Pull up the switch.

If you push in the window lock switch on the driver’s door, the passengers’ windows cannot be operated.

⚠ CAUTION

To avoid serious personal injury, you must do the following.

- **Before you close the power windows, always make sure there is nobody around the power windows. You must also make sure the heads, hands and other parts of the bodies of all occupants are kept completely inside the vehicle. If someone’s neck, head or hands get caught in a closing window, it could result in death or serious injury. When anyone closes the power windows, make sure he or she operates the windows safely.**
- **When small children are in the vehicle, never let them use the power window switches without supervision. Use the window lock switch to prevent them from making unexpected use of the switches.**
- **Be sure to remove the ignition key when you leave your vehicle.**
- **Never leave anyone (particularly a small child) alone in your vehicle, especially with the ignition key still inserted. Otherwise, he/she could use the power window switches and get trapped in a window. Unattended person (particularly a small child) can be involved in a serious accident.**

Power back window

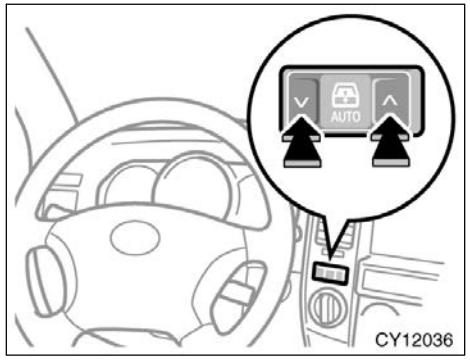

The back window can be operated with the switch on the instrument panel or the key operation in the back door keyhole.

The power back window works when the ignition switch is in the “ON” position.

You can open the back window when the back window wiper is working. At that time, the wiper stops working until the window is closed again.

If the back window is not fully closed, the back window wiper, washer and defogger will not work. (See “Back window wiper and washer” on page 138 and “Back window and outside rear view mirror defoggers” on page 139 in Section 1–5.)

If the battery is disconnected or run down, the power back window may not operate automatically and the jam protection function will not function correctly after you reconnect, replace or recharge the battery. In any of these cases, you should normalize the power back window with the power back window switch.

To normalize the power back window:

1. Push the “∨” (down) switch and lower the window halfway.
2. Push the “∧” (up) switch until the window closes and hold the switch for a second.

Make sure that the window opens and closes automatically. If the power back window cannot be operated properly, have it checked by your Toyota dealer.

OPERATING FROM INSIDE

The ignition key must be in the “ON” position.

Normal operation: To open or close the back window, quickly push and release the “∨” (down) or “∧” (up) switch.

Automatic operation: To open or close the back window, push and hold the “∨” (down) or “∧” (up) switch. The window will fully open or close. To stop the window partway, push the switch on either the “∨” (down) or “∧” (up) side briefly.

Key off operation: If both front doors are closed, it works for 43 seconds even after the ignition switch is turned off. It stops working when either front door is opened.

Jam protection function: During automatic closing operation or key off closing operation, the window stops and opens half way if something gets caught between the window and window frame.

If the window receives a strong impact, this function may work even if nothing is caught.

⚠ CAUTION

- **Never try jamming any part of your body to activate the jam protection function intentionally.**
- **The jam protection function may not work if something gets caught just before the window is fully closed.**

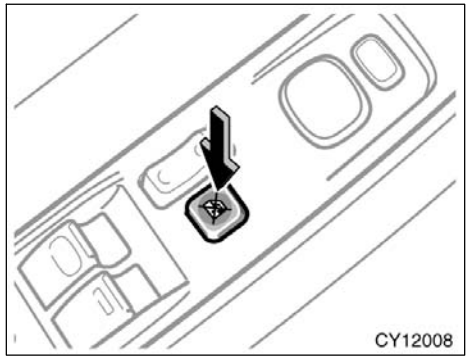

If you push in the window lock switch on the driver’s door, the back window cannot be operated.

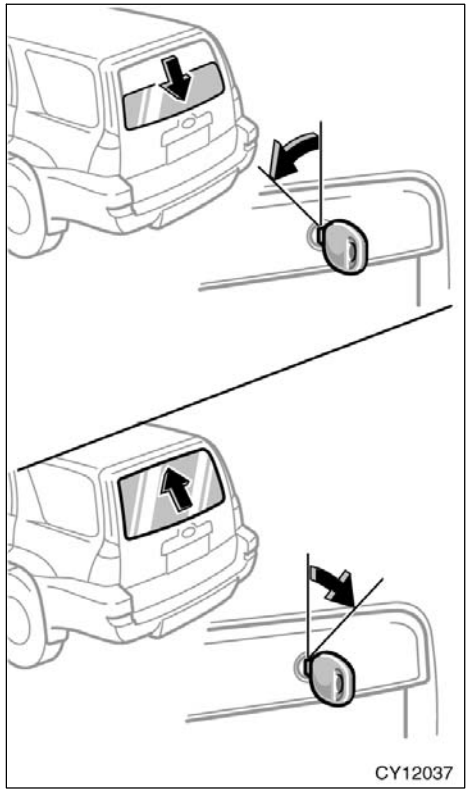

OPERATING FROM OUTSIDE

The back window can be opened and closed with the key operation in the back door keyhole.

To open: Turn the key fully counterclockwise and hold it.

After the door is unlocked, the window begins to open. To stop the window partway, release the key.

To close: Turn the key fully clockwise and hold it.

After the door is locked, the window begins to close. To stop the window partway, release the key.

This door key linked function can be disabled. For details, contact your Toyota dealer.

Jam protection function: During closing operation, the window stops and opens half way if something gets caught between the window and window frame.

If the window receives a strong impact, this function may work even if nothing is caught.

⚠ CAUTION

To avoid serious personal injury, you must do the following.

- **Before you close the power back window, always make sure there is nobody around the power back window. You must also make sure the heads, hands and other parts of the bodies of all occupants are kept completely inside the vehicle. If someone’s neck, head or hands get caught in a closing window, it could result in death or serious injury. When anyone closes the power back window, make sure he or she operates the window safely.**
- **When small children are in the vehicle, never let them use the power back window switch without supervision. Use the window lock switch to prevent them from making unexpected use of the switch.**
- **Be sure to remove the ignition key when you leave your vehicle.**
- **Never leave anyone (particularly a small child) alone in your vehicle, especially with the ignition key still inserted. Otherwise, he/she could use the power back window switch and get trapped in a window. Unattended person (particularly a small child) can be involved in a serious accident.**
- **Keep the back window closed while driving. This not only keeps the luggage from being thrown out but also prevents exhaust gases from entering the vehicle.**
- **Never try jamming any part of your body to activate the jam protection function intentionally.**
- **The jam protection function may not work if something gets caught just before the window is fully closed.**

To open the back window with the wireless remote control transmitter, see “—Opening back window” on page 18 in this Section.

Back door

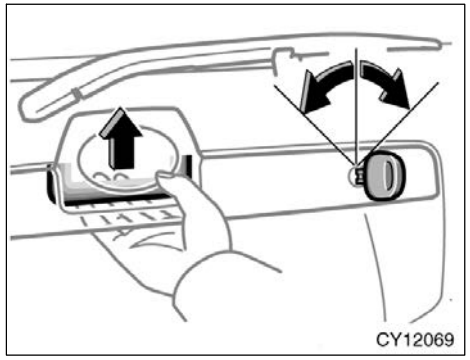

To open the back door, push up the back door opener.

The back door can be opened when the vehicle is stopped.

If the back door opener does not operate except when the battery is disconnected or run down, contact your Toyota dealer.

If the battery is disconnected or run down, the back door does not open after you reconnect, replace or recharge the battery. In any of these cases, you should normalize the back door.

To normalize the back door, unlock it with the key, remote control transmitter or power door lock switch, see “—Locking and unlocking doors” on page 16 and “Side doors” on page 22 in this Section.

Make sure that the back door opens. If the back door cannot be opened properly, have it checked by your Toyota dealer.

The back door can be locked or unlocked in the following ways.

- All the side doors and back door lock and unlock simultaneously with the back door. Insert the key into the keyhole, turn it clockwise to lock and turn it counterclockwise to unlock.
- Operate the power door lock switch. (See “Side doors” on page 22 in this Section.)
- Operate the wireless remote control. (See “—Locking and unlocking doors” on page 16 in this Section.)
- All the side doors and back door are locked and unlocked simultaneously with the driver’s door. (See “Side doors” on page 22 in this Section.)

If the battery terminal is disconnected and reconnected, the back door will be automatically locked. Be careful not to lock your keys in the vehicle.

When all the side doors and back door are unlocked simultaneously with a key, the interior light, luggage compartment light, ignition switch light and running board lights (on some models) will come on and remain on for about 15 seconds before fading out. (For details, see “Interior light” on page 134, “Luggage compartment light” on page 135, “Ignition switch light” on page 136 and “Running board lights” on page 137 in Section 1–5.)

The back window can be opened and closed with the key operation in the back door keyhole. (For details, see “Power back window” on page 30 in this Section.)

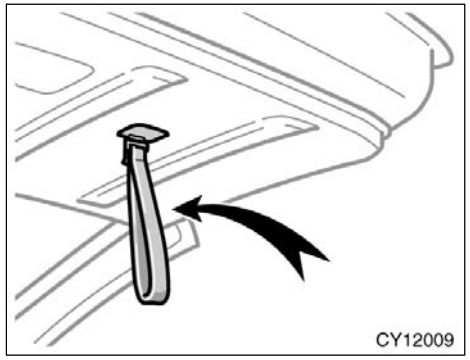

When closing the back door, the inside strap can be used to make the reach easier.

To close the back door, lower it and press down on it. After closing the back door, try pulling it up to make sure it is securely closed.

Back door closer: When the back door has not been fully closed, it is automatically closed completely.

See “—Stowage precautions” on page 305 in Section 2 for precautions when loading luggage.

⚠ CAUTION

- **Keep the back window and back door closed while driving. This not only keeps the luggage from being thrown out but also prevents exhaust gases from entering the vehicle.**
- **Careful attention is needed so as not to get your fingers trapped as the back door automatically closes when it has not been fully closed.**
- **Never allow a child to operate the back door.**

NOTICE

- ***To avoid damage to the back door dampers, do not apply any force, paint or let any other foreign matter on them.***
- ***Do not apply excessive force when the back door closer is operating. Otherwise, the back door closer may become defective.***

Hood

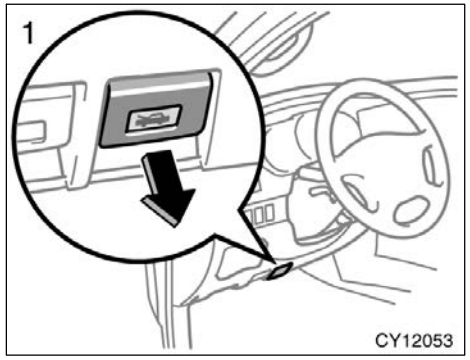

To open the hood:

1. **Pull the hood lock release lever. The hood will spring up slightly.**

⚠ CAUTION

Before driving, be sure that the hood is closed and securely locked. Otherwise, the hood may open unexpectedly while driving and an accident may occur.

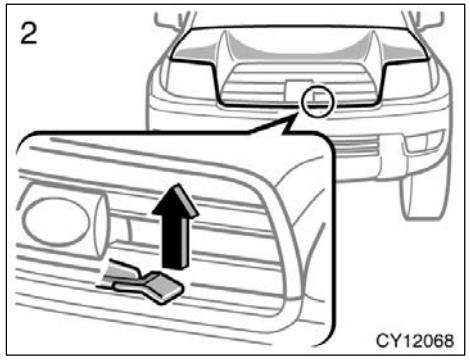

2. **In front of the vehicle, pull up the auxiliary catch lever and lift the hood.**

Before closing the hood, check to see that you have not forgotten any tools, rags, etc. Then lower the hood and make sure it locks into place. If necessary, press down gently on the front edge to lock it.

Theft deterrent system

To deter vehicle theft, the system is designed to sound an alarm if any of the side doors, back door or hood is forcibly unlocked or opened or the battery terminal is disconnected and then reconnected when the vehicle is locked.

The alarm blows the horn intermittently and flashes the headlights, tail lights and turn signal lights, and turns on the interior and luggage compartment lights.

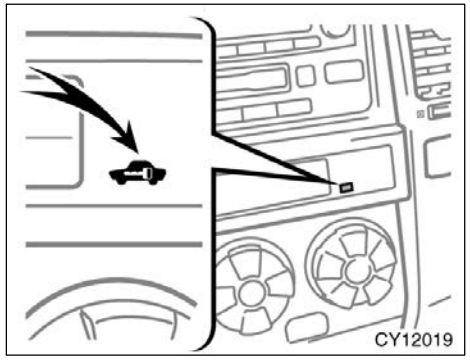

SETTING THE SYSTEM

1. Turn the ignition key to the “LOCK” position and remove it.

The indicator light will start flashing when the key is removed from the ignition switch. (See “Engine immobilizer system” on page 14 in this Section for details.)

2. Have all passengers get out of the vehicle.
3. Close and lock all the side doors, back door and hood.

The indicator light will remain on when all the side doors, back door and hood are closed and locked.

The system will automatically be set after 30 seconds. When the system is set, the indicator light will start flashing again.

4. After making sure the indicator light starts flashing, you may leave the vehicle.

Never leave anyone in the vehicle when you set the system, because unlocking from the inside will activate the system.

CANCELING THE SYSTEM

The system will cancel under the any of the following conditions:

- Any of the side doors, back door or hood is opened.
- Any of the side doors or the back door is unlocked.
- The key is inserted into the ignition.
- The battery terminal is reconnected.

WHEN THE SYSTEM IS SET

Activating the system

The system will sound the alarm under the following conditions:

- If any of the side doors is unlocked or opened without the key or wireless remote control transmitter, or if the back door or hood is forcibly opened.

- If the battery terminal is disconnected and then reconnected.
- If the ignition is hotwired.

The indicator light will come on when the system is activated.

If the alarm has been activated and the key is not in the ignition switch, all the side doors and back door will re–lock automatically.

After one minute, the alarm will automatically stop and the indicator light will starts flashing again.

Reactivating the alarm

Once set, the system automatically resets the alarm after the alarm stops.

The alarm will activate again under the same circumstances described in “Activating the system”.

Stopping the alarm

The alarm will be stopped by the following these ways:

- Unlock any of the side doors or the back door with the key or wireless remote control transmitter.
- Turn the ignition key from the “LOCK” to “ON” position.

These ways cancel the system at the same time.

If the battery becomes discharged due to the vehicle being unused for a long time, etc., when the battery is recharged or replaced, the system will give the alarm. If this happens, immediately unlock any of the side doors or the back door with the key or the wireless remote control transmitter, and the alarm will stop.

TESTING THE SYSTEM

1. Open all the windows.
2. Set the system as described above. The side doors and back door should be locked with the key or wireless remote control transmitter. Be sure to wait until the indicator light goes off or starts flashing.
3. Unlock any side door from the inside. The system should activate the alarm.
4. Stop the alarm as described above.
5. Repeat this operation for the other doors and hood. When testing the hood, also check that the system is activated when the battery terminal is disconnected and then reconnected.

If the system does not work properly, have it checked by your Toyota dealer.

Fuel tank cap

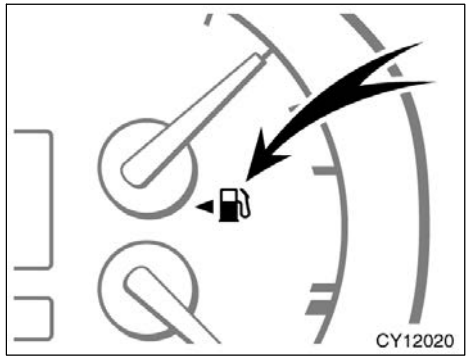

This indicates that the fuel filler door is on the left side of your vehicle.

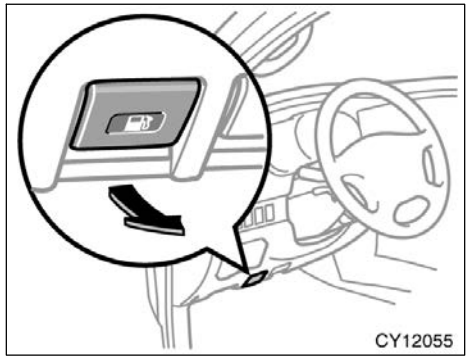

1. **To open the fuel filler door, pull the lever.**

   When refueling, turn off the engine.

⚠ CAUTION

- **Do not smoke, cause sparks or allow open flames when refueling. The fumes are flammable.**
- **When opening the cap, do not remove the cap quickly. In hot weather, fuel under pressure could cause injury by spraying out of the filler neck if the cap is suddenly removed.**

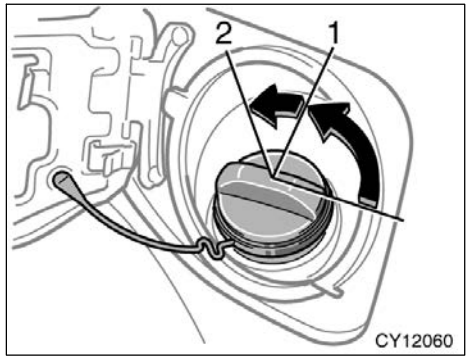

2. **To remove the fuel tank cap, turn the cap counterclockwise by 90 degrees (to the pressure point 1), and then turn it an additional 30 degrees (to point 2). Pause slightly before removing it.**

It is not unusual to hear a slight swoosh when the cap is opened.

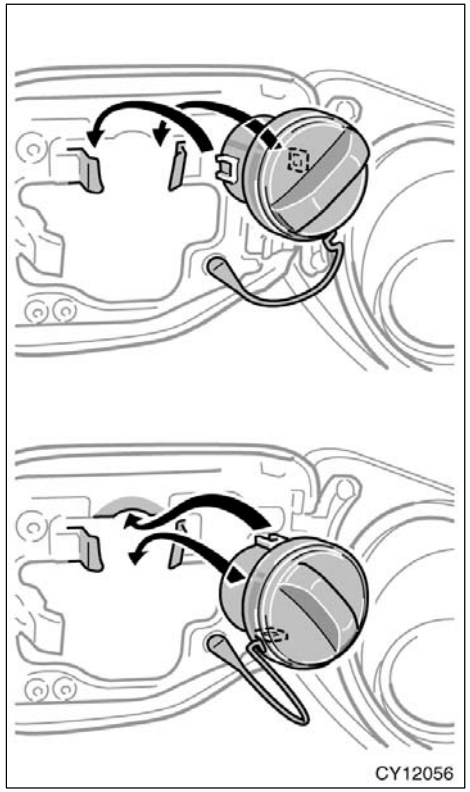

3. The removed cap can be stored on the back side of the fuel filler door.

Position the cap so that the hooks point to the left and right or up and down, and set it in the receptacle on the back side of the door.

When installing the cap, turn the cap clockwise until you hear a click. When you hear the click, the cap is fully closed.

If the cap is not installed securely, the malfunction indicator lamp comes on. Make sure the cap is tightened securely.

The indicator lamp goes off after driving several times. If the indicator lamp does not go off, contact your Toyota dealer as soon as possible.

⚠ CAUTION

- **Make sure the cap is installed securely to prevent fuel spillage in the event of an accident.**
- **Use only a genuine Toyota fuel tank cap for replacement. It is designed to regulate fuel tank pressure.**

NOTICE

To prevent damage to the cap, apply force only in the turning direction to the cap. Do not pull or pry it.

Electric moon roof

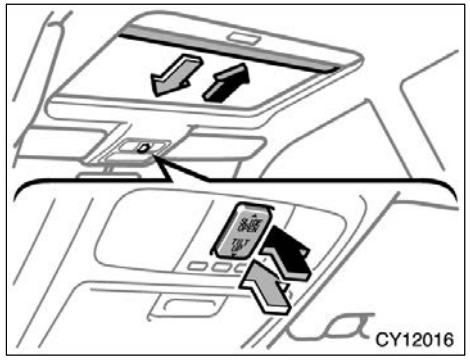

Sliding operation

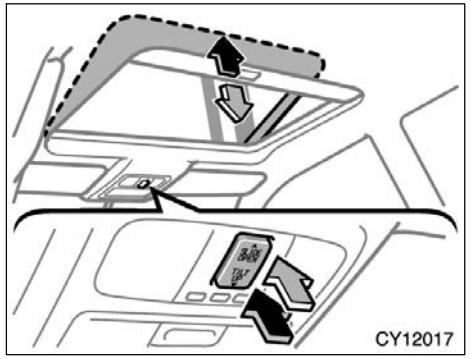

Tilting operation

To operate the moon roof, use the switch beside the personal lights.

The moon roof works when the ignition switch is in the “ON” position.

The sun shade can be opened or closed by hand.

Sliding operation—

To open: Push the switch on the “SLIDE OPEN” side.

The roof will fully open automatically. To stop the roof partway, push the switch on either the “SLIDE OPEN” or “TILT UP” side quickly.

When you quickly push and release the switch, the moon roof will open while the switch is being pushed and stop when released.

The sun shade will be opened together with the roof.

When the moon roof is opened fully, the deflector will raise to reduce the entering of the strong wind. The angle of the deflector will be adjusted according to the vehicle speed.

To close: Push the switch on the “TILT UP” side.

The roof will fully close automatically. To stop the roof partway, push the switch on either the “SLIDE OPEN” or “TILT UP” side quickly.

When you quickly push and release the switch, the moon roof will close while the switch is being pushed and stop when released.

Tilting operation—

To tilt up: Push the switch on the “TILT UP” side.

The roof will fully tilt up automatically. To stop the roof partway, push the switch on either the “SLIDE OPEN” or “TILT UP” side quickly.

When you quickly push and release the switch, the moon roof will tilt up while the switch is being pushed and stop when released.

To tilt down: Push the switch on the “SLIDE OPEN” side.

The roof will fully tilt down automatically. To stop the roof partway, push the switch on either the “SLIDE OPEN” or “TILT UP” side quickly.

When you quickly push and release the switch, the moon roof will tilt down while the switch is being pushed and stop when released.

Key off operation: If both front doors are closed, it works for 43 seconds even after the ignition switch is turned off. It stops working when either front door is opened.

Jam protection function:

- If something gets caught between the moon roof and frame during slide closing operation, the moon roof stops and opens half way, and the deflector stops and raises fully.
- If something gets caught between the moon roof and frame during tilting down operation, the moon roof stops and opens fully.

If the moon roof receives a strong impact, this function may work even if nothing is caught.

If the battery is disconnected or run down, the moon roof may not operate automatically and the jam protection function will not function correctly after you reconnect, replace or recharge the battery. In any of these cases, you should normalize the moon roof.

To normalize the moon roof, push and hold the switch on the “TILT UP” side until the moon roof tilts all the way up and then tilts down a little automatically.

Make sure that the moon roof opens and closes automatically. If the moon roof cannot be operated properly, have it checked by your Toyota dealer.

⚠ CAUTION

To avoid serious personal injury, you must do the following.

- **While the vehicle is moving, always keep the heads, hands and other parts of the bodies of all occupants away from the roof opening. Otherwise, they could be seriously injured if the vehicle stops suddenly or if the vehicle is involved in an accident.**
- **Before you close the moon roof, always make sure there is nobody around the moon roof. You must also make sure nobody places his or her head, hands and other parts of the body in the roof opening. If someone’s neck, head or hands get caught in the closing roof, it could result in death or serious injury. When anyone closes the moon roof, first make sure it is safe to do so.**
- **Be sure to remove the ignition key when you leave your vehicle.**
- **Never leave anyone (particularly a small child) alone in your vehicle, especially with the ignition key still inserted. Otherwise, he/she could use the moon roof switch and get trapped in the roof opening. Unattended person (particularly a small child) can be involved in a serious accident.**
- **Never sit on top of the vehicle around the roof opening.**
- **Never try jamming any part of your body to activate the jam protection function intentionally.**
- **The jam protection function may not work if something gets caught just before the moon roof is fully closed.**

SECTION 1–3

OPERATION OF INSTRUMENTS AND CONTROLS

Occupant restraint systems

Seats 42
Front seats 42
Rear seats 48
Head restraints 60
Armrest 61
Seat heaters 62
Seat belts 63
SRS airbags 73
Roll sensing of curtain shield airbags off switch 94
Child restraint 95

Seats

While the vehicle is being driven, all vehicle occupants should have the seatback upright, sit well back in the seat and properly wear the seat belts provided.

CAUTION

- **Do not drive the vehicle unless the occupants are properly seated. Do not allow any passengers to sit on top of a folded−down seatback, or in the luggage compartment or cargo area. Persons not properly seated and/or not properly restrained by seat belts can be severely injured in the event of emergency braking or a collision.**
- **During driving, do not allow any passengers to stand up or move around between seats. Otherwise, severe injuries can occur in the event of emergency braking or a collision.**

Front seats—
—Front seat precautions

Driver seat

CAUTION

The SRS driver airbag deploys with considerable force, and can cause death or serious injury especially if the driver is very close to the airbag. The National Highway Traffic Safety Administration (“NHTSA”) advises:

Since the risk zone for driver airbag is the first 50—75 mm (2—3 in.) of inflation, placing yourself 250 mm (10 in.) from your driver airbag provides you with a clear margin of safety. This distance is measured from the center of the steering wheel to your breastbone. If you sit less than 250 mm (10 in.) away now, you can change your driving position in several ways:

- **Move your seat to the rear as far as you can while still reaching the pedals comfortably.**
- **Slightly recline the back of the seat. Although vehicle designs vary, many drivers can achieve the 250 mm (10 in.) distance, even with the driver seat all the way forward, simply by reclining the back of the seat somewhat. If reclining the back of your seat makes it hard to see the road, raise yourself by using a firm, non−slippery cushion, or raise the seat if your vehicle has that feature.**
- **If your steering wheel is adjustable, tilt it downward. This points the airbag toward your chest instead of your head and neck.**

The seat should be adjusted as recommended by NHTSA above, while still maintaining control of the foot pedals, steering wheel, and your view of the instrument panel controls.

Front passenger seat

CAUTION

The SRS front passenger airbag also deploys with considerable force, and can cause death or serious injury especially if the front passenger is very close to the airbag. The front passenger seat should be as far from the airbag as possible with the seatback adjusted, so the front passenger sits upright.

Front seats (with SRS side airbags)

CAUTION

The SRS side airbags are installed in the driver and front passenger seats. Observe the following precautions.

- **Do not lean against the front door when the vehicle is in use, since the side airbag inflates with considerable speed and force. Otherwise, you may be killed or seriously injured.**
- **Do not use seat accessories which cover the area where the side airbags inflate. Such accessories may prevent the side airbags from activating correctly, causing death or serious injury.**
- **Do not modify or replace the seats or upholstery of the seats with side airbags. Such change may prevent the side airbag system from activating correctly, disable the system or cause the side airbags to inflate accidentally, resulting in death or serious injury.**

—Seat adjustment precautions

CAUTION

- **Do not adjust the seat while the vehicle is moving as the seat may unexpectedly move and cause the driver to lose control of the vehicle.**
- **Be careful that the seat does not hit a passenger or luggage.**
- **After adjusting the seat position, release the lever and try sliding the seat forward and backward to make sure it is locked in position.**
- **After adjusting the seatback, push your body back against the seat to make sure the seat is locked in position.**
- **Do not put objects under the seats. Otherwise, the objects may interfere with the seat−lock mechanism or unexpectedly push up the seat position adjusting lever and the seat may suddenly move, causing the driver to lose control of the vehicle.**

—Adjusting front seats (manual seat)

- **While adjusting the seat, do not put your hands under the seat or near the moving parts. Otherwise, your hands or fingers may be caught and injured.**

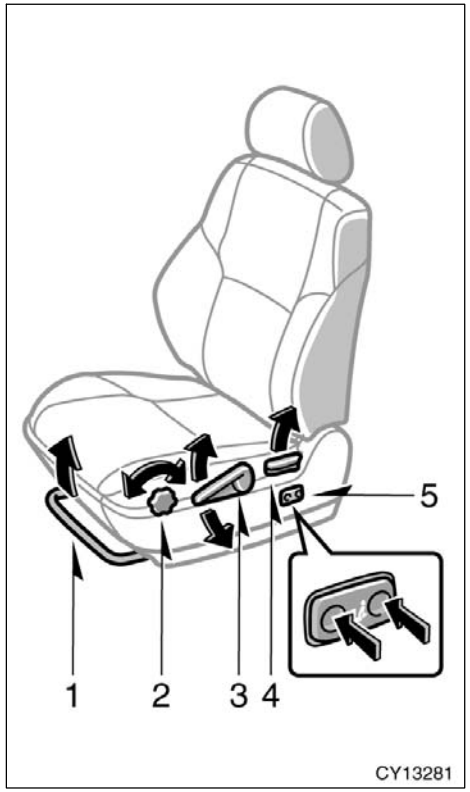

1. SEAT POSITION ADJUSTING LEVER

Hold the center of the lever and pull it up. Then slide the seat to the desired position with slight body pressure and release the lever.

2. SEAT CUSHION ANGLE ADJUSTING KNOB

To change the angle of the seat cushion on the front side, turn the knob either way.

3. SEAT HEIGHT ADJUSTING LEVER

To change the height of the seat, pull up or push down the lever.

4. SEATBACK ANGLE ADJUSTING LEVER

Lean forward and pull the lever up. Then lean back to the desired angle and release the lever.

CAUTION

Avoid reclining the seatback any more than needed. The seat belts provide maximum protection in a frontal or rear collision when the driver and the front passenger are sitting up straight and well back in the seats. If you are reclined, the lap belt may slide past your hips and apply restraint forces directly to the abdomen or your neck may contact the shoulder belt. In the event of a frontal collision, the more the seat is reclined, the greater the risk of death or personal injury.

5. SEAT LUMBAR SUPPORT ADJUSTING SWITCH

Push the control switch on either side.

The amount of lumbar support will change while the switch is pushed.

—Adjusting front seats (power seat)

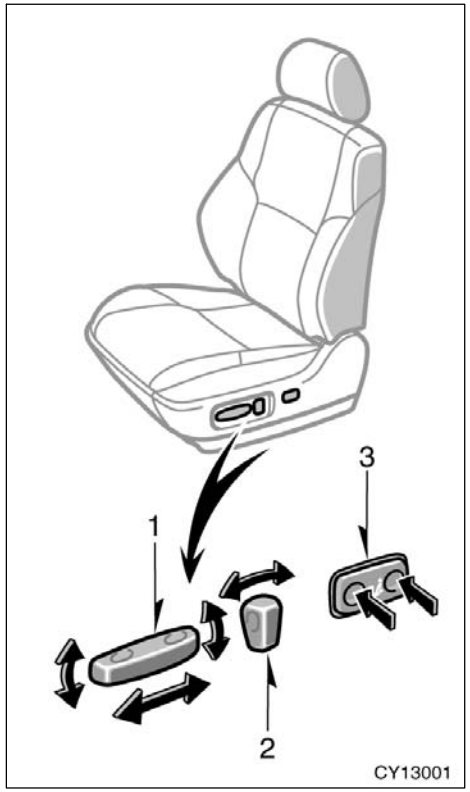

1. DRIVER’S SEAT: SEAT POSITION, SEAT CUSHION ANGLE AND SEAT HEIGHT ADJUSTING SWITCH

PASSENGER’S SEAT: SEAT POSITION ADJUSTING SWITCH

Move the control switch in the desired direction.

Releasing the switch will stop the seat at that position.

Do not place anything under the front seats, as this might interfere with the seat movement.

2. SEATBACK ANGLE ADJUSTING SWITCH

Move the control switch in the desired direction.

Releasing the switch will stop the seatback at that position.

CAUTION

Avoid reclining the seatback any more than needed. The seat belts provide maximum protection in a frontal or rear collision when the driver and the front passenger are sitting up straight and well back in the seats. If you are reclined, the lap belt may slide past your hips and apply restraint forces directly to the abdomen or your neck may contact the shoulder belt. In the event of a frontal collision, the more the seat is reclined, the greater the risk of death or personal injury.

3. SEAT LUMBAR SUPPORT ADJUSTING SWITCH

Push the control switch on either side.

The amount of lumbar support will change while the switch is pushed.

—Flattening seatbacks (manual seat)

1. Remove the head restraint. Hold the center of the lever and pull it up. Then slide the seat further forward than the front−most lock position.

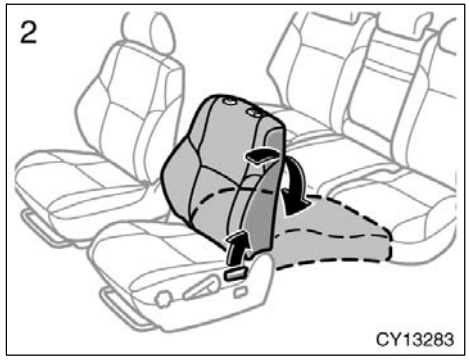

2. Pull the seatback angle adjusting lever to unlock and push down the seatback.

When returning the seatback upright, be careful not to make yourself hit by the seatback which will bound with considerable spring force.

After returning the seat to its original position, be certain to replace the head restraint.

CAUTION

- **Do not allow passengers to ride on the flattened seat while driving; use the seat in the normal position.**
- **After putting back the seat, try pushing the seat and seatback forward and rearward to make sure it is secured in place. Be certain to replace the head restraint.**

—Flattening seatbacks (power seat)

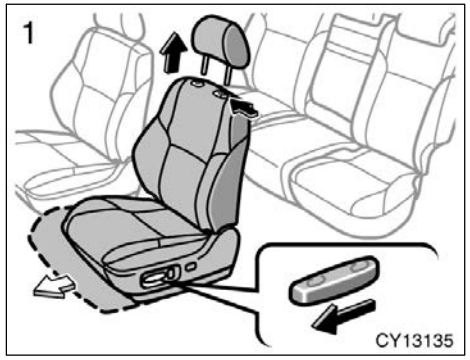

1. **Remove the head restraint. Push the seat position adjusting switch forward to slide the seat further forward than the front−most position.**

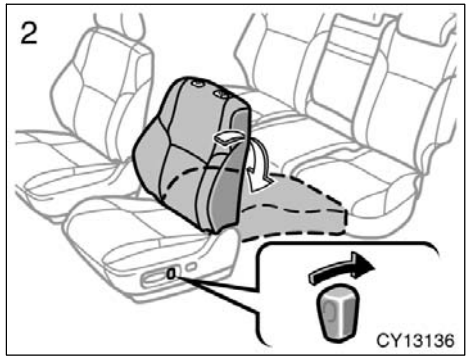

2. **Move the seatback angle adjusting switch backward to flatten the seatback.**

After returning the seat to its original position, be certain to replace the head restraint.

Rear seats—
—Folding down rear seats (vehicles without third seats)

⚠ CAUTION

- **Do not allow passengers to ride on the flattened seat while driving; use the seat in the normal position.**
- **After putting back the seat, try pushing the seat and seatback forward and rearward to make sure it is secured in place. Be certain to replace the head restraint.**

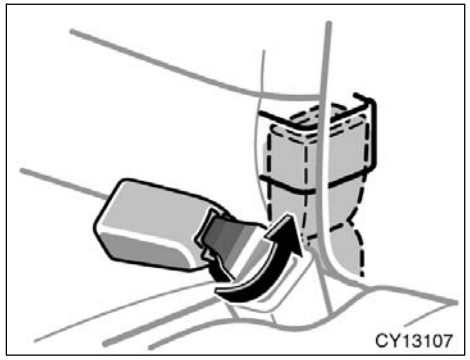

BEFORE FOLDING DOWN REAR SEAT

Stow the rear center seat belt buckle as shown in the illustration.

This prevents the seat belt buckle from falling out when you fold the seatback.

NOTICE

The seat belt buckle must be stowed before you fold the seatback.

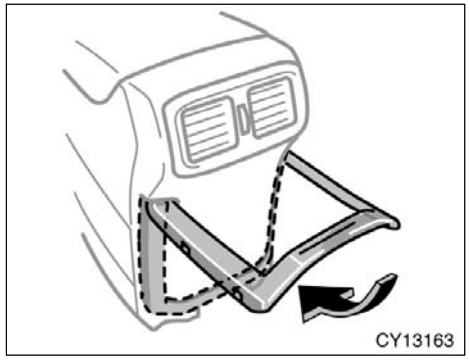

If you are using a trash holder, lower it.

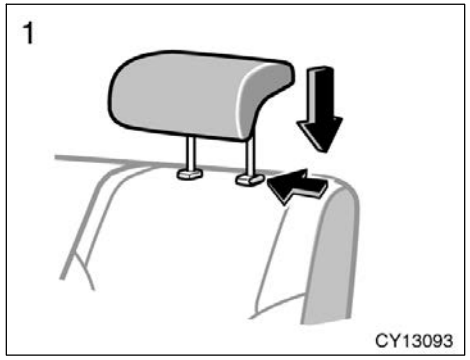

1. Lower the head restraint to the lowest position.

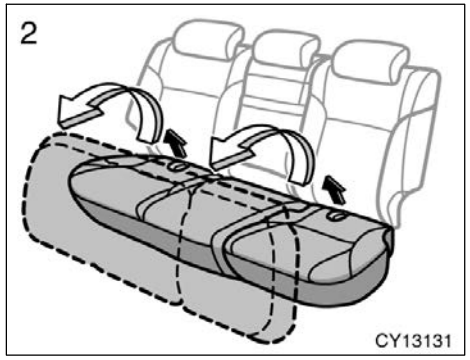

2. Swing the bottom cushion up by pulling the lock release strap.

Each bottom cushion can be swung up separately.

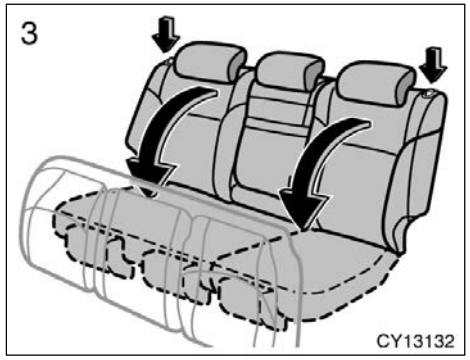

3. Push the lock release button and fold down the seatback.

This will enlarge the luggage compartment as far as the raised seat cushion. See “—Stowage precautions” on page 305 in Section 2 for precautions when loading luggage.

Each seatback can be folded separately.

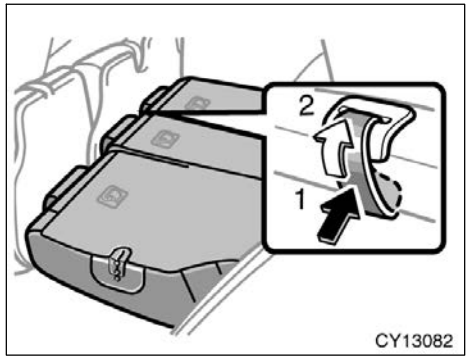

WHEN RETURNING THE SEATBACK

If you cannot raise the seatback because of the locked seat belt, do not try to force it. Release the lock of the seat belt in the following way.

1. Push in the lower front edge of the seatback to slacken the seat belt.
2. Let the seat belt retract a little.

⚠ CAUTION

When returning seats to their original position, observe the following precautions in order to prevent personal injury in a collision or sudden stop:

- **Make sure the seatback is securely locked by pushing forward and rearward on the top of the seatback. Failure to do so will prevent the seat belt from operating properly.**
- **Make sure the seat belts are not twisted or caught in the seatback and are arranged in their proper position and are ready to use.**
- **Make sure the bottom cushion is securely locked by trying to pull up the edge of the cushion near the lock release straps.**
- **Make sure to arrange the buckles of the seat belts in their proper position and be ready to use.**

—Rear seat precautions (vehicles with third seats)

⚠ CAUTION

- **Adjustment should not be made while the vehicle is moving.**
- **When adjusting the seat, be careful not to hit the seat against a passenger or luggage.**
- **After adjusting the seatback, push back your body to make sure it is locked in position.**
- **When returning seats to their original position, observe the following precautions in order to prevent personal injury in a collision or sudden stop:**

  Make sure the seat is securely locked by pushing forward and rearward on the top of the seatback or by trying to pull up the edge of the bottom cushion. Failure to do so will prevent the seat belt from operating properly.

  Make sure the seat belts are not twisted or caught under the seat and are arranged in their proper position and are ready to use.

—Adjusting rear seats (vehicles with third seats)

- **The third seats have a maximum capacity of two belted occupants who do not exceed 150 cm (59 in.) in height. Exceeding these limits can result in increased risk of serious personal injuries or death.**

Folding the seats up will enlarge the luggage compartment. See “—Stowage precautions” on page 305 in Section 2 for precautions when loading luggage.

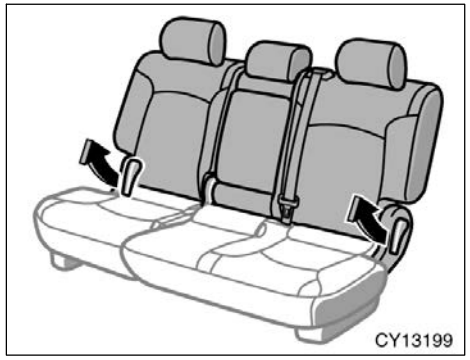

Second seats

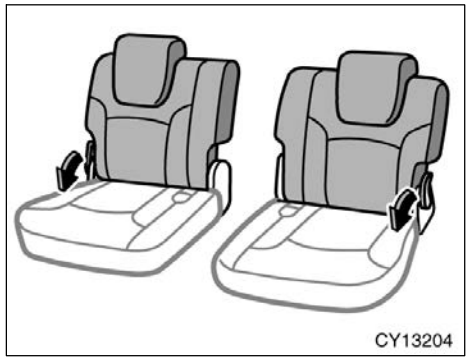

Third seats

SEATBACK ANGLE ADJUSTING LEVER

Lean forward and pull the lock release lever. Then lean back to the desired angle and release the lever.

⚠ CAUTION

Avoid reclining the seatback any more than needed. The seat belts provide maximum protection in a frontal or rear collision when the passengers are sitting up straight and well back in the seats. If you are reclined, the lap belt may slide past your hips and apply restraint forces directly to the abdomen. In the event of a frontal collision, the more the seat is reclined, the greater the risk of death or personal injury.

—Tumbling second seats

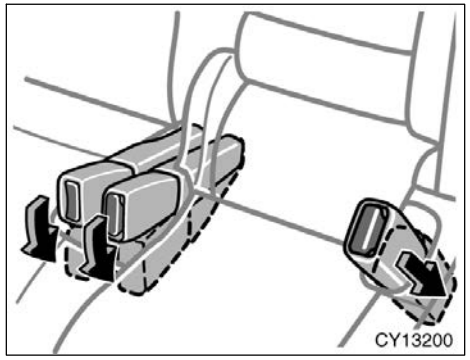

BEFORE TUMBLING SECOND SEATS

Stow the second seat belt buckles as shown in the illustration.

This prevents the buckles from falling out when you tumble the second seat.

NOTICE
The seat belt buckles must be stowed before you tumble the second seat.

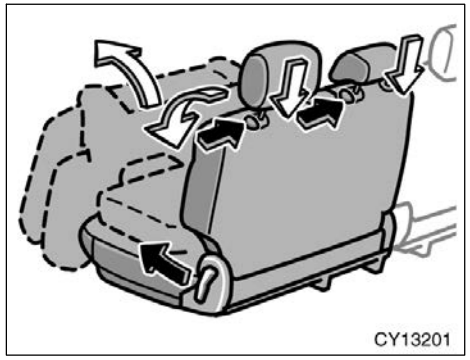

TUMBLING SECOND SEATS

Lower the head restraints to the lowest position. Fold down the seatback while pulling the seatback angle adjusting lever, then swing the whole seat up and forward until they are locked.

Tumbling the second seats will enlarge the floor space for third seat entry. It will also enlarge the luggage compartment when the third seats are not used. See “—Stowage precautions” on page 305 in Section 2 for precautions when loading luggage.

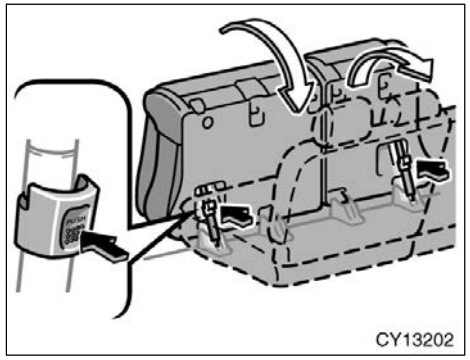

WHEN RETURNING SECOND SEATS

Push the knob to unlock the seat, swing the whole seat down and swing the seatback up.

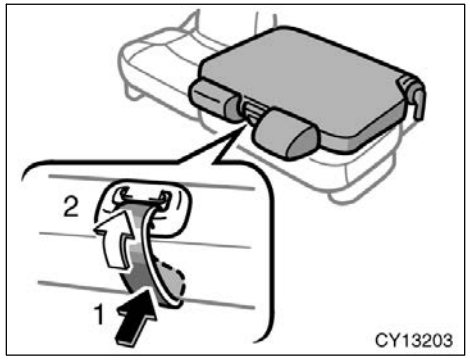

If you cannot raise the seatback because of the locked seat belt, do not try to force it. Release the lock of the seat belt in the following way.

1. Push in the lower front edge of the seatback to slacken the seat belt.
2. Let the seat belt retract a little.

⚠ CAUTION

When tumbling seats or returning seats to their original positions, observe the following to prevent personal injury:

- **Do not tumble or return the seat while the vehicle is moving.**
- **Make sure people or luggage are clear of the seat. Then, hold the seat and slowly move it. Otherwise, people may be injured or luggage may be damaged, if the seat hits them.**
- **Be careful not to get your hands or feet pinched in the seat.**

To prevent personal injury in a collision or sudden stop:

- **Do not sit on or place anything on the folded seatback or tumbled seat while driving.**
- **Make sure the seat is securely locked by pushing forward and rearward on the top of the seatback or by trying to pull up the edge of the bottom cushion. Failure to do so will prevent the seat belt from operating properly.**
- **Make sure the seat belts are not twisted or caught under the seat and are arranged in their proper position and are ready to use.**

—Folding up third seats

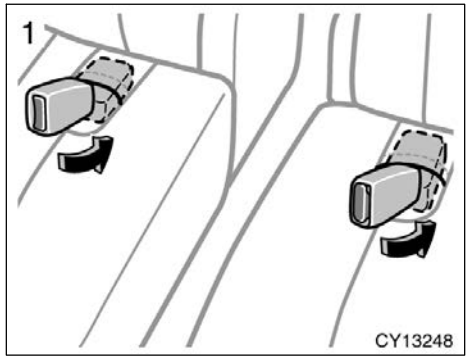

BEFORE FOLDING UP THIRD SEATS

1. **Stow the third seat belt buckles as shown in the illustration.**

This prevents the buckles from falling out when you fold up the third seats.

NOTICE
The seat belt buckles must be stowed before you fold up the third seats.

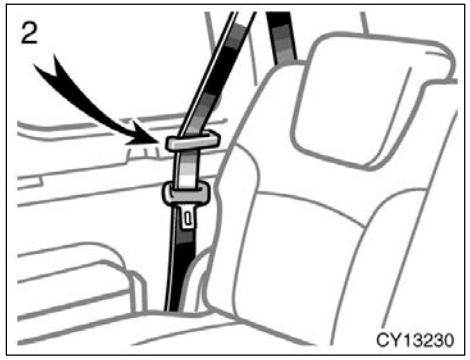

2. **Make sure the shoulder belt passes through the hanger.**

This prevents the shoulder belt from being damaged.

CAUTION
The seat belt must be removed from the hanger when the seat belt is in use.

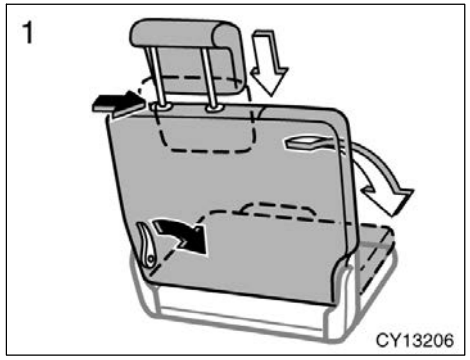

FOLDING UP THIRD SEATS

1. **Lower the head restraint to the lowest position. Fold down the seatback while pushing the seatback angle adjusting lever.**

Folding up the third seats will enlarge the luggage compartment. See “—Stowage precautions” on page 305 in Section 2 for precautions when loading luggage.

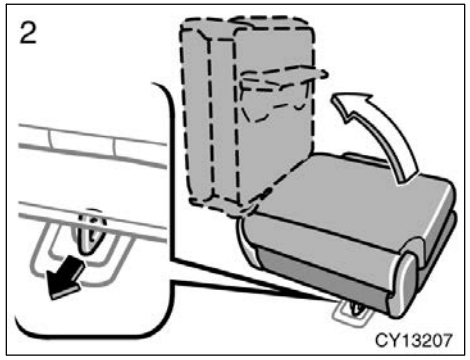

2. Unlock the seat leg by pulling the handle behind the seat, and swing the whole seat up and sideward.

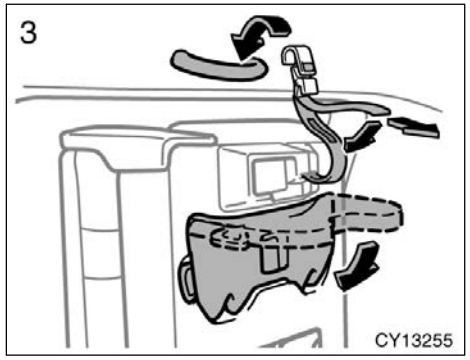

3. Stow the seat leg in the back of the seat cushion. Take the holding strap out of its holder, and attach the strap to the assist grip. Tighten the strap by pulling the end and fix it with Velcro.

⚠ CAUTION

When folding up the third seats, fix the seats securely by adjusting the length of the holding strap. Failure to do so may cause an unexpected injury in the event of emergency braking or collision.

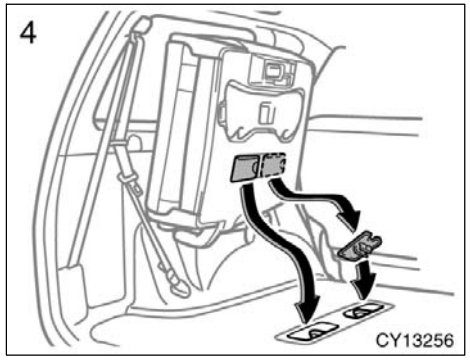

4. Remove the seat anchor covers from the back of the seat cushion, and install them over the seat anchors.

⚠ CAUTION

Be sure to apply the covers on the seat anchors, or you may get burned when they become hot.

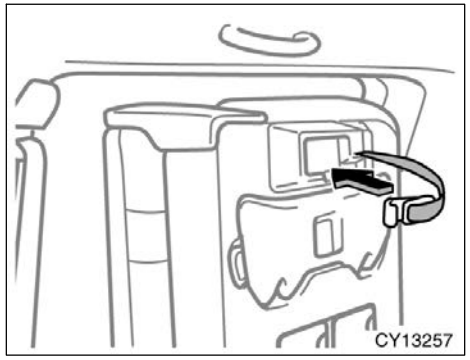

When returning the third seat to its original position, stow the holding strap in the holder in the direction shown above. Then do the above procedures in the reverse order.

⚠ CAUTION

When folding up seats or returning seats to their original positions, observe the following to prevent personal injury:

- **Do not fold up or return the seat while the vehicle is moving.**
- **Be careful not to hit the seat against a person or drop it on yourself.**

To prevent personal injury in a collision or sudden stop:

- **Do not sit on or place anything on the folded seatback while driving.**
- **Make sure the seat is securely locked by pushing forward and rearward on the top of the seatback or by trying to pull up the edge of the bottom cushion. Failure to do so will prevent the seat belt from operating properly.**
- **Make sure the seat belts are not twisted or caught under the seat and are arranged in their proper position and are ready to use.**

—Removing third seats

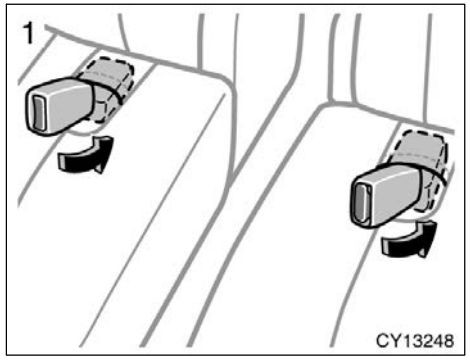

BEFORE REMOVING THIRD SEATS

1. **Stow the third seat belt buckles as shown in the illustration.**

This prevents the buckles from falling out when you remove the third seats.

NOTICE

The seat belt buckles must be stowed before you remove the third seats.

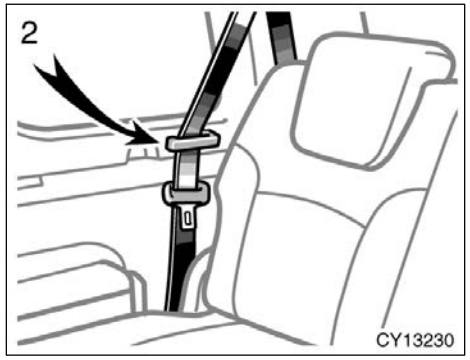

2. Make sure the shoulder belt passes through the hanger.

This prevents the shoulder belt from being damaged.

⚠ CAUTION

The seat belt must be removed from the hanger when the seat belt is in use.

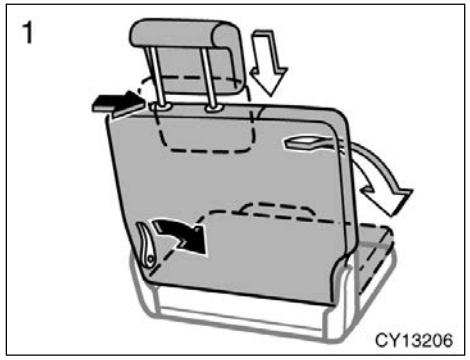

REMOVING THIRD SEATS

1. Lower the head restraint to the lowest position. Fold down the seatback while pushing the seatback angle adjusting lever.

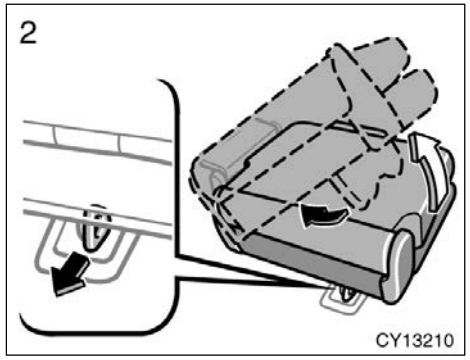

2. Unlock the seat leg by pulling the handle behind the seat, and lift the whole seat up. Retract the seat leg into the back of the seat cushion. Then, place the seat on the floor.

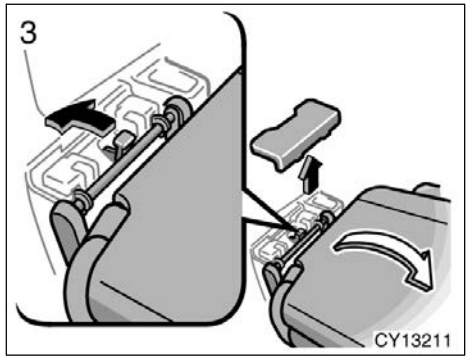

3. Remove the cover and push the seat lock release lever outward to unlock the seat lock, then pull up the whole seat and remove it. After removing the seat, reinstall the cover.

Removing the third seats will enlarge the luggage compartment. See “—Stowage precautions” on page 305 in Section 2 for precautions when loading luggage.

NOTICE

Avoid putting heavy loads on the removed seat. The metallic tips of the seat leg may be damaged and the seat cannot be reinstalled.

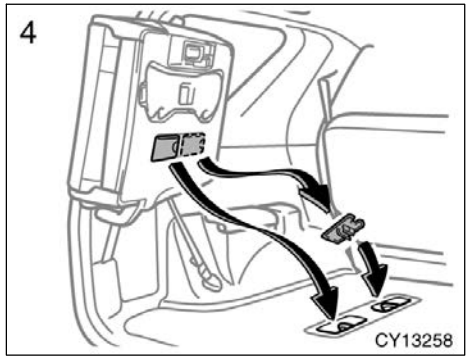

4. Remove the seat anchor covers from the back of the seat cushion, and install them over the seat anchors.

⚠ CAUTION

Be sure to apply the covers on the seat anchors, or you may get burned when they become hot.

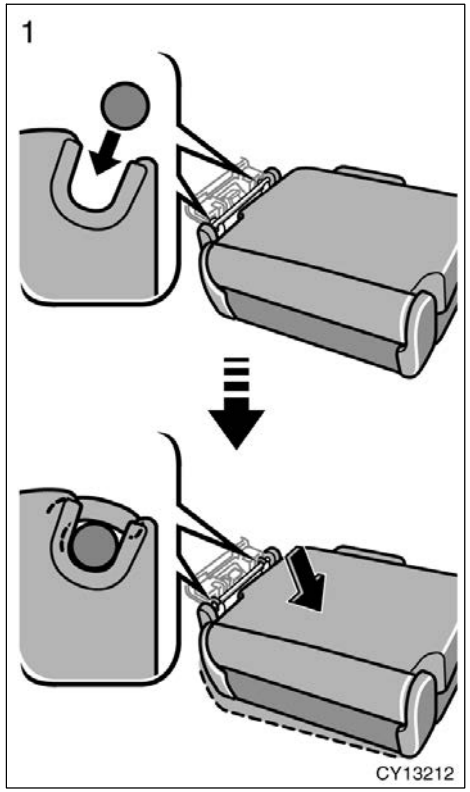

REINSTALLING THIRD SEATS

1. **Remove the seat anchor covers from the floor and install them in the back of the seat cushion. Hold the seat and engage the seat striker to the seat lock, then place the seat on the floor. Press down the seatback to securely lock the seat to the body.**

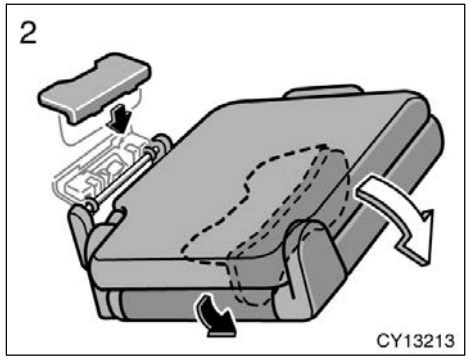

2. **Pull out the seat leg from the back of the seat cushion and lock it on the anchor. Reinstall the cover.**

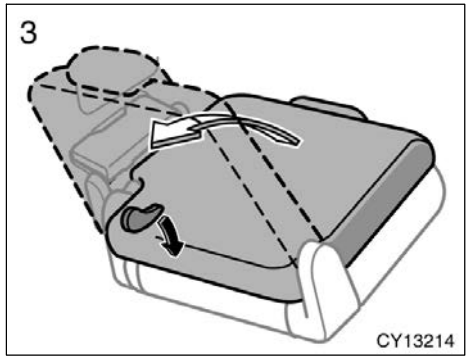

3. **Raise the seatback while pushing down the seatback angle adjusting lever.**

⚠ CAUTION

When removing or reinstalling the seat, observe the following to prevent personal injury:

- **Do not fold or remove the seat while the vehicle is moving.**
- **Be careful not to get your hands or feet pinched in the seat.**
- **Be careful not to hit the removed seat against a person or drop it on yourself.**

- When reinstalling the seat, be careful not to hit the seat against yourself or the vehicle.

To prevent personal injury in a collision or sudden stop:

- Do not sit on or place anything on the folded seatback while driving.
- Do not leave the removed seat unsecured in the vehicle.
- Do not try to sit on or place anything on the removed seat.
- Reinstall each seat in its original position. Failure to do so will prevent third seat occupants from using seat belts properly.
- Make sure the seat is securely locked by pushing forward and rearward on the top of the seatback or by trying to pull up the edge of the bottom cushion. Failure to do so will prevent the seat belt from operating properly.
- Make sure the seat belts are not twisted or caught under the seat and are arranged in their proper position and are ready to use.

Head restraints

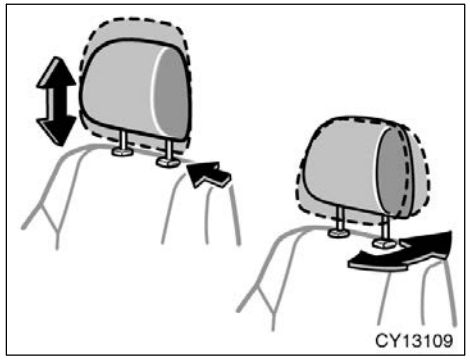

Front seats

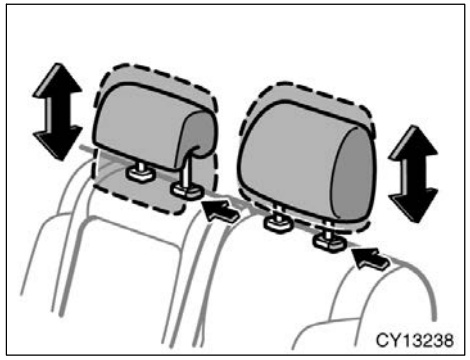

Second seats—vehicles with third seats

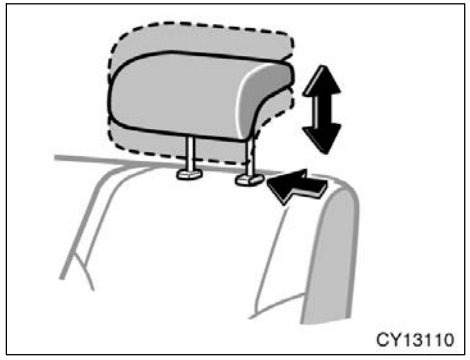

Rear seats—vehicles without third seats

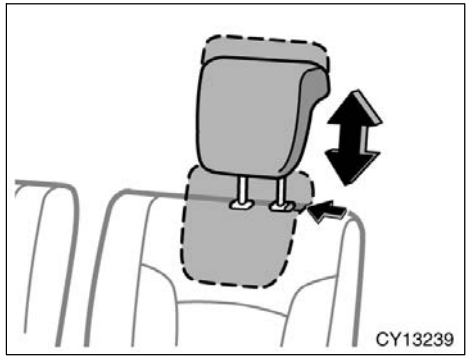

Third seats

For your safety and comfort, adjust the head restraint before driving.

To raise: Pull it up.
To lower: Push it down while pressing the lock release button.

Front head restraints—You can also move the head restraint forward or backward. If such adjustment is desired, pull or push the base of the head restraint.

Rear head restraints (vehicles without third seats) and a second center head restraint (vehicles with third seats)—When an occupant sits on the rear seat (vehicles without third seats) or second center seat (vehicles with third seats), always pull up the rear head restraint to the lock position.

The head restraint is most effective when it is close to your head. Therefore, using a cushion on the seatback is not recommended.

CAUTION

- **Adjust the center of the head restraint so that it is closest to the top of your ears.**
- **After adjusting the head restraint, make sure it is locked in position.**
- **Do not drive with the head restraints removed.**

Armrest

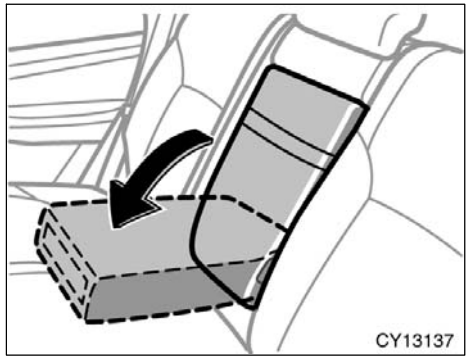

To use the armrest, pull it out as shown above.

This armrest is equipped with cup holders and tray. (For details, see “Rear cup holders and tray” on page 271 or “Rear cup holders” on page 272 in Section 1–10.)

NOTICE

To prevent damage to the armrest, avoid putting heavy loads on it.

Seat heaters

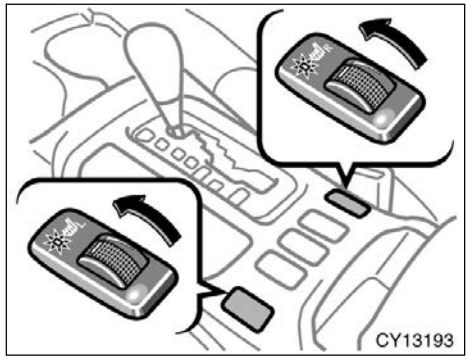

To turn on the seat heater, move the dial forward (“L” dial for the left front seat and “R” dial for the right front seat). At this time, the indicator light will illuminate to indicate the seat heater is operating.

To turn off the seat heater, move the dial backward until it stops.

Move the dial forward or backward to adjust to the desired temperature. When the seat heater is not in use, move the dial fully backward.

The key must be in the “ON” position.

⚠ CAUTION

Occupants must use caution when operating the seat heater because it may make them feel too hot or cause burns at low temperatures (erythema, varicella). Use extra caution for;

- **Babies, small children, elderly persons, sick persons or persons with physical disabilities**
- **Persons who have sensitive skin**
- **Persons who are exhausted**
- **Persons who have taken alcohol or drugs which induce sleep (sleeping drug, cold remedy, etc.)**

To prevent the seat overheating, do not use the seat heater with a blanket, cushion, or other insulating objects which cover the seat.

NOTICE

- ***Do not put unevenly weighed objects on the seat and do not stick sharp objects (needles, nails, etc.) into the seat.***
- ***When cleaning the seats, do not use organic substances (paint thinner, benzine, alcohol, gasoline, etc.). They may damage the heater and seat surface.***
- ***To prevent the battery from being discharged, turn the system off when the engine is not running.***

Seat belts—
—Seat belt precautions

Toyota strongly urges that the driver and passengers in the vehicle be properly restrained at all times with the seat belts provided. Failure to do so could increase the chance of injury and/or the severity of injury in accidents.

The seat belts provided for your vehicle are designed for people of adult size, large enough to properly wear them.

Child. Use a child restraint system appropriate for the child until the child becomes large enough to properly wear the vehicle’s seat belts. See “Child restraint” on page 95 in this Section for details.

If a child is too large for a child restraint system, the child should sit in the rear seat and must be restrained using the vehicle’s seat belt. According to accident statistics, the child is safer when properly restrained in the rear seat than in the front seat.

If a child must sit in the front seat, the seat belts should be worn properly. If an accident occurs and the seat belts are not worn properly, the force of the rapid inflation of the airbag may cause death or serious injury to the child.

Do not allow any children to stand up or kneel on either rear or front seats. An unrestrained child could suffer serious injury or death during emergency braking or a collision. Also, do not let the child sit on your lap. Holding a child in your arms does not provide sufficient restraint.

Pregnant woman. Toyota recommends the use of a seat belt. Ask your doctor for specific recommendations. The lap belt should be worn securely and as low as possible over the hips and not on the waist.

Injured person. Toyota recommends the use of a seat belt. Depending on the injury, first check with your doctor for specific recommendation.

⚠ CAUTION

Persons should ride in their seats properly wearing their seat belts whenever the vehicle is moving. Otherwise, they are much more likely to suffer serious bodily injury or death in the event of sudden braking or a collision.

When using the seat belts, observe the following:

- **Use the belt for only one person at a time. Do not use a single belt for two or more people—even children.**
- **Avoid reclining the seatback any more than needed. The seat belts provide maximum protection in a frontal or rear collision when the driver and the front passenger are sitting up straight and well back in the seats. If you are reclined, the lap belt may slide past your hips and apply restraint forces directly to the abdomen or your neck may contact the shoulder belt. In the event of a frontal collision, the more the seat is reclined, the greater the risk of death or personal injury.**

- **Be careful not to damage the belt webbing or hardware. Take care that they do not get caught or pinched in the seat or side doors.**
- **Inspect the belt system periodically. Check for cuts, fraying, and loose parts. Damaged parts should be replaced. Do not disassemble or modify the system.**
- **Keep the belts clean and dry. If they need cleaning, use a mild soap solution or lukewarm water. Never use bleach, dye, or abrasive cleaners, or allow them to come into contact with the belt—they may severely weaken the belts. (See “Cleaning the interior” on page 357 in Section 5.)**
- **Replace the belt assembly (including bolts) if it has been used in a severe impact. The entire assembly should be replaced even if damage is not obvious.**

—Fastening front and rear seat belts

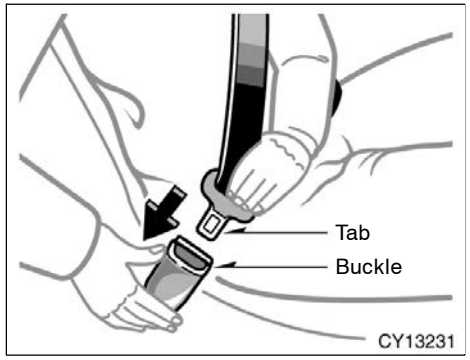

Adjust the seat as needed and sit up straight and well back in the seat. To fasten your belt, pull it out of the retractor and insert the tab into the buckle.

You will hear a click when the tab locks into the buckle.

The seat belt length automatically adjusts to your size and the seat position.

The retractor will lock the belt during a sudden stop or on impact. It also may lock if you lean forward too quickly. A slow, easy motion will allow the belt to extend, and you can move around freely.

When a passenger’s shoulder belt is completely extended and is then retracted even slightly, the belt is locked in that position and cannot be extended. This feature is used to hold the child restraint system securely. (For details, see “Child restraint” on page 95 in this Section.) To free the belt again, fully retract the belt and then pull the belt out once more.

If the seat belt cannot be pulled out of the retractor, firmly pull the belt and release it. You will then be able to smoothly pull the belt out of the retractor.

⚠ CAUTION

- **After inserting the tab, make sure the tab and buckle are locked and that the belt is not twisted.**
- **Do not insert coins, clips, etc. in the buckle as this may prevent you from properly latching the tab and buckle.**
- **If the seat belt does not function normally, immediately contact your Toyota dealer. Do not use the seat until the seat belt is fixed, because it cannot protect an adult occupant or your child from injury.**

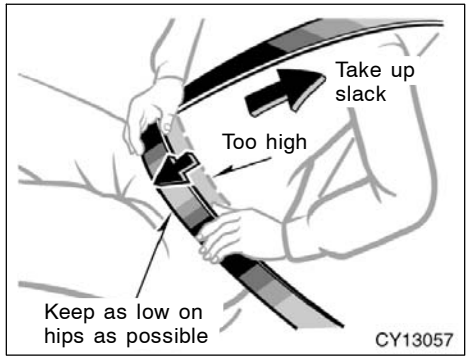

Adjust the position of the lap and shoulder belts.

Position the lap belt as low as possible on your hips—not on your waist, then adjust it to a snug fit by pulling the shoulder portion upward through the latch plate.

⚠ CAUTION

- **Both high–positioned lap belts and loose–fitting belts could cause serious injuries due to sliding under the lap belt during a collision or other unintended event. Keep the lap belt positioned as low on hips as possible.**
- **Do not place the shoulder belt under your arm.**

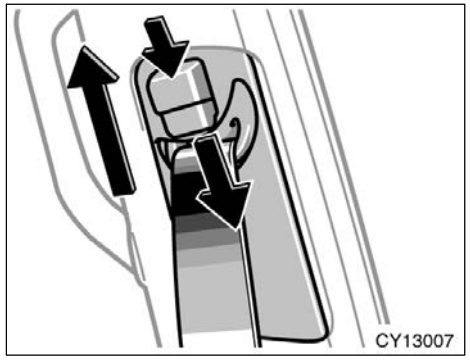

Seat belts with an adjustable shoulder anchor—

Adjust the shoulder anchor position to your size.

To raise: Slide the anchor up.
To lower: Push in the lock release button and slide the anchor down.

After adjustment make sure the anchor is locked in position.

CAUTION

Always make sure the shoulder belt is positioned across the center of your shoulder. The belt should be kept away from your neck, but not falling off your shoulder. Failure to do so could reduce the amount of protection in an accident and cause serious injuries in a collision.

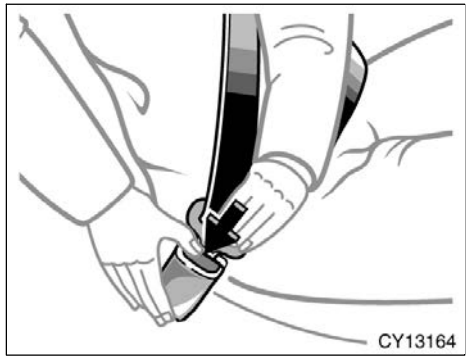

To release the belt, press the buckle release button and allow the belt to retract.

If the belt does not retract smoothly, pull it out and check for kinks or twists. Then make sure it remains untwisted as it retracts.

—Stowing rear seat belt buckles

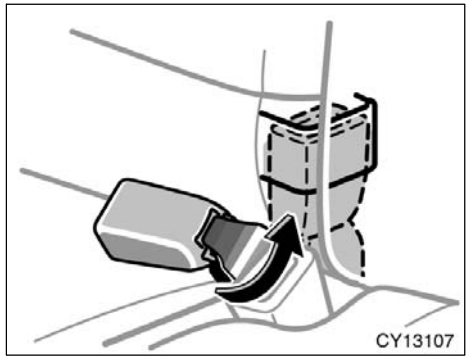

Rear center seat—vehicles without third seats

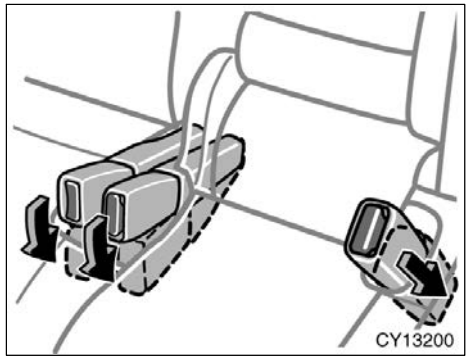

Second seats—vehicles with third seats

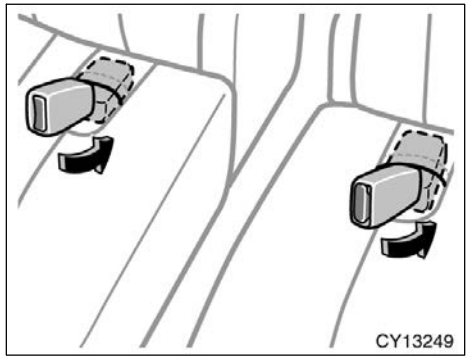

Third seats

The rear seat belt buckles can be stowed when not in use.

Seat belt buckle must be stowed before you fold the seatback. (See “—Folding down rear seats” on page 48, “—Tumbling second seats” on page 52, “—Folding up third seats” on page 54 or “—Removing third seats” on page 56 in this Section.)

—Seat belt extender

If your seat belts cannot be fastened securely because they are not long enough, a personalized seat belt extender is available from your Toyota dealer free of charge.

Please contact your local Toyota dealer to order the proper required length for the extender. Bring the heaviest coat you expect to wear for proper measurement and selection of length. Additional ordering information is available at your Toyota dealer.

⚠ CAUTION

When using the seat belt extender, observe the following precautions. Failure to follow these instructions could reduce the effectiveness of the seat belt restraint system in case of an accident, increasing the chance of personal injury.

- **Remember that the extender provided for you may not be safe when used on a different vehicle, for another person, or at a different seating position than the one originally intended.**

- **If the seat belt extender has been connected to the driver’s seat belt buckle without wearing the seat belt when using the extender in the driver’s seat, the SRS driver’s airbag system will judge that the driver wears the seat belt even if not wearing it. In this case, the driver’s airbag may not activate correctly, causing death or serious injury in the event of collision. Be sure to wear the seat belt with the seat belt extender.**

- **Make sure the front passenger occupant classification indicator light indicates “ON” when using the seat belt extender for the front passenger seat. If the indicator light indicates “OFF”, disconnect the extender tongue from the seat belt buckle, then reconnect the seat belt. Reconnect the seat belt extender after making sure the indicator light indicates “ON”. If you use the seat belt extender while the indicator light indicates “OFF”, the front passenger airbag and side airbag on the front passenger side may not activate correctly, which could cause death or serious injury in the event of collision.**
- **Be sure to wear the seat belt without the seat belt extender if you can fasten the seat belt without the extender.**

- **Do not use the seat belt extender when installing a child restraint system on the front or rear passenger seat. If installing a child restraint system with the seat belt extender connected to the seat belt, the seat belt will not securely hold the child restraint system, which could cause death or serious injury to the child or other passengers in the event of collision.**

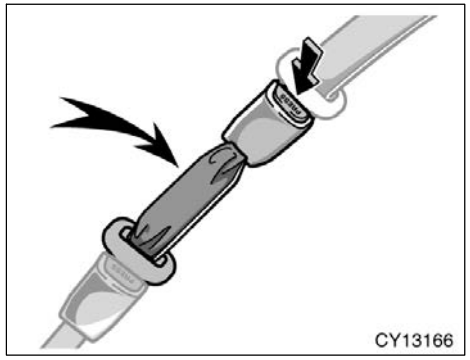

To connect the extender to the seat belt, insert the tab into the seat belt buckle so that the “PRESS” signs on the buckle release buttons of the extender and the seat belt are both facing outward as shown.

You will hear a click when the tab locks into the buckle.

When releasing the seat belt, press on the buckle release button on the extender, not on the seat belt. This helps prevent damage to the vehicle interior and extender itself.

As far as the seat belt extender on the front passenger side is concerned, do not fail to disconnect the extender from the seat belt after the above operation in order to activate the front passenger airbag correctly when getting into the vehicle next time.

When not in use, remove the extender and store in the vehicle for future use.

CAUTION

- **After inserting the tab, make sure the tab and buckle are locked and that the lap and shoulder portions of the belt and the seat belt extender are not twisted.**
- **Do not insert coins, clips, etc. in the buckle as this may prevent you from properly latching the tab and buckle.**
- **If the seat belt does not function normally, immediately contact your Toyota dealer. Do not use the seat until the seat belt is fixed, because it cannot protect an adult occupant or your child from injury.**

—Seat belt pretensioners

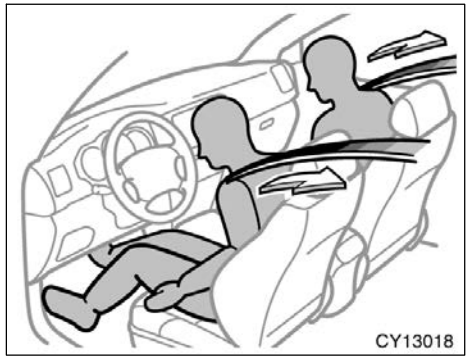

The driver and front passenger seat belt pretensioners are designed to be activated in response to a severe frontal impact. On vehicles equipped with curtain shield airbags, the pretensioners are also activated during vehicle rollover.

When the sensor detects a severe frontal impact or a vehicle rollover, the front seat belts are quickly drawn back by the retractors so that the belts snugly restrain the occupants.

The front passenger’s seat belt pretensioner will not activate if no passenger is detected in the front passenger seat by the front passenger occupant classification system. However, the front passenger’s seat belt pretensioner may activate if luggage is put on the seat, or the seat belt is buckled up regardless of the presence of an occupant in the seat. (As for the front passenger occupant classification system, see “—Front passenger occupant classification system” on page 90 in this Section.)

The seat belt pretensioners and SRS airbags may not operate together in all collisions.

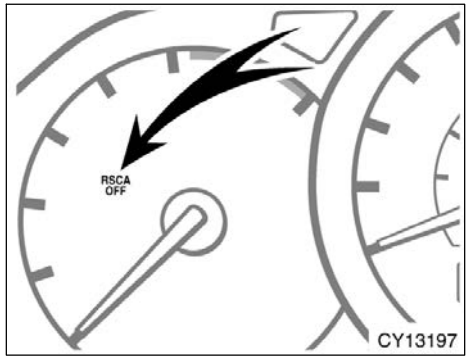

Type A

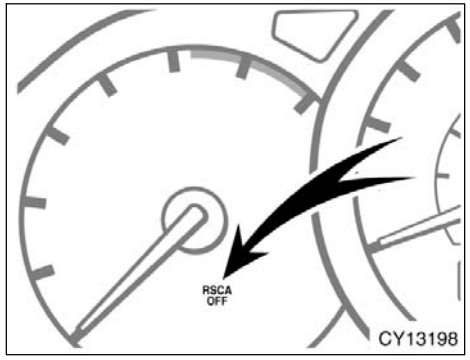

Type B

The seat belt pretensioners will not operate in a vehicle rollover if the “RSCA OFF” indicator light is on. For details, see “Roll sensing of curtain shield airbags off switch” on page 94 in this Section.

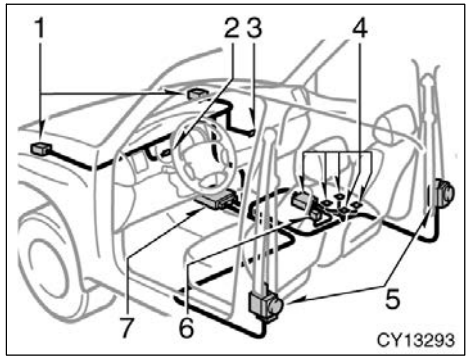

The seat belt pretensioner system consists mainly of the following components and their locations are shown in the illustration.

1. Front airbag sensors
2. SRS warning light
3. Front passenger occupant classification indicator light
4. Front passenger occupant classification system (ECU and sensors)
5. Seat belt pretensioner assemblies
6. Front passenger’s seat belt buckle switch
7. Airbag sensor assembly

The seat belt pretensioners are controlled by the airbag sensor assembly. The airbag sensor assembly consists of a safing sensor and airbag sensor.

When the seat belt pretensioners are activated, an operating noise may be heard and a small amount of non–toxic gas may be released. This does not indicate that a fire is occurring. This gas is normally harmless.

Once the seat belt pretensioners have been activated, the seat belt retractors remain locked.

⚠ CAUTION

- **Do not modify, remove, strike or open the seat belt pretensioner assemblies, airbag sensor or surrounding area or wiring. Failure to follow these instructions may prevent the seat belt pretensioners from activating correctly, cause sudden operation of the system or disable the system, which could result in death or serious injury. Consult your Toyota dealer about any repair and modification.**
- **Do not modify or change the suspension system. Such changes may cause the curtain shield airbags to inflate accidentally, which could result in death or serious injury. Consult your Toyota dealer about any repair and modification.**
- **Do not use tires or wheels other than the manufacture’s recommended size. Such a use may cause the curtain shield airbags and seat belt pretensioners to inflate accidentally, which could result in death or serious injury. For details, see “Checking and replacing tires” on page 384 in Section 7–2.**
- **Do not place luggage heavier than specified on the roof luggage carrier. Such luggage may cause the curtain shield airbags and seat belt pretensioners to inflate accidentally, which could result in death or serious injury. For details, see “Roof luggage carrier” on page 277 in Section 1–10.**

NOTICE

Do not perform any of the following changes without consulting your Toyota dealer. Such changes can interfere with proper operation of the seat belt pretensioners in some cases.

- ***Installation of electronic devices such as a mobile two–way radio, cassette tape player or compact disc player***
- ***Repairs on or near the front seat belt retractor assemblies***
- ***Modification of the front end structure***
- ***Attachment of a grille guard (bull bar, kangaroo bar, etc.), snowplow, winches or any other equipment to the front end***
- ***Repairs made on or near the front fenders, front end structure or console***

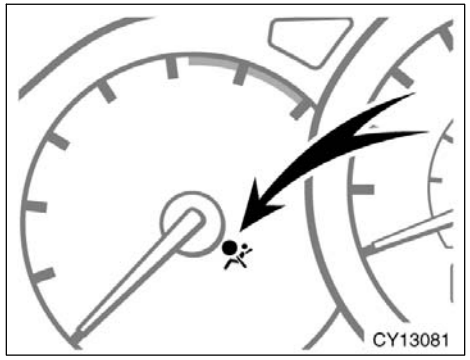

This indicator comes on when the ignition key is turned to the “ON” position. It goes off after about 6 seconds. This means the seat belt pretensioners are operating properly.

This warning light system monitors the airbag sensor assembly, front airbag sensors, side and curtain shield airbag sensors, curtain shield airbag sensors, driver’s seat position sensor, driver’s seat belt buckle switch, front passenger occupant classification system and indicator light, front passenger’s seat belt buckle switch, seat belt pretensioner assemblies, inflators, warning light, “RSCA OFF” indicator light, interconnecting wiring and power sources. (For details, see “Service reminder indicators and warning buzzers” on page 145 in Section 1–6.)

If any of the following conditions occurs, this indicates a malfunction of the airbags or seat belt pretensioners. Contact your Toyota dealer as soon as possible.

- The light does not come on when the ignition key is turned to the “ON” position or remains on for more than 6 seconds or flashes.
- The light comes on or starts flashing while driving.
- If any seat belt does not retract or can not be pulled out due to a malfunction or activation of the relevant seat belt pretensioner.
- The seat belt pretensioner assembly or surrounding area has been damaged.

The SRS warning light will come on and front passenger occupant classification indicator light will indicate “OFF” if there is a malfunction in the front passenger occupant classification system.

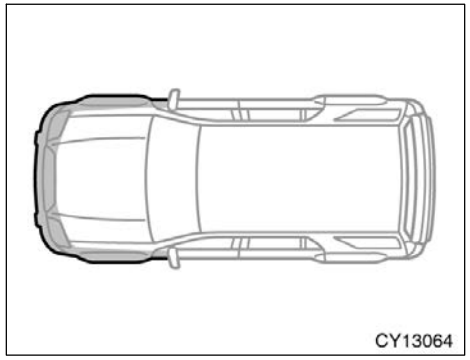

In the following cases, contact your Toyota dealer as soon as possible:

- The front of the vehicle (shaded in the illustration) was involved in an accident that was not severe enough to cause the seat belt pretensioners to operate.
- Either seat belt pretensioner assembly or surrounding area is scratched, cracked, or otherwise damaged.

SRS airbags—
—SRS driver airbag and front passenger airbag

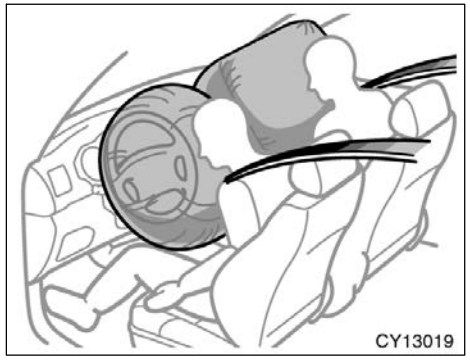

The SRS (Supplemental Restraint System) front airbags are designed to provide further protection for the driver and front passenger in addition to the primary safety protection provided by the seat belts.

Your vehicle is equipped with “ADVANCED AIRBAGS” designed based on US motor vehicle safety standards (FMVSS208). The airbag system controls airbag deployment power for the driver and front passenger. The driver airbag system consists of the driver seat’s position sensor etc. The front passenger’s airbag system consists of the front passenger occupant classification sensor etc.

In response to a severe frontal impact, the SRS front airbags work together with the seat belts to help reduce injury by inflating. The SRS front airbags help reduce injuries mainly to the driver’s or front passenger’s head or chest caused by hitting the vehicle interior.

The SRS front passenger airbag will not activate if there is no passenger sitting in the front passenger seat. However, the front passenger airbag may deploy if luggage is put in the seat, or the seat belt is buckled up, regardless of the presence of an occupant in the seat. (As for the front passenger occupant classification system, see “—Front passenger occupant classification system” on page 90 in this Section.)

Always wear your seat belt properly.

⚠ CAUTION

- **The SRS front airbag system is designed only as a supplement to the primary protection of the driver and front passenger seat belt systems. The driver and front passenger can be killed or seriously injured by the inflating airbags if they do not wear the available seat belts properly. During sudden braking just before a collision, an unrestrained driver or front passenger can move forward into direct contact with or close proximity to the airbag which may then deploy during the collision. To ensure maximum protection in an accident, the driver and all passengers in the vehicle must wear their seat belts properly. Wearing a seat belt properly during an accident reduces the chances of death or serious injury or being thrown out of the vehicle. For instructions and precautions concerning the seat belt system, see “Seat belts” on page 63 in this Section.**

- **Improperly seated and/or restrained infants and children can be killed or seriously injured by the deploying airbags. An infant or child who is too small to use a seat belt should be properly secured using a child restraint system. Toyota strongly recommends that all infants and children be placed in the rear seat of the vehicle and properly restrained. The rear seat is the safest for infants and children. For instructions concerning the installation of a child restraint system, see “Child restraint” on page 95 in this Section.**

The SRS front airbags are designed to deploy in severe (usually frontal) collisions where the magnitude and duration of the forward deceleration of the vehicle exceeds the designed threshold level.

The SRS front airbags will deploy if the severity of the impact is above the designed threshold level, comparable to an approximate 25 km/h (15 mph) collision when the vehicle has the impact straight into a fixed barrier that does not move or deform.

However, this threshold velocity will be considerably higher if the vehicle strikes an object, such as a parked vehicle or sign pole, which can move or deform on impact, or if the vehicle is involved in an underride collision (e.g. a collision in which the front of the vehicle “underrides”, or goes under, the bed of a truck, etc.).

It is possible that in some collisions where the forward deceleration of the vehicle is very close to the designed threshold level, the SRS front airbags and the seat belt pretensioners may not activate together.

Always wear your seat belts properly.

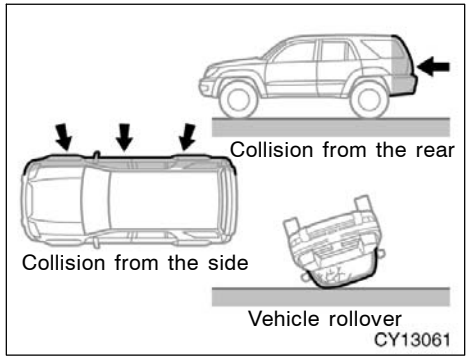

The SRS front airbags are generally not designed to inflate if the vehicle is involved in a side or rear collision, if it rolls over, or if it is involved in a low–speed frontal collision. But, whenever a collision of any type causes sufficient forward deceleration of the vehicle, deployment of the SRS front airbags may occur.

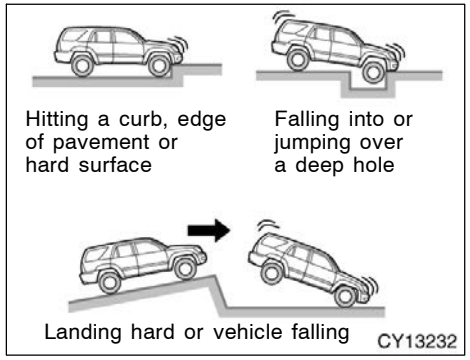

The SRS front airbags may also deploy if a serious impact occurs to the underside of your vehicle. Some examples are shown in the illustration.

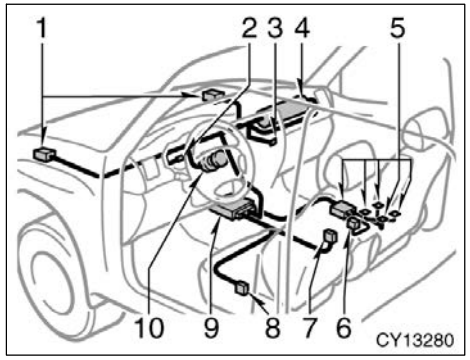

The SRS front airbag system consists mainly of the following components, and their locations are shown in the illustration.

1. Front airbag sensors
2. SRS warning light
3. Front passenger occupant classification indicator light
4. Airbag module for front passenger (airbag and inflator)
5. Front passenger occupant classification system (ECU and sensors)
6. Front passenger’s seat belt buckle switch
7. Driver’s seat belt buckle switch

8. Driver’s seat position sensor
9. Airbag sensor assembly
10. Airbag module for driver (airbag and inflator)

The airbag sensor assembly consists of a safing sensor and airbag sensor.

The front airbag sensors constantly monitor the forward deceleration of the vehicle. If an impact results in a forward deceleration beyond the designed threshold level, the system triggers the airbag inflators. At this time a chemical reaction in the inflators very quickly fills the airbags with non–toxic gas to help restrain the forward motion of the occupants. The front airbags then quickly deflate, so that there is no obstruction of the driver’s vision should it be necessary to continue driving.

When the airbags inflate, they produce a loud noise and release some smoke and residue along with non–toxic gas. This does not indicate a fire. This smoke may remain inside the vehicle for some time, and may cause some minor irritation to the eyes, skin or breathing. Be sure to wash off any residue as soon as possible to prevent any potential skin irritation with soap and water. If you can safely exit from the vehicle, you should do so immediately.

Deployment of the airbags happens in a fraction of a second, so the airbags must inflate with considerable force. While the system is designed to reduce serious injuries, primarily to the head and chest, it may also cause other, less severe injuries to the face, chest, arms and hands. These are usually in the nature of minor burns or abrasions and swelling, but the force of a deploying airbag can cause more serious injuries, especially if an occupant’s hands, arms, chest or head is in close proximity to the airbag module at the time of deployment. This is why it is important for the occupant to: avoid placing any object or part of the body between the occupant and the airbag module; sit straight and well back into the seat; wear the available seat belt properly; and sit as far as possible from the airbag module, while still maintaining control of the vehicle.

Parts of the airbag module (steering wheel hub, airbag cover and inflator) may be hot for several minutes after deployment, so do not touch! The airbags inflate only once. The windshield may be damaged by absorbing some of the force of the inflating airbag.

⚠ CAUTION

The driver or front passenger who is too close to the steering wheel or dashboard during airbag deployment can be killed or seriously injured. Toyota strongly recommends that:

- **The driver sit as far back as possible from the steering wheel while still maintaining control of the vehicle.**
- **The front passenger sit as far back as possible from the dashboard.**
- **All vehicle occupants be properly restrained using the available seat belts.**

For instructions and precautions concerning the seating position, see “—Front seat precautions” on page 42 in this Section.

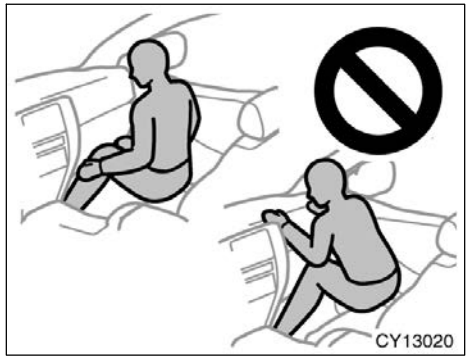

- **Do not sit on the edge of the seat or lean against the dashboard when the vehicle is in use, since the front passenger airbag could inflate with considerable speed and force. Anyone who is up against, or very close to, an airbag when it inflates, can be killed or seriously injured. Sit up straight and well back in the seat, and always use your seat belt properly.**

- **Toyota strongly recommends that all infants and children be placed in the rear seat of the vehicle and be properly restrained.**
- **Do not hold a child on your lap or in your arms. Use a child restraint system in the rear seat. For instructions concerning the installation of a child restraint system, see “Child restraint” on page 95 in this Section.**

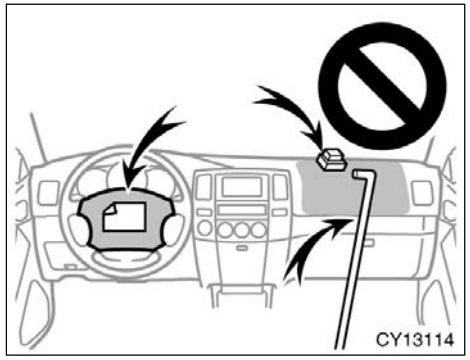

- **Do not put anything or any part of your body on or in front of the dashboard or steering wheel pad that houses the front airbag system. They might restrict inflation or cause death or serious injury as they are projected rearward by the force of the deploying airbags. Likewise, the driver and front passenger should not hold objects in their arms or on their knees.**

- **Do not modify or remove any wiring. Do not modify, remove, strike or open any components such as the steering wheel pad, steering wheel, column cover, dashboard near the front passenger airbag, front passenger airbag or airbag sensor assembly. Doing so may prevent the front airbag system from activating correctly, cause sudden activation of the system or disable the system, which could result in death or serious injury.**

Failure to follow these instructions can result in death or serious injury. Consult your Toyota dealer about any repair and modification.

If you wish to modify your vehicle for a person with physical disability, consult your Toyota dealer. It may dangerously interfere with the SRS front airbags operation.

NOTICE

Do not perform any of the following changes without consulting your Toyota dealer. Such changes can interfere with proper operation of the SRS front airbag system in some cases.

- ***Installation of electronic devices such as a mobile two−way radio, cassette tape player or compact disc player***
- ***Modification of the suspension system***
- ***Modification of the front end structure***
- ***Attachment of a grille guard (bull bar, kangaroo bar, etc.), snowplow, winches or any other equipment to the front end***
- ***Repairs made on or near the front fenders, front end structure, console, steering column, steering wheel or dashboard near the front passenger airbag***

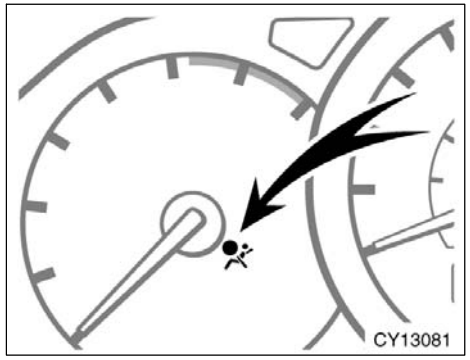

This indicator comes on when the ignition key is turned to the “ON” position. It goes off after about 6 seconds. This means the SRS front airbags are operating properly.

This warning light system monitors the airbag sensor assembly, front airbag sensors, side and curtain shield airbag sensors, curtain shield airbag sensors, driver’s seat position sensor, driver’s seat belt buckle switch, front passenger occupant classification system and indicator light, front passenger’s seat belt buckle switch, seat belt pretensioner assemblies, inflators, warning light, “RSCA OFF” indicator light, interconnecting wiring and power sources. (For details, see “Service reminder indicators and warning buzzers” on page 145 in Section 1–6.)

If any of the following conditions occurs, this indicates a malfunction of the airbags or seat belt pretensioners. Contact your Toyota dealer as soon as possible.

- The light does not come on when the ignition key is turned to the “ON” position or remains on for more than 6 seconds or flashes.
- The light comes on or starts flashing while driving.

The SRS warning light will come on and front passenger occupant classification indicator light will indicate “OFF” if there is a malfunction in the front passenger occupant classification system.

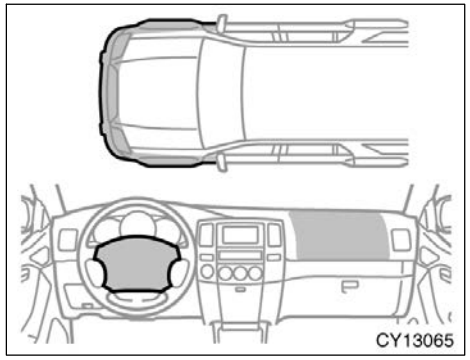

In the following cases, contact your Toyota dealer as soon as possible:

- The SRS front airbags have been inflated.
- The front of the vehicle (shaded in the illustration) was involved in an accident that was not severe enough to cause the SRS front airbags to inflate.
- The pad section of the steering wheel or dashboard (shaded in the illustration) is scratched, cracked, or otherwise damaged.

NOTICE

Do not disconnect the battery cables before contacting your Toyota dealer.

—SRS side airbags and curtain shield airbags

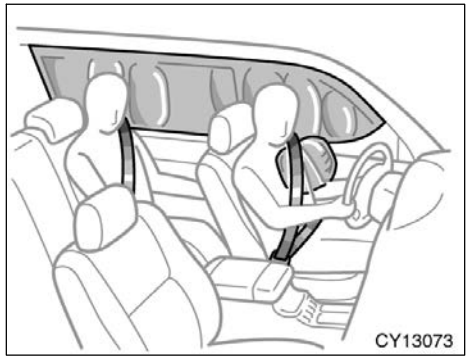

The SRS (Supplemental Restraint System) side airbags and curtain shield airbags are designed to provide further protection for the driver, front passenger and rear seat passengers*1/second seat passengers*2 in addition to the primary safety protection provided by the seat belts.

*1: Without third seats
*2: With third seats

In response to a severe side impact, the SRS side airbag and curtain shield airbags in the impacted side work with the seat belts to help reduce injury by inflating. The SRS side airbags help reduce injuries mainly to the driver’s or front passenger’s chest. The SRS curtain shield airbags help reduce injuries mainly to the driver’s, front passenger’s or rear/second passenger’s head and help prevent them from being thrown out of the vehicle.

The SRS side airbag on the passenger seat will not activate if there is no passenger sitting in the front passenger seat. However, the side airbag on the passenger seat may deploy if luggage is put in the seat, or the seat belt is buckled up regardless of the presence of the occupant in the seat. (As for the front passenger occupant classification system, see “—Front passenger occupant classification system” on page 90 in this Section.)

The SRS curtain shield airbag on the passenger side are activated even with no passenger in the front seat or rear/second outside seat.

Roll sensing function:
In response to a vehicle rollover, the curtain shield airbags on both sides work with the seat belts to help reduce injury by inflating. The curtain shield airbags help reduce injuries mainly to the driver’s, front passenger’s or rear/second passenger’s head and help prevent them from being thrown out of the vehicle. (This function can be turned off if inflation is not desired. See “Roll sensing of curtain shield airbags off switch” on page 94 in this Section.)

The SRS curtain shield airbags may activate even when the side airbags are not activated.

Always wear your seat belt properly.

⚠ CAUTION

- **The SRS side airbag and curtain shield airbag system is designed only as a supplement to the primary protection of the driver, front passenger and rear /second passenger seat belt systems. To ensure maximum protection in an accident, the driver and all passengers in the vehicle must wear their seat belts properly. Wearing a seat belt properly during an accident reduces the chances of death or serious injury or being thrown out of the vehicle. For instructions and precautions concerning the seat belt system, see “Seat belts” on page 63 in this Section.**

- **Do not allow anyone to lean his/her head or any part of his/her body against the door or the area of the seat, front pillar, rear pillar or roof side rail from which the SRS side airbag and curtain shield airbag deploy even if he/she is a child seated in the child restraint system. It is dangerous if the SRS side airbag and curtain shield airbag inflate, and the impact of the deploying airbag could cause death or serious injury to the occupant.**

- **Improperly seated and/or restrained infants and children can be killed or seriously injured by the deploying airbags. An infant or child who is too small to use a seat belt should be properly secured using a child restraint system. Toyota strongly recommends that all infants and children be placed in the rear seats of the vehicle and properly restrained. The rear seats are the safest for infants and children. For instructions concerning the installation of a child restraint system, see “Child restraint” on page 95 in this Section.**

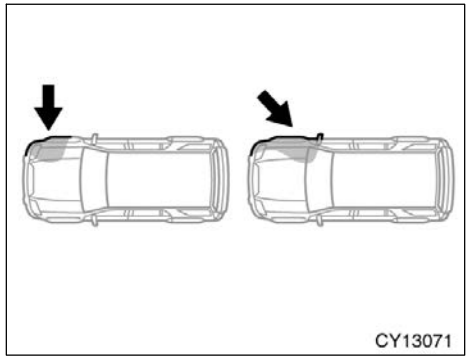

The SRS side airbags may not activate if the vehicle is subjected to a collision from the side at certain angles, or a collision to the side of the vehicle body other than the passenger compartment as shown in the illustration.

The SRS side airbags are designed to inflate when the passenger compartment area suffers a severe impact from the side.

Always wear your seat belts properly.

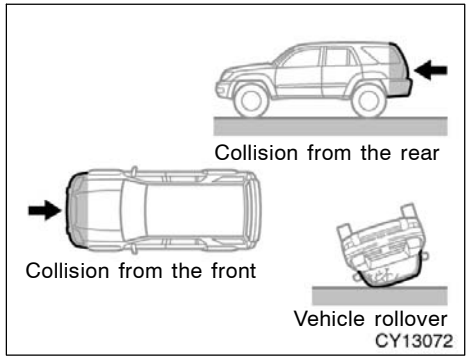

The SRS side airbags are not generally designed to inflate if the vehicle is involved in a front or rear collision, if it rolls over, or if it is involved in a low–speed side collision.

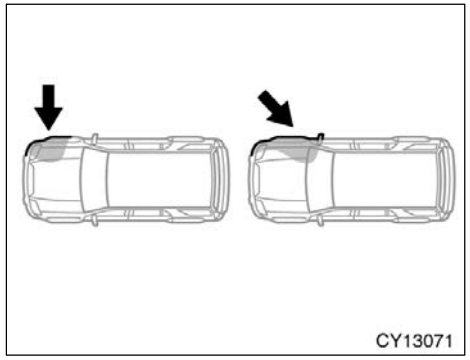

The curtain shield airbags may not activate if the vehicle is subjected to a collision from the side at certain angles, or a collision to the side of the vehicle body other than the passenger compartment as shown in the illustration.

The curtain shield airbags are designed to inflate when the passenger compartment area suffers a severe impact from the side or vehicle rollover.

Always wear your seat belts properly.

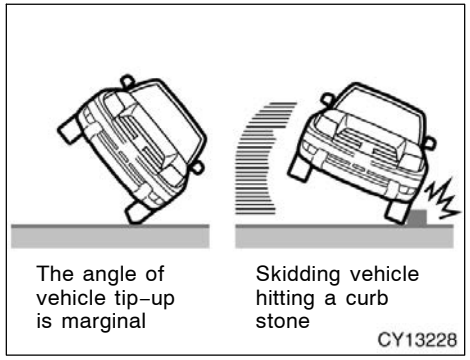

The curtain shield airbags may inflate if the angle of vehicle tip–up is marginal or if the skidding vehicle’s tires hit a curb stone laterally as shown in the illustration.

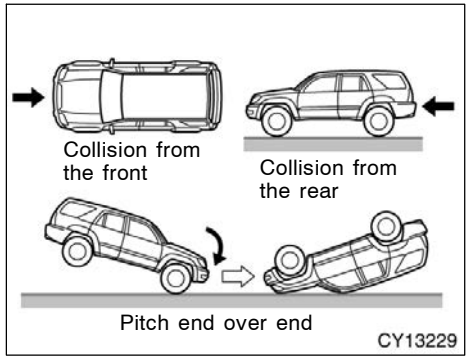

The curtain shield airbags are not generally designed to inflate if the vehicle is involved in a front or rear collision, if it pitches end over end, or if it is involved in a low–speed side collision.

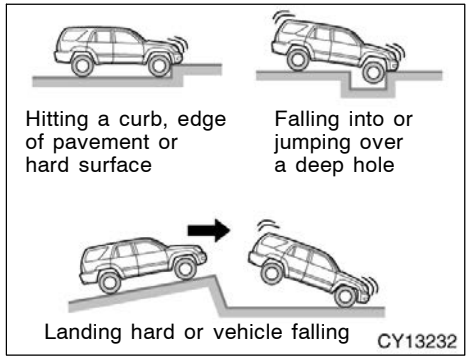

The SRS side and curtain shield airbags may deploy if a serious impact occurs to the underside of your vehicle. Some examples are shown in the illustration.

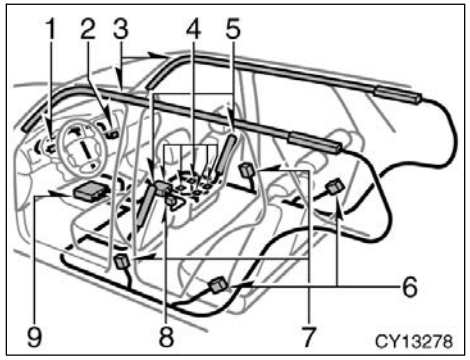

The SRS side airbag and curtain shield airbag system consists mainly of the following components, and their locations are shown in the illustration.

1. SRS warning light
2. Front passenger occupant classification indicator light
3. Curtain shield airbag modules (airbag and inflator)
4. Front passenger occupant classification system (ECU and sensors)
5. Side airbag modules (airbag and inflator)
6. Curtain shield airbag sensors
7. Side and curtain shield airbag sensors
8. Front passenger’s seat belt buckle switch
9. Airbag sensor assembly

The SRS side airbag and curtain shield airbag system is controlled by the airbag sensor assembly. The airbag sensor assembly consists of a safing sensor and airbag sensor.

In a severe side impact, the side and curtain shield airbag sensor and/or the curtain shield airbag sensor trigger(s) the side airbag inflators and/or the curtain shield airbag inflators. At this time a chemical reaction in the inflators quickly fills the airbags with non–toxic gas to help restrain the lateral motion of the occupants.

In a vehicle rollover, the airbag sensor assembly triggers the curtain shield airbag inflator. At this time, a chemical reaction in the inflators quickly fills the airbags with non–toxic gas to help restrain the lateral motion of the occupants.

When the airbags inflate, they produce a fairly loud noise and release some smoke and residue along with non–toxic gas. This does not indicate a fire. This smoke may remain inside the vehicle for some time, and may cause some minor irritation to the eyes, skin or breathing. Be sure to wash off any residue as soon as possible to prevent any potential skin irritation with soap and water. If you can safely exit from the vehicle, you should do so immediately.

Deployment of the airbags happens in a fraction of a second, so the airbags must inflate with considerable force. While the system is designed to reduce serious injuries, it may also cause minor burns or abrasions and swelling.

Front seats as well as parts of the front and rear pillars, front, center and rear garnish and roof interior may be hot for several minutes, but the airbags themselves will not be hot. The airbags are designed to inflate only once.

⚠ CAUTION

SRS side airbags and curtain shield airbags inflate with considerable force. To reduce the possibility of death or serious injury when they inflate, the driver, front passenger and rear/second passengers must:

- **Wear their seat belts properly.**
- **Remain properly seated with their backs upright and against the seats at all times.**

Improper sitting and wearing of the seat belts may not retain you inside the vehicle.

- **Do not allow anyone to lean against the door when the vehicle is in use, since the side airbag and curtain shield airbag could inflate with considerable speed and force. Otherwise, he/she may be killed or seriously injured. Special care should be taken especially when you have a small child in the vehicle.**
- **Sit up straight and well back in the seat, distributing your weight evenly in the seat. Do not apply excessive weight to the outer side of the seats with a side airbag, and to the front pillar, rear pillar and roof side rail with a curtain shield airbag.**

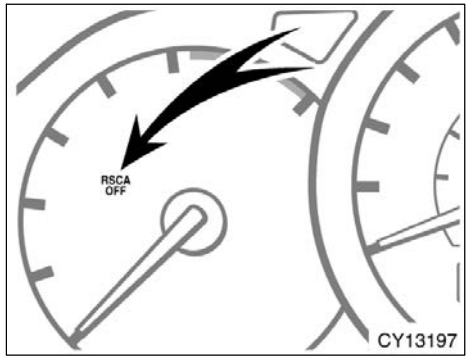

Type A

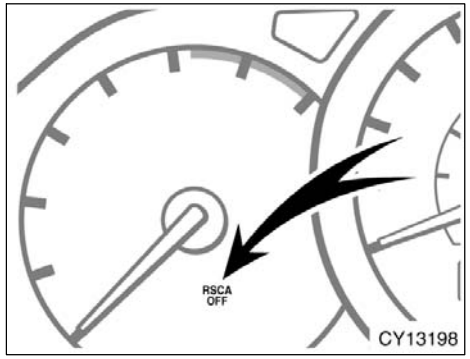

Type B

- **Make sure the “RSCA OFF” indicator light is off. The curtain shield airbags will not inflate in a vehicle rollover if this indicator light is on and you may be killed or seriously injured. For details, see “Roll sensing of curtain shield airbags off switch” on page 94 in this Section.**

- **Do not allow anyone to get his/her head closer to the area where the side airbag and curtain shield airbag inflate, since these airbags could inflate with considerable speed and force. Otherwise, he/she may be killed or seriously injured. Special care should be taken especially when you have a small child in the vehicle.**

- **Do not allow anyone to kneel on the passenger seat, facing the passenger’s side door, since the side airbag and curtain shield airbag could inflate with considerable speed and force. Otherwise, he/she may be killed or seriously injured. Special care should be taken especially when you have a small child in the vehicle.**

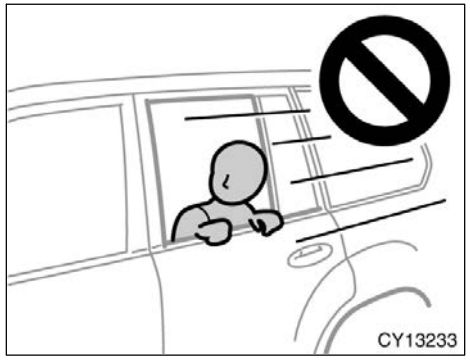

- **Do not allow anyone to get his/her head or hands out of windows since the curtain shield airbags could inflate with considerable speed and force. Otherwise, he/she may be killed or seriously injured. Special care should be taken especially when you have a small child in the vehicle.**

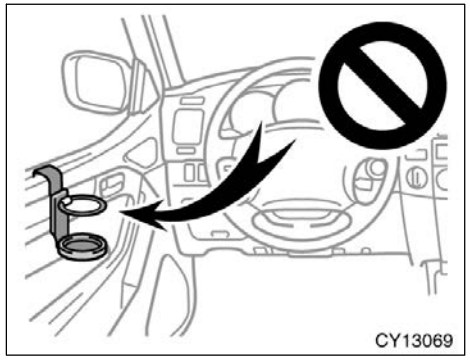

- **Do not attach a cup holder or any other device or object on or around the door. When the side airbag inflates, the cup holder or any other device or object will be thrown with great force or the side airbag may not activate correctly, resulting in death or serious injury. Likewise, the driver and front passenger should not hold objects in their arms or on their knees.**

- **Do not attach a microphone or any other device or object near the area where the curtain shield airbags activate such as on the windshield glass, side door glass, front, center and roof side garnish, roof interior or assist grips. When the curtain shield airbags inflate, the microphone or other device or object will be hurled with great force or the curtain shield airbags may not activate correctly, which could result in death or serious injury.**

- **Do not hook a hanger, heavy or sharp pointed objects on the coat hook. If the curtain shield airbag inflates, those items will be thrown away with great force or the curtain shield airbag may not activate correctly, resulting in death or serious injury. When you hang clothes, hang them on the coat hook directly.**
- **Do not use seat accessories which cover the parts where the side airbags inflate. Such accessories may prevent the side airbags from activating correctly, causing death or serious injury.**
- **Do not modify or replace the seats or upholstery of the seats with side airbags. Such changes may prevent the side airbag system from activating correctly, disable the system or cause the side airbags to inflate accidentally, resulting in death or serious injury.**

- **Do not disassemble or repair the front pillars and roof side rails containing the curtain shield airbags. Such changes may disable the system or cause the curtain shield airbags to inflate accidentally, resulting in death or serious injury.**
- **Do not modify or change the suspension system. Such changes may cause the curtain shield airbags to inflate accidentally, which could result in death or serious injury.**
- **Do not use tires or wheels other than the manufacturer’s recommended size. Such a use may cause the curtain shield airbags to inflate accidentally, which could result in death or serious injury. For details, see “Checking and replacing tires” on page 384 in Section 7–2.**
- **Do not place luggage heavier than specified on the roof luggage carrier. Such luggage may cause the curtain shield airbags to inflate accidentally, which could result in death or serious injury. For details, see “Roof luggage carrier” on page 277 in Section 1–10.**

Failure to follow these instructions can result in death or serious injury. Consult your Toyota dealer about any repair and modification.

If you wish to modify your vehicle for a person with physical disability, consult your Toyota dealer. It may dangerously interfere with the SRS side airbags and curtain shield airbags operation.

NOTICE

Do not perform any of the following changes without consulting your Toyota dealer. Such changes can interfere with proper operation of the SRS side airbag and curtain shield airbag system in some cases.

- ***Installation of electronic devices such as a mobile two–way radio, cassette tape player or compact disc player***
- ***Modification of the side structure of the passenger compartment***
- ***Repairs made on or near the console or front seat***

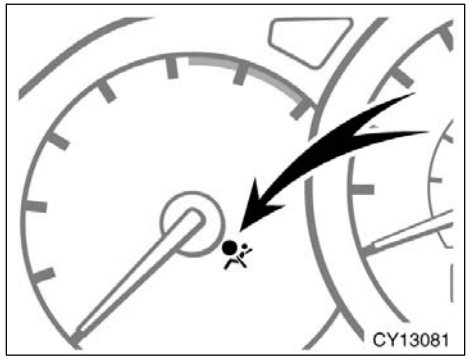

This indicator comes on when the ignition key is turned to the “ON” position. It goes off after about 6 seconds. This means the SRS side airbags and curtain shield airbags are operating properly.

This warning light system monitors the airbag sensor assembly, front airbag sensors, side and curtain shield airbag sensors, curtain shield airbag sensors, driver’s seat position sensor, driver’s seat belt buckle switch, front passenger occupant classification system and indicator light, front passenger’s seat belt buckle switch, seat belt pretensioner assemblies, inflators, warning light, “RSCA OFF” indicator light, interconnecting wiring and power sources. (For details, see “Service reminder indicators and warning buzzers” on page 145 in Section 1–6.)

If any of the following conditions occurs, this indicates a malfunction of the airbags or seat belt pretensioners. Contact your Toyota dealer as soon as possible.

- The light does not come on when the ignition key is turned to the “ON” position or remains on for more than 6 seconds or flashes.
- The light comes on or starts flashing while driving.

The SRS warning light will come on and front passenger occupant classification indicator light will indicate “OFF” if there is a malfunction in the front passenger occupant classification system.

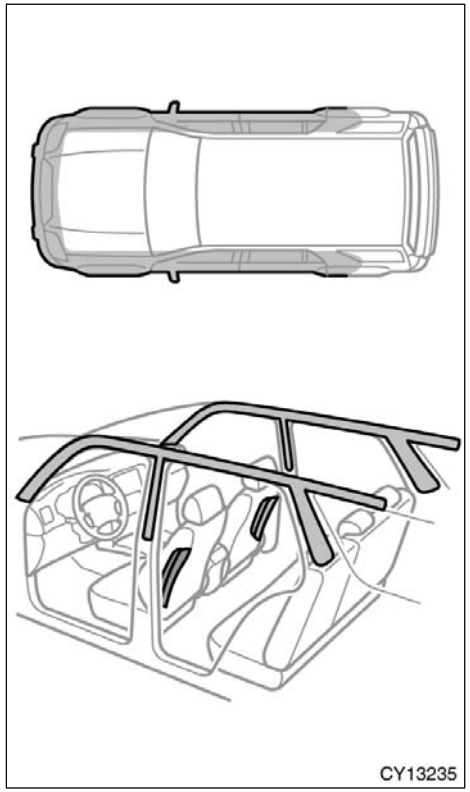

In the following cases, contact your Toyota dealer as soon as possible:

- Any of the SRS side airbags and curtain shield airbags have been inflated.
- The portion of the doors (shaded in the illustration) was involved in an accident that was not severe enough to cause the SRS side airbags and curtain shield airbags to inflate.
- The surface of the seats with the side airbag (shaded in the illustration) is scratched, cracked, or otherwise damaged.
- The portion of the front, center and rear garnish, and roof interior containing the curtain shield airbags inside (shaded in the illustration) is scratched, cracked, or otherwise damaged.

NOTICE
Do not disconnect the battery cables before contacting your Toyota dealer.

—Front passenger occupant classification system

Your vehicle is equipped with a front passenger occupant classification system. This system detects the conditions 1—4 in the table on page 92 and based on these conditions activates or deactivates the following systems;

- Front passenger airbag
- Side airbag on the front passenger seat
- Front passenger’s seat belt pretensioner

The system monitors the weight and load on the front passenger seat, and the seat belt buckle switch to determine conditions 1—4.

In order for the system to detect the conditions correctly, do not do any of the following:

- Apply a heavy load to the front passenger seat.
- Attach a commercial seatback table, etc. to the front passenger seatback.
- Put weight on the front passenger seat by putting your hands or feet on the seatback from the rear passenger seat.

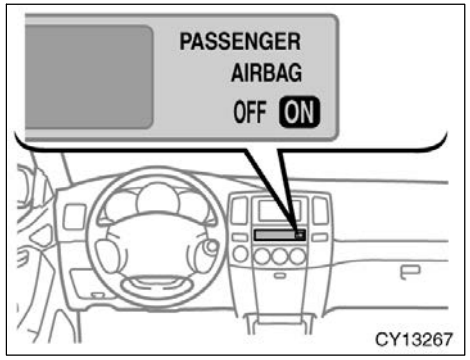

The front passenger occupant classification indicator light indicates the actuation of the front passenger airbag, side airbag on the front passenger seat and front passenger’s seat belt pretensioner.

The indicator light will indicate “OFF” when the ignition switch is in the “ON” position with the condition 2 in the table shown below.

If the front passenger occupant classification system determines that a person of adult size sits in the front passenger seat but the “OFF” indicator is illuminated, one of the following is likely to have occurred:

- A rear passenger lifts the front passenger seat cushion with their legs.
- Objects are placed under the front passenger seat.
- The front passenger seatback is in contact with the rear/second seat.

To ensure the system correctly detects an adult sitting in the front passenger seat, make sure the above do not occur.

Make sure that the “ON” indicator is illuminated when an adult is seated in the front passenger seat. If the “OFF” indicator is illuminated, ask the passenger to sit up straight, well back in the seat, and with the seat belt worn correctly. If the “OFF” indicator still remains illuminated, either ask the passenger to move to the rear seat, or if that is not possible, move the front passenger seat fully rearward.

The front passenger occupant classification indicator light will indicate “ON” and “OFF” when the ignition key is turned to the “ON” position. After about four seconds, it will go off. After that, the front passenger occupant classification system operates and judges whether to indicate “ON” or “OFF”.

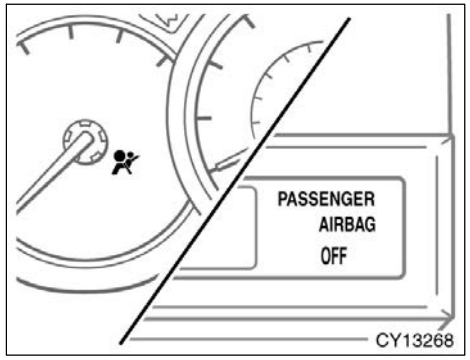

The SRS warning light will come on and front passenger occupant classification indicator light will indicate “OFF” if there is a malfunction in the front passenger occupant classification system.

Condition and operation in the front passenger occupant classification system

<table>
<tr><th rowspan="2">Condition detected by the front passenger occupant classification system</th><th colspan="3">Indicator/warning light</th><th colspan="4">Devices</th></tr>
<tr><th>Front passenger occupant classification indicator light</th><th>SRS warning light</th><th>Front passenger’s seat belt reminder light</th><th>Front passenger airbag</th><th>Side airbag on the front passenger seat</th><th>Curtain shield airbag in the front passenger side</th><th>Front passenger’s seat belt pretensioner</th></tr>
<tr><td>1. Adult*1</td><td>“ON”</td><td>Off</td><td>Flashing*4</td><td colspan="4">Activated</td></tr>
<tr><td>2. Child*2 or child restraint system*3</td><td>“OFF”</td><td>Off</td><td>Flashing*4</td><td colspan="2">Deactivated</td><td rowspan="3">Activated</td><td>Activated</td></tr>
<tr><td>3. Unoccupied</td><td>Not illuminated</td><td>Off</td><td>Off</td><td colspan="2">Deactivated</td><td>Deactivated</td></tr>
<tr><td>4. There is a malfunction in the system</td><td>“OFF”</td><td>On</td><td>Off</td><td colspan="2">Deactivated</td><td>Activated</td></tr>
</table>

*1: The system judges a person of adult size as an adult. When a smaller adult sits in the front passenger seat, the system may recognize him/her as a child depending on his/her physique and posture.

*2: When a larger child who has outgrown a child restraint system sits in the front passenger seat, the system may recognize him/her as an adult depending on his/her physique or posture.

*3: Never install a rear-facing child restraint system on the front passenger seat. A forward-facing child restraint system should only be installed on the front passenger seat when it is unavoidable. (See “Child restraint” on page 95 in this Section as for installing the child restraint system.)

*4: In the event the front passenger does not wear a seat belt.

⚠ CAUTION

To avoid potential death or serious injury when the front passenger occupant classification system does not detect the conditions correctly, observe the following.

- Make sure the front passenger occupant classification indicator light indicates “ON” when using the seat belt extender for the front passenger seat. If the indicator light indicates “OFF”, disconnect the extender tongue from the seat belt buckle, then reconnect the seat belt. Reconnect the seat belt extender after making sure the indicator light indicates “ON”. If you use the seat belt extender while the indicator light indicates “OFF”, the front passenger airbag and side airbag on the front passenger side may not activate correctly, which could cause death or serious injury in the event of collision.
- Do not recline the front passenger seatback so far that it touches a second seat. This may cause the “OFF” indicator to be illuminated, which indicates that the passenger’s airbags will not deploy in the event of a severe accident. If the seatback touches the rear/second seat, return the seatback to a position where it does not touches the rear/second seat.

  Keep the front passenger seatback as upright as possible when the vehicle is moving. Reclining the seatback excessively may lessen the effectiveness of the seat belt system.
- If an adult sits in the front passenger seat, the occupant classification indicator light should indicate “ON”. If the “OFF” indicator is illuminated, ask the passenger to sit up straight, well back in the seat, feet on the floor, and with the seat belt worn correctly. If the “OFF” indicator still remains illuminated, either ask the passenger to move to the rear/second seat, or if that is not possible, move the front passenger seat fully rearward.
- Wear the seat belt properly.
- Make sure the front passenger’s seat belt tab has not been left inserted into the buckle before someone sits in the front passenger seat.
- Do not apply a heavy load to the front passenger seat.
- Do not put weight on the front passenger seat by putting your hands or feet on the front passenger seat seatback from the rear/second passenger seat.
- Do not let a rear/second passenger lift the front passenger seat with their feet or press on the seatback with their legs.
- Do not put objects under the front passenger seat.
- Child restraint systems installed on the rear/second seat should not contact the front seatbacks.

- **When it is unavoidable to install the forward–facing child restraint system on the front passenger seat, install the child restraint system on the front passenger seat in the proper order. (As for the installation order, see “—Installation with seat belt” on page 98 in this Section.)**
- **Do not remove the front seats.**
- **Do not kick the front passenger seat or subject it to severe impact. Otherwise, the SRS warning light may come on to indicate a malfunction of the detection system. In this case, contact your Toyota dealer immediately.**

The front passenger occupant classification indicator light may indicate “ON” (the front passenger airbag and side airbag on the front passenger seat may deploy) even if observing the above cautions, when a child sits in, or a forward–facing child restraint system is installed on the front passenger seat. Refer to all the cautions in “SRS airbags” on page 73 and “Child restraint” on page 95 in this Section.

Roll sensing of curtain shield airbags off switch

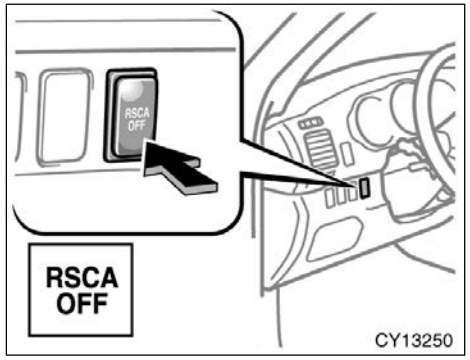

The roll sensing of curtain shield airbags off switch (“RSCA OFF” switch) can turn off the curtain shield airbags and seat belt pretensioners in a vehicle rollover. This switch should only be used if inflation is not desired (such as extreme off–road driving).

When you push the “RSCA OFF” switch for a few seconds with the ignition switch on, the “RSCA OFF” indicator light comes on and the roll sensing function is turned off. When you push the switch again, the indicator light goes off and the roll sensing function is turned on. (For details about the roll sensing function, see “—SRS side airbags and curtain shield airbags” on page 80 in this Section.)

In a severe side impact, the curtain shield airbags on impacted side will inflate even if the roll sensing function is turned off. (For details about the curtain shield airbags, see “—SRS side airbags and curtain shield airbags” on page 80 in this Section.)

In a severe frontal impact, the seat belt pretensioners will work even if the roll sensing function is turned off. (For details about the seat belt pretensioners, see “—Seat belt pretensioners” on page 69 in this Section.)

If the ignition switch is turned to “ACC” or “LOCK” with the roll sensing function off and then the ignition switch is turned back to “ON”, the roll sensing function will turn back on automatically.

CAUTION

- **Before normal driving, make sure the “RSCA OFF” indicator light is off.**
- **When the roll sensing function is turned off (and the “RSCA OFF” indicator light is on), the curtain shield airbags and seat belt pretensioners will not work in a vehicle rollover. Turning off the curtain shield airbags and seat belt pretensioners reduces occupant protection which your vehicle safety systems can provide in accidents and increase the likelihood of death or serious injuries.**

Child restraint—
—Child restraint precautions

Toyota strongly urges the use of appropriate child restraint systems for children.

The laws of all 50 states in the U.S.A. and Canada now require the use of a child restraint system.

Your vehicle conforms to SAE J1819.

If a child is too large for a child restraint system, the child should sit in the rear seat and must be restrained using the vehicle’s seat belt. See “Seat belts” on page 63 in this Section for details.

CAUTION

- **For effective protection in automobile accidents and sudden stops, a child must be properly restrained, using a seat belt or child restraint system depending on the age and size of the child. Holding a child in your arms is not a substitute for a child restraint system. In an accident, the child can be crushed against the windshield, or between you and the vehicle’s interior.**

- **Toyota strongly urges use of a proper child restraint system which conforms to the size of the child, and is put on the rear seat. According to accident statistics, the child is safer when properly restrained in the rear seat than in the front seat.**
- **Never install a rear−facing child restraint system on the front passenger seat even if the front passenger occupant classification indicator light indicates “OFF”. In the event of an accident, the impact of the rapid inflation of the front passenger airbag could cause death or serious injury to the child if the rear−facing child restraint system is installed on the front passenger seat.**

- **A forward–facing child restraint system should be allowed to be installed on the front passenger seat only when it is unavoidable. Always move the seat as far back as possible even if the front passenger occupant classification indicator light indicates “OFF”, because the front passenger airbag could inflate with considerable speed and force. Otherwise, the child may be killed or seriously injured.**
- **On vehicles with side airbags and curtain shield airbags, do not allow the child to lean his/her head or any part of his/her body against the door or the area of the seat, front or rear pillar or roof side rail from which the side airbags or curtain shield airbags deploy even if the child is seated in the child restraint system. It is dangerous if the side airbag and curtain shield airbag inflate, and the impact could cause death or serious injury to the child.**

- **Do not use the seat belt extender when installing a child restraint system on the front or rear passenger seat. If installing a child restraint system with the seat belt extender connected to the seat belt, the seat belt will not securely hold the child restraint system, which could cause death or serious injury to the child or other passengers in the event of collision.**
- **Make sure you have complied with all installation instructions provided by the child restraint manufacturer and that the system is properly secured. If it is not secured properly, it may cause death or serious injury to the child in the event of a sudden stop or accident.**

—Child restraint system

A child restraint system for a small child or baby must itself be properly restrained on the seat with the lap portion of the lap/shoulder belt. You must carefully consult the manufacturer’s instructions which accompany the child restraint system.

To provide proper restraint, use a child restraint system following the manufacturer’s instructions about the appropriate age and size of the child for the child restraint system.

Install the child restraint system correctly following the instructions provided by its manufacturer. General directions are also provided under the following illustrations.

The child restraint system should be installed on the rear seat. According to accident statistics, the child is safer when properly restrained in the rear seat than in the front seat.

When not using the child restraint system, keep it secured with the seat belt or place it somewhere other than the passenger compartment. This will prevent it from injuring passengers in the event of a sudden stop or accident.

—Types of child restraint system

Child restraint systems are classified into the following 3 types depending on the child’s age and size.

(A) Infant seat
(B) Convertible seat
(C) Booster seat

Install the child restraint system following the instructions provided by its manufacturer.

Your vehicle has anchor brackets for securing the top strap of a child restraint system.

For instructions about how to use the anchor bracket, see “—Using a top strap” on page 108 in this Section.

The child restraint lower anchorages approved for your vehicle may also be used. See “—Installation with child restraint lower anchorages” on page 112 in this Section.

(A) Infant seat

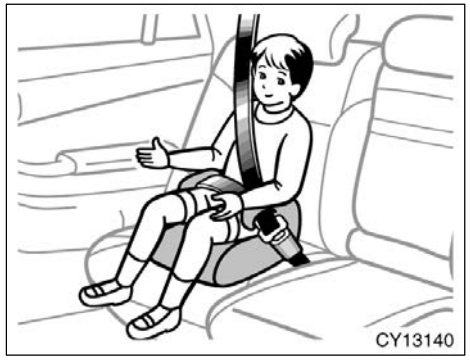

(C) Booster seat

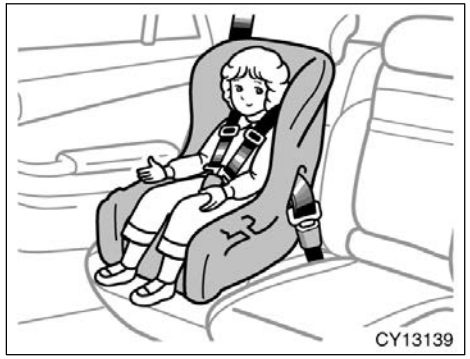

(B) Convertible seat

—Installation with seat belt

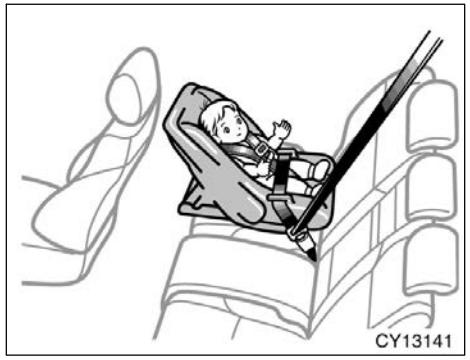

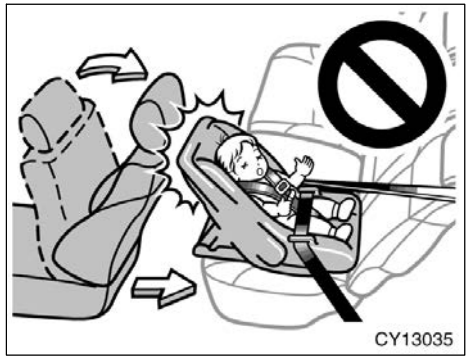

(A) INFANT SEAT INSTALLATION

An infant seat must be used in rear−facing position only.

⚠ CAUTION

- **Never install a rear−facing child restraint system on the front passenger seat even if the front passenger occupant classification indicator light indicates “OFF”. In the event of an accident, the impact of the rapid inflation of the front passenger airbag could cause death or serious injury to the child if the rear−facing child restraint system is installed on the front passenger seat.**

- **Do not install a child restraint system on the second (or third) seat if it interferes with the lock mechanism of the front (or second) seats. Otherwise, the child or front (or second) seat occupant(s) may be killed or seriously injured in case of sudden braking or a collision.**
- **If the driver’s seat position does not allow sufficient space for safe installation, install the child restraint system on the rear right seat.**

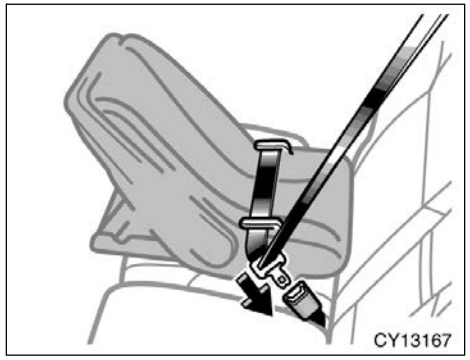

1. Run the lap and shoulder belt through or around the infant seat following the instructions provided by its manufacturer and insert the tab into the buckle taking care not to twist the belt. Keep the lap portion of the belt tight.

⚠ CAUTION

- **After inserting the tab, make sure the tab and buckle are locked and that the lap and shoulder portions of the belt are not twisted.**
- **Do not insert coins, clips, etc. in the buckle as this may prevent your child from properly latching the tab and buckle.**
- **If the seat belt does not function normally, it cannot protect your child from death or serious injury. Contact your Toyota dealer immediately. Do not install the child restraint system on the seat until the seat belt is fixed.**

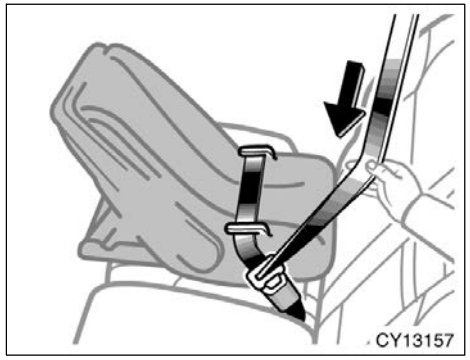

2. Fully extend the shoulder belt to put it in the lock mode. When the belt is then retracted even slightly, it cannot be extended.

To hold the infant seat securely, make sure the belt is in the lock mode before letting the belt retract.

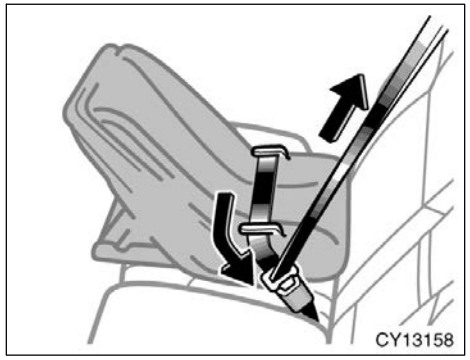

3. While pressing the infant seat firmly against the seat cushion and seatback, let the shoulder belt retract as far as it will go to hold the infant seat securely.

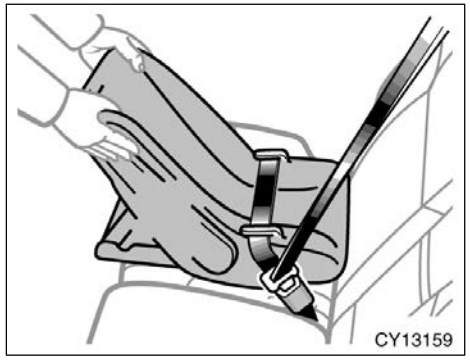

⚠ CAUTION

Push and pull the child restraint system in different directions to be sure it is secure. Follow all the installation instructions provided by its manufacturer.

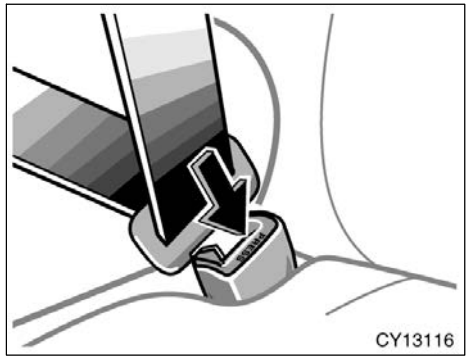

4. To remove the infant seat, press the buckle release button and allow the belt to retract completely. The belt will move freely again and be ready to work for an adult or older child passenger.

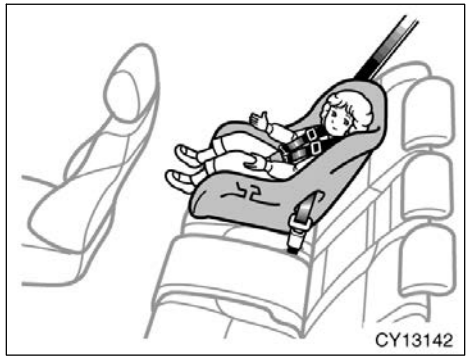

(B) CONVERTIBLE SEAT INSTALLATION

A convertible seat must be used in forward–facing or rear–facing position depending on the age and size of the child. When installing, follow the manufacturer’s instructions about the applicable age and size of the child as well as directions for installing the child restraint system.

Install the child restraint system on the front passenger seat only when it is unavoidable. Your vehicle is equipped with a front passenger occupant classification system. In order to activate the occupant classification system correctly, install the forward–facing child restraint system on the front passenger seat in the following order:

1. Turn the ignition key to the “ON” position.
2. Move the front passenger seat to the rearward position.
3. Put the child restraint system on the front passenger seat without putting your weight on the front passenger seat.
4. Insert the seat belt tab into the seat belt buckle.
5. Fully extend the shoulder belt to put it in the lock mode. When the belt is then retracted even slightly, it cannot be extended. To hold the seat securely, make sure the belt is in the lock mode before letting the belt retract.
6. While pressing the convertible seat firmly against the seat cushion and seatback, let the shoulder belt retract as far as it will go to hold the convertible seat securely.

⚠ CAUTION

Push and pull the child restraint system in different directions to be sure it is secure. Follow all the installation instructions provided by its manufacturer.

7. Put a child on the child restraint system and secure the child, complying with the instructions provided by the child restraint system manufacturer.

The occupant classification indicator light should indicate “OFF” when the ignition key is “ON” and the child is in the child restraint system after following these procedures. The “OFF” indicator indicates the SRS front passenger airbag and side airbag on the passenger side will not deploy. If the indicator light indicates “ON”, remove the child restraint system and reinstall it with the ignition key in the “ACC” or “LOCK” position. If the indicator light still indicates “ON” when the ignition key is turned to the “ON” position, then the SRS front passenger airbag and side airbag on the passenger side may deploy in an accident. Do not drive the vehicle in this condition. Remove the child restraint system and contact your Toyota dealer.

CAUTION

- **Never install a rear−facing child restraint system on the front passenger seat. A forward−facing child restraint system should only be installed on the front passenger seat when unavoidable. If you must install the child restraint system on the front passenger seat, put the seat in its most rearward position, and install the forward−facing child restraint system in the proper order. Otherwise, the front passenger occupant classification system can not detect the presence of the child restraint system and the front passenger airbag and side airbag on the front passenger seat could deploy.**

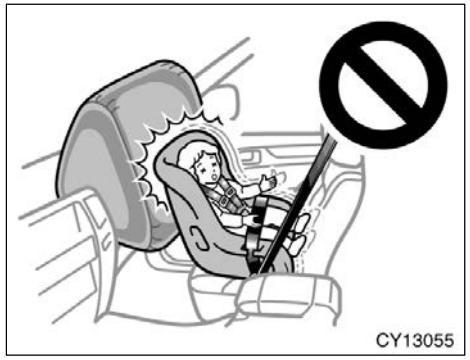

CAUTION

- **Never install a rear−facing child restraint system on the front passenger seat even if the front passenger occupant classification indicator light indicates “OFF”. In the event of an accident, the impact of the rapid inflation of the front passenger airbag could cause death or serious injury to the child if the rear−facing child restraint system is installed on the front passenger seat.**

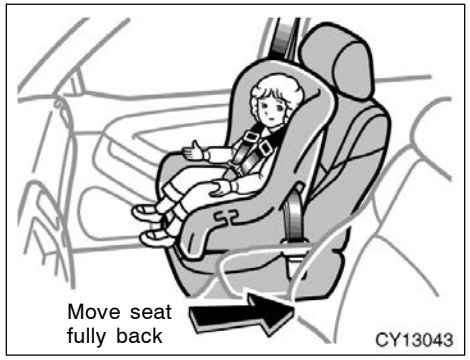

- **A forward−facing child restraint system should be allowed to be installed on the front passenger seat only when it is unavoidable. Always move the seat as far back as possible even if the front passenger occupant classification indicator light indicates “OFF”, because the front passenger airbag could inflate with considerable speed and force. Otherwise, the child may be killed or seriously injured.**

- **On vehicles with side airbags and curtain shield airbags, do not allow the child to lean his/her head or any part of his/her body against the door or the area of the seat, front or rear pillar or roof side rail from which the side airbags or curtain shield airbags deploy even if the child is seated in the child restraint system. It is dangerous if the side airbag and curtain shield airbag inflate, and the impact could cause death or serious injury to the child.**

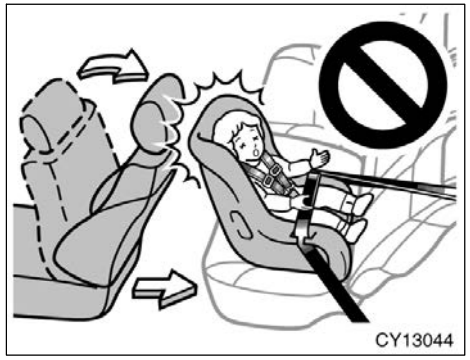

- **Do not install a child restraint system on the second (or third) seat if it interferes with the lock mechanism of the front (or second) seats. Otherwise, the child or front (or second) seat occupant(s) may be killed or seriously injured in case of sudden braking or a collision.**
- **If the driver’s seat position does not allow sufficient space for safe installation, install the child restraint system on the rear right seat.**

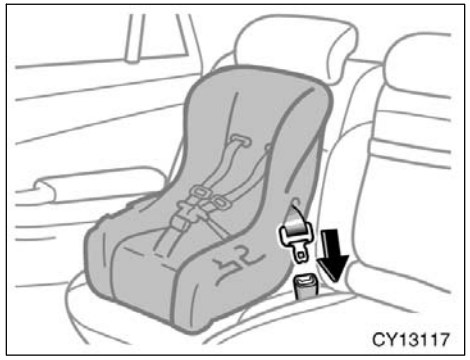

1. Run the lap and shoulder belt through or around the convertible seat following the instructions provided by its manufacturer and insert the tab into the buckle taking care not to twist the belt. Keep the lap portion of the belt tight.

⚠ CAUTION

- **After inserting the tab, make sure the tab and buckle are locked and that the lap and shoulder portions of the belt are not twisted.**
- **Do not insert coins, clips, etc. in the buckle as this may prevent your child from properly latching the tab and buckle.**
- **If the seat belt does not function normally, it cannot protect your child from death or serious injury. Contact your Toyota dealer immediately. Do not install the child restraint system on the seat until the seat belt is fixed.**

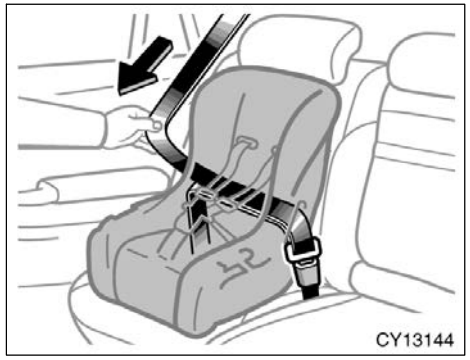

2. Fully extend the shoulder belt to put it in the lock mode. When the belt is then retracted even slightly, it cannot be extended.

To hold the convertible seat securely, make sure the belt is in the lock mode before letting the belt retract.

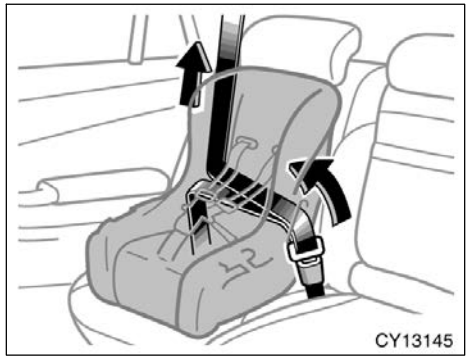

3. While pressing the convertible seat firmly against the seat cushion and seatback, let the shoulder belt retract as far as it will go to hold the convertible seat securely.

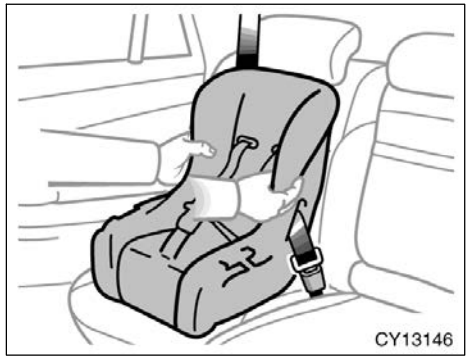

⚠ CAUTION

Push and pull the child restraint system in different directions to be sure it is secure. Follow all the installation instructions provided by its manufacturer.

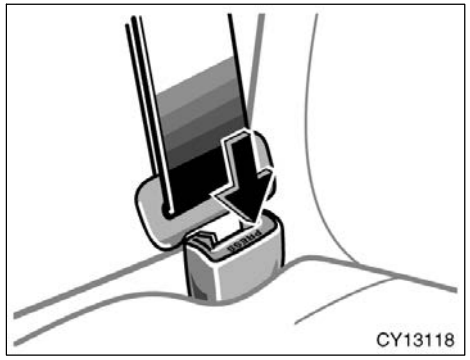

4. To remove the convertible seat, press the buckle release button and allow the belt to retract completely. The belt will move freely again and be ready to work for an adult or older child passenger.

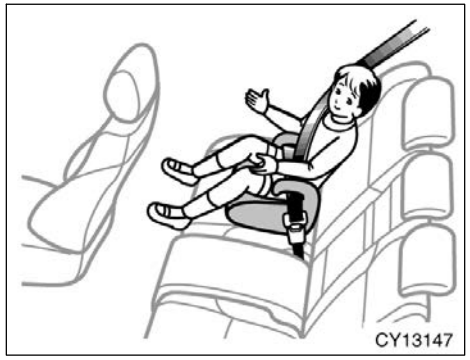

(C) BOOSTER SEAT INSTALLATION

A booster seat must be used in forward−facing position only.

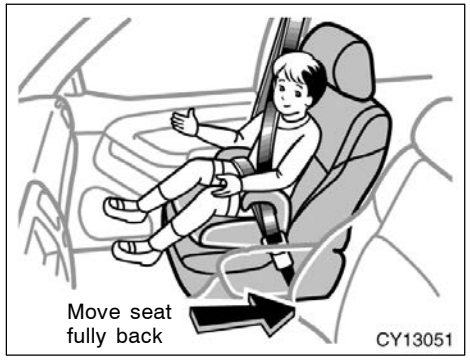

⚠ CAUTION

- **A forward−facing child restraint system should be allowed to be installed on the front passenger seat only when it is unavoidable. Always move the seat as far back as possible even if the front passenger occupant classification indicator light indicates “OFF”, because the front passenger airbag could inflate with considerable speed and force. Otherwise, the child may be killed or seriously injured.**

- **On vehicles with side airbags and curtain shield airbags, do not allow the child to lean his/her head or any part of his/her body against the door or the area of the seat, front or rear pillar or roof side rail from which the side airbags or curtain shield airbags deploy even if the child is seated in the child restraint system. It is dangerous if the side airbag and curtain shield airbag inflate, and the impact could cause death or serious injury to the child.**

1. Sit the child on a booster seat. Run the lap and shoulder belt through or around the booster seat and across the child following the instructions provided by its manufacturer and insert the tab into the buckle taking care not to twist the belt.

Make sure the shoulder belt is correctly across the child’s shoulder and that the lap belt is positioned as low as possible on the child’s hips. See “Seat belts” on page 63 in this Section for details.

⚠ CAUTION

- **Always make sure the shoulder belt is positioned across the center of child’s shoulder. The belt should be kept away from child’s neck, but not falling off child’s shoulder. Otherwise, the child may be killed or seriously injured in case of sudden braking or a collision.**
- **Both high−positioned lap belts and loose−fitting belts could cause death or serious injuries due to sliding under the lap belt during a collision or other unintended event. Keep the lap belt positioned as low on a child’s hips as possible.**
- **For child’s safety, do not place the shoulder belt under child’s arm.**
- **After inserting the tab, make sure the tab and buckle are locked and that the lap and shoulder portions of the belt are not twisted.**
- **Do not insert coins, clips, etc. in the buckle as this may prevent your child from properly latching the tab and buckle.**

- **If the seat belt does not function normally, it cannot protect your child from death or serious injury. Contact your Toyota dealer immediately. Do not install the child restraint system on the seat until the seat belt is fixed.**

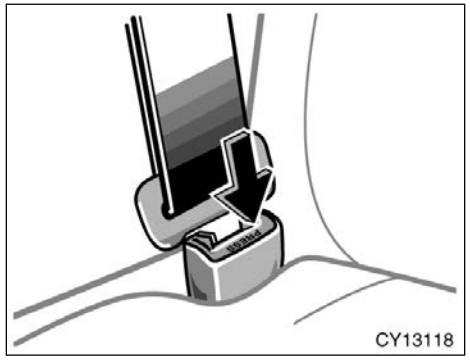

2. To remove the booster seat, press the buckle release button and allow the belt to retract.

—Using a top strap (vehicles without third seats)

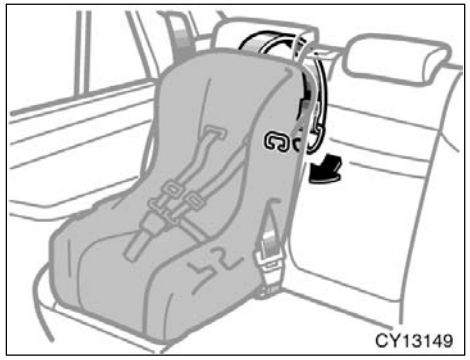

Follow the procedure below for a child restraint system that requires the use of a top strap.

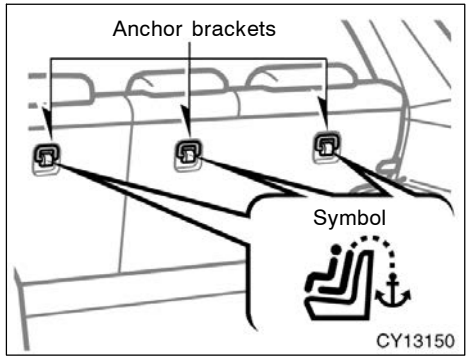

Use the anchor brackets behind the rear seatbacks to attach the top strap.

Anchor brackets are installed for each rear seating position.

This symbol indicates the location of the anchor brackets.

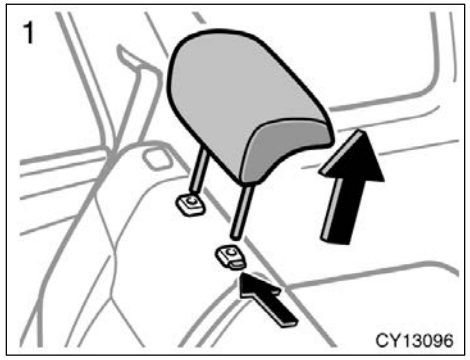

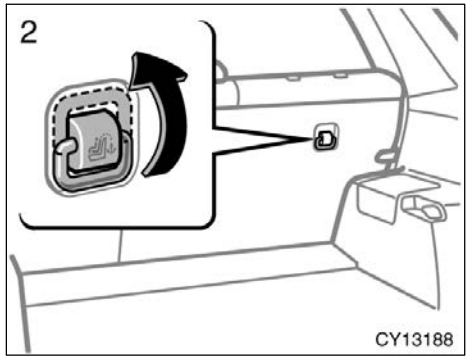

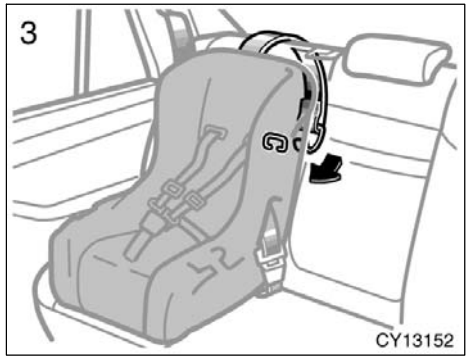

TO USE THE ANCHOR BRACKET:

1. Remove the head restraint.

2. Raise the anchor bracket.

3. Fix the child restraint system with the seat belt.

Latch the hook onto the anchor bracket and tighten the top strap.

For instructions to install the child restraint system, see “Child restraint” on page 95 in this Section.

⚠ CAUTION

Make sure the top strap is securely latched, and check that the child restraint system is secure by pushing and pulling it in different directions. Follow all the installation instructions provided by its manufacturer.

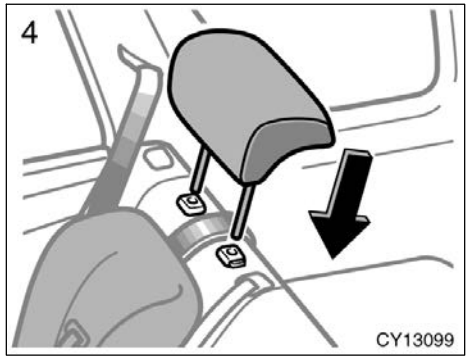

4. Replace the head restraint.

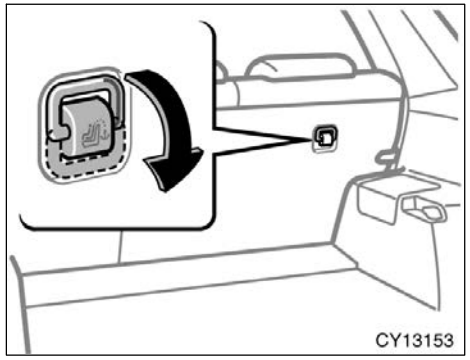

Lower the anchor bracket when it is not in use.

—Using a top strap (vehicles with third seats)

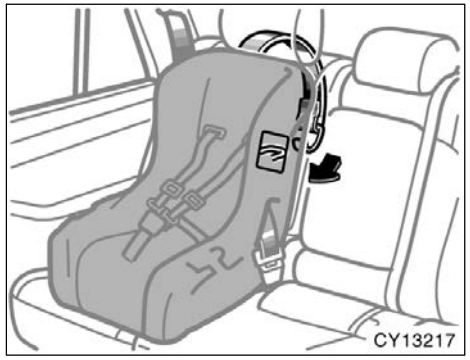

Follow the procedure below for a child restraint system that requires the use of a top strap.

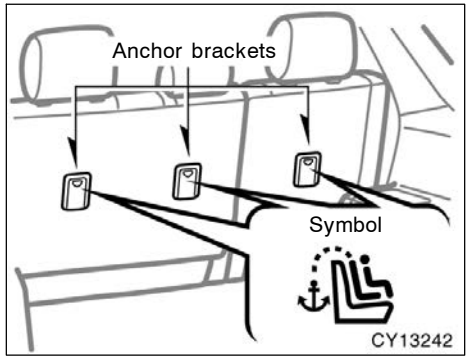

Use the anchor brackets behind the second seatbacks to attach the top strap.

Anchor brackets are installed for each second seat.

This symbol indicates the location of the anchor brackets.

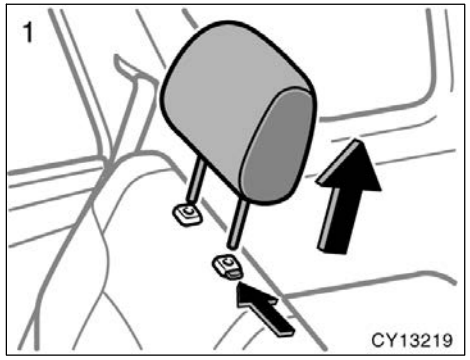

TO USE THE ANCHOR BRACKET:

1. Remove the head restraint.

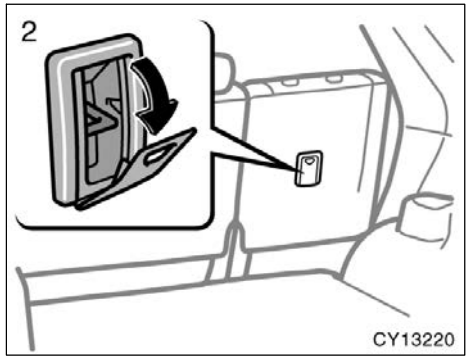

2. Open the anchor bracket cover.

3. Fix the child restraint system with the seat belt.

Latch the hook onto the anchor bracket and tighten the top strap.

For instructions to install the child restraint system, see “Child restraint” on page 95 in this Section.

⚠ CAUTION

Make sure the top strap is securely latched, and check that the child restraint system is secure by pushing and pulling it in different directions. Follow all the installation instructions provided by its manufacturer.

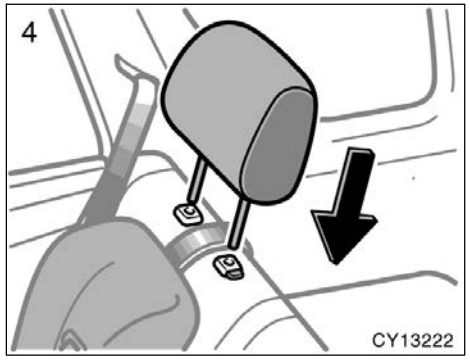

4. Replace the head restraint.

Close the anchor bracket cover when the anchor bracket is not used.

—Installation with child restraint lower anchorages (vehicles without third seats)

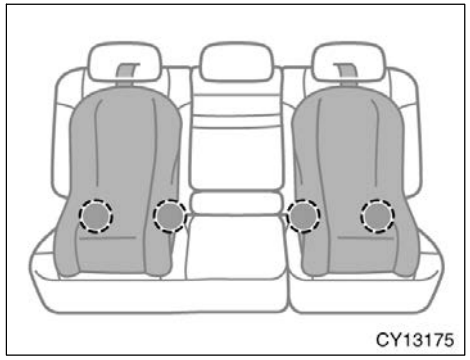

Lower anchorages for the child restraint systems complying with the FMVSS225 or CMVSS210.2 specifications are installed in the rear seats.

The anchorages are installed in the gap between the seat cushion and seatback of both outside rear seats.

Child restraint systems complying with the FMVSS213 or CMVSS213 specification can be fixed to these anchorages. In this case, it is not necessary to fix the child restraint system with a seat belt on the vehicle.

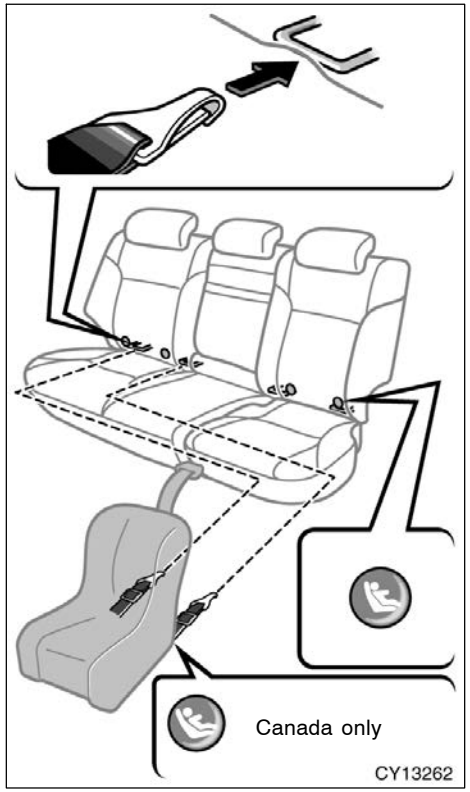

Type A

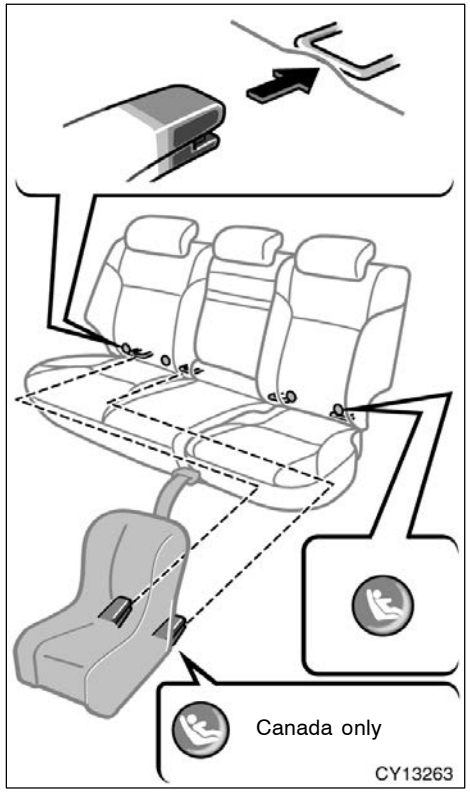

Type B

CHILD RESTRAINT SYSTEM INSTALLATION

1. **Widen the gap between the seat cushion and seatback slightly and confirm the position of the lower anchorages near the button on the seatback.**
2. **Type A—Latch the hooks of lower straps onto the anchorages and tighten the lower straps.**

   Type B—Latch the buckles onto the anchorages.

For owners in Canada—The symbol on a child restraint system indicates the presence of a lower connector system.

If your child restraint system has a top strap, it should be anchored. (For the installation of the top strap, see “—Using a top strap” on page 108 in this Section.)

For installation details, refer to the instruction manual equipped with each product.

CAUTION

- **When using the lower anchorages for the child restraint system, be sure that there are no irregular objects around the anchorages or that the seat belt is not caught.**
- **Push and pull the child restraint system in different directions to be sure it is secure. Follow all the installation instructions provided by its manufacturer.**
- **Do not install a child restraint system on the rear seat if it interferes with the lock mechanism of the front seats. Otherwise, the child or front seat occupant(s) may be killed or seriously injured in case of sudden braking or a collision.**

—Installation with child restraint lower anchorages (vehicles with third seats)

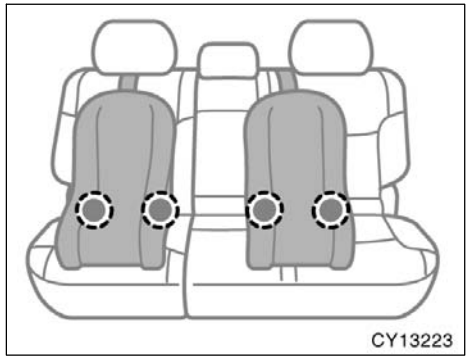

Lower anchorages for the child restraint systems complying with the FMVSS225 or CMVSS210.2 specifications are installed in the second seats.

The anchorages are installed in the seat cushion of the right side seating position and between the center and left side seating position.

Child restraint systems complying with the FMVSS213 or CMVSS213 specification can be fixed to these anchorages. In this case, it is not necessary to fix the child restraint system with a seat belt on the vehicle.

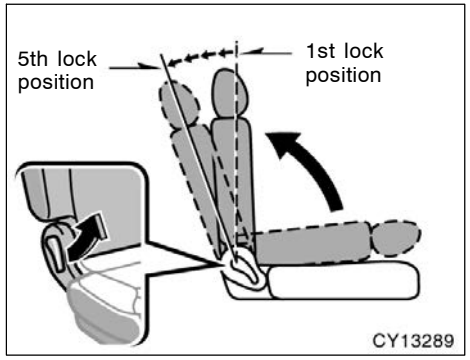

CHILD RESTRAINT SYSTEM INSTALLATION

1. **Fold down the seatback. Make sure the rear seat legs are relocked into place (folding down the seatback will disengage them) by pushing downward on the back of the seat. Adjust the seatback to the 1st lock position (most upright position) and then to the 5th lock position.**

Make sure the seat and seatback is locked securely.

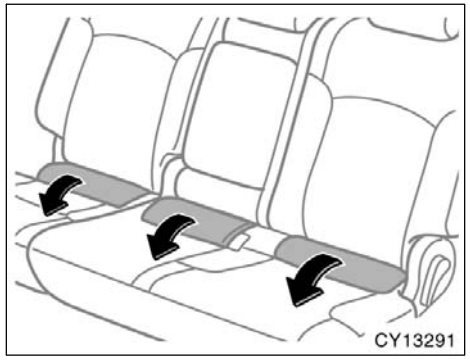

2. Take off the cover on the seat cushion.

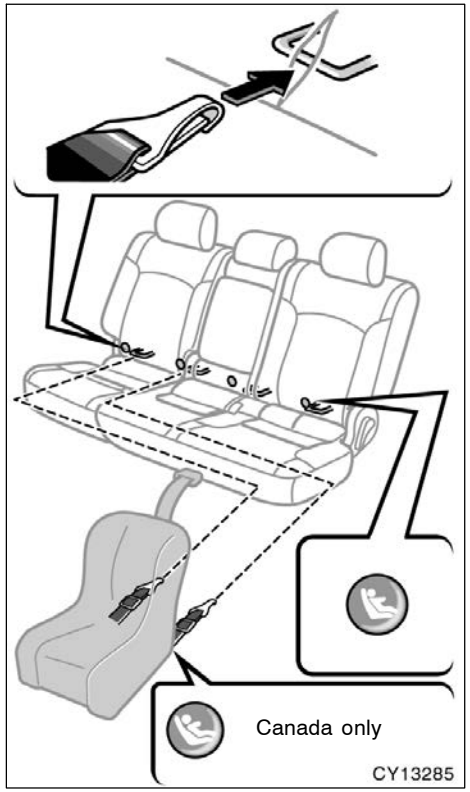

Type A

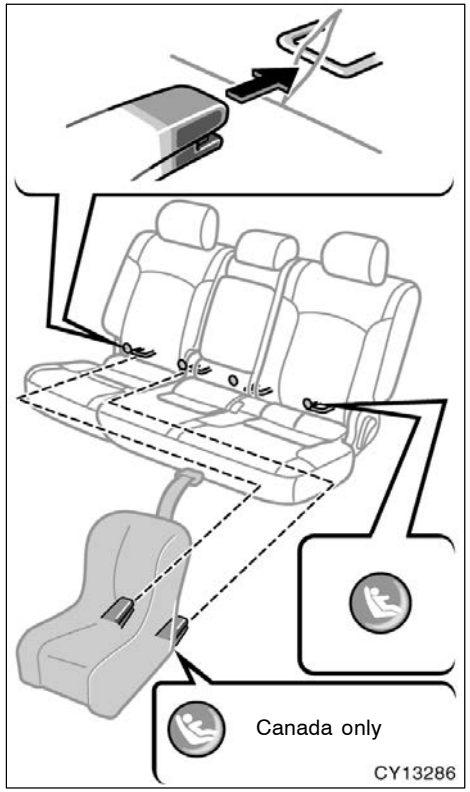

Type B

3. **Widen the slits of the seat cushion slightly and confirm the position of the lower anchorages near the button on the seatback.**
4. **Type A—Latch the hooks of lower straps onto the anchorages and tighten the lower straps.**

   Type B—Latch the buckles onto the anchorages.

For owners in Canada—The symbol on a child restraint system indicates the presence of a lower connector system.

If your child restraint system has a top strap, it should be anchored. (For the installation of the top strap, see “—Using a top strap” on page 110 in this Section.)

For installation details, refer to the instruction manual equipped with each product.

CAUTION

- **When using the lower anchorages for the child restraint system, be sure that there are no irregular objects around the anchorages or that the seat belt is not caught.**
- **Push and pull the child restraint system in different directions to be sure it is secure. Follow all the installation instructions provided by its manufacturer.**
- **After securing the child restraint system, never recline the seat.**
- **Do not install a child restraint system on the second seat if it interferes with the lock mechanism of the front seats. Otherwise, the child or front seat occupant(s) may be killed or seriously injured in case of sudden braking or a collision.**

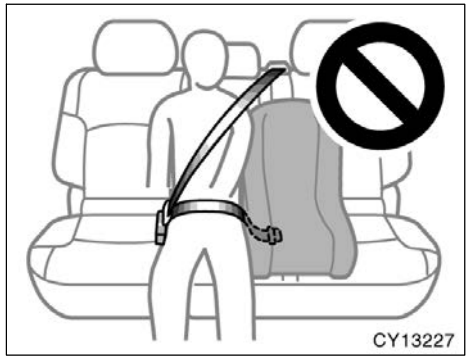

- **When using the left side lower anchorages for the child restraint system, do not sit in the center seat. The performance of the center seat belt cannot be brought out sufficiently because the belt may be high−positioned or the seat belt may be loose−fitting, posing the risk of serious injury in the case of collision.**

SECTION 1–4

OPERATION OF INSTRUMENTS AND CONTROLS

Steering wheel and Mirrors

Tilt steering wheel 118
Tilt and telescopic steering wheel 118
Outside rear view mirrors 119
Anti–glare inside rear view mirror 121
Auto anti–glare inside rear view mirror 122
Rear side–view mirrors 123
Sun visors 123

Tilt steering wheel

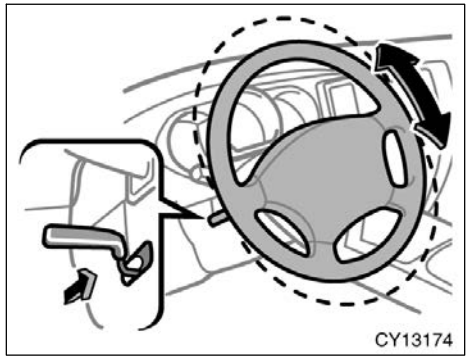

To change the steering wheel angle, hold the steering wheel, pull the lock release lever toward you, tilt the steering wheel to the desired angle and release the lever.

When the steering wheel is in a low position, it will spring up as you release the lock release lever.

⚠ CAUTION

- **Do not adjust the steering wheel while the vehicle is moving. Doing so may cause the driver to mishandle the vehicle and an accident may occur resulting in death or serious injuries.**
- **After adjusting the steering wheel, try moving it up and down to make sure it is locked in position.**

Tilt and telescopic steering wheel

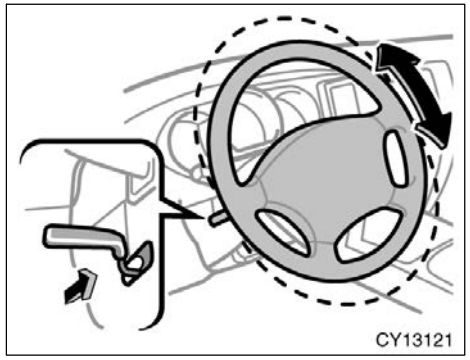

ADJUSTMENT OF STEERING WHEEL TILT

To change the steering wheel angle, hold the steering wheel, pull the lock release lever toward you, tilt the steering wheel to the desired angle and release the lever.

When the steering wheel is in a low position, it will spring up as you release the lock release lever.

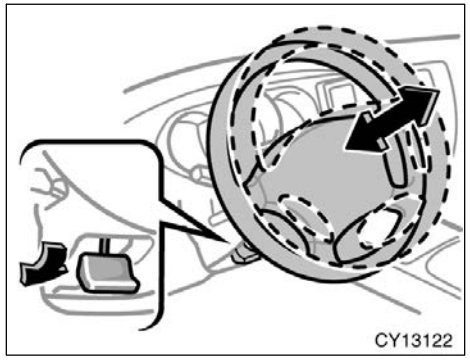

ADJUSTMENT OF TELESCOPIC STEERING COLUMN

To change the steering wheel length, push down the lock release lever, set the steering wheel to the desired length and return the lever to its original position.

⚠ CAUTION

- **Do not adjust the steering wheel while the vehicle is moving. Doing so may cause the driver to mishandle the vehicle and an accident may occur resulting in death or serious injuries.**
- **After adjusting the steering wheel, try moving it up and down or forward and rearward to make sure it is locked in position.**

Outside rear view mirrors—

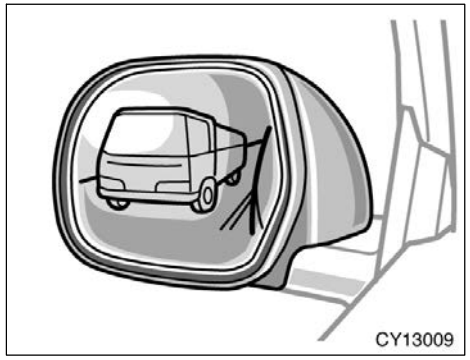

Adjust the mirror so that you can just see the side of your vehicle in the mirror.

Be careful when judging the size or distance of any object seen in the outside rear view mirror on the passenger’s side because it is a convex mirror. Any object seen in a convex mirror will look smaller and farther away than when seen in a flat mirror.

On some models, when you push the back window defogger switch, the heater panels in the outside rear view mirrors will quickly clear the surface. (See “Back window and outside rear view mirror defoggers” on page 139 in Section 1–5.)

On some models, the outside rear view mirrors are rain clearing mirrors that clear the driver’s rear view when it rains. (For details, see “Rain clearing mirrors” on page 359 in Section 5.)

⚠ CAUTION

- **Do not adjust the mirror while the vehicle is moving. Doing so may cause the driver to mishandle the vehicle and an accident may occur resulting in death or serious injuries.**
- **On some models, since the mirror surfaces can get hot, do not touch them when the defogger switch is on.**

—Power rear view mirror control

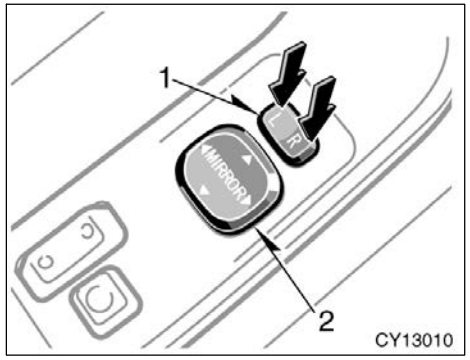

To adjust a mirror, use the switches.

1. Master switch—To select the mirror to be adjusted
   Push the switch to “L” (left) or “R” (right).
2. Control switch—To move the mirror
   Push the switch in the desired direction.

Mirrors can be adjusted when the key is in the “ACC” or “ON” position.

NOTICE

If ice should jam the mirror, do not operate the control or scrape the mirror face. Use a spray de−icer to free the mirror.

—Folding rear view mirrors

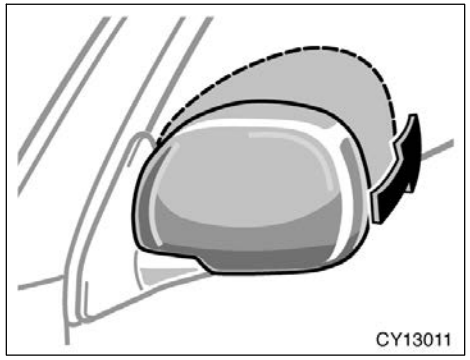

The rear view mirrors can be folded backward for parking in compact areas.

To fold the rear view mirror, push backward.

⚠ CAUTION

Do not drive with the mirrors folded backward. Both the driver and passenger side rear view mirrors must be extended and properly adjusted before driving.

Anti–glare inside rear view mirror

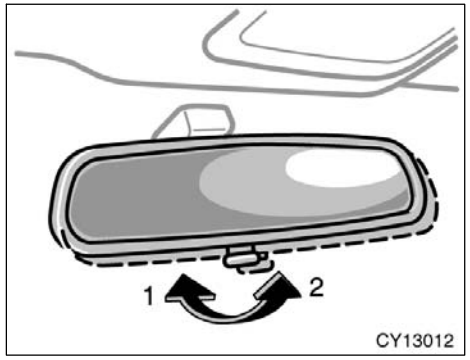

Adjust the mirror so that you can just see the rear of your vehicle in the mirror.

To reduce glare from the headlights of the vehicle behind you during night driving, operate the lever on the lower edge of the mirror.

Daylight driving—Lever at position 1

The reflection in the mirror has greater clarity at this position.

Night driving—Lever at position 2

Remember that by reducing glare you also lose some rear view clarity.

⚠ CAUTION

Do not adjust the mirror while the vehicle is moving. Doing so may cause the driver to mishandle the vehicle and an accident may occur resulting in death or serious injuries.

Auto anti–glare inside rear view mirror

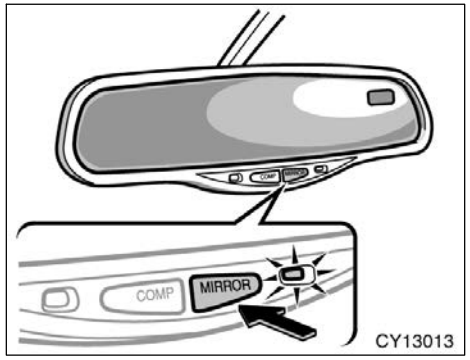

Adjust the mirror so that you can just see the rear of your vehicle in the mirror.

This mirror is equipped with auto anti–glare function. The function is designed to reduce glare from the headlights of the vehicle behind you during night driving.

When the ignition key is inserted and turned on, the inside rear view mirror always turns on in the automatic function mode.

The indicator illuminates to show you that the function is on.

In automatic function mode, if the mirror detects light from the headlights of the vehicle behind you, the mirror surface darkens slightly to reduce the reflected light.

To turn off the automatic function, push the “MIRROR” switch.

To turn on the automatic function again, push the “MIRROR” switch.

Adjust it before driving so that the rear view is in the best condition.

When the inside air temperature is low, it may take a little longer for the mirror to darken in response to the detection of headlights.

⚠ CAUTION

Do not adjust the mirror while the vehicle is moving. Doing so may cause the driver to mishandle the vehicle and an accident may occur resulting in death or serious injuries.

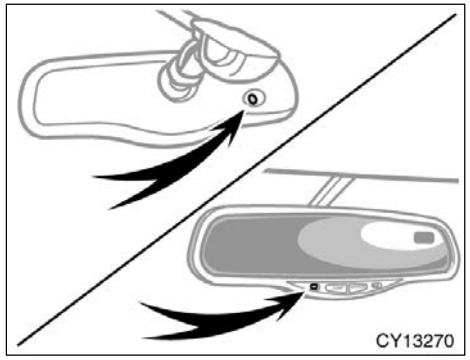

To ensure correct functioning of anti–glare mirror sensors located on both sides of the mirror, do not touch or cover the sensors with your finger or a piece of cloth, etc.

Rear side−view mirrors

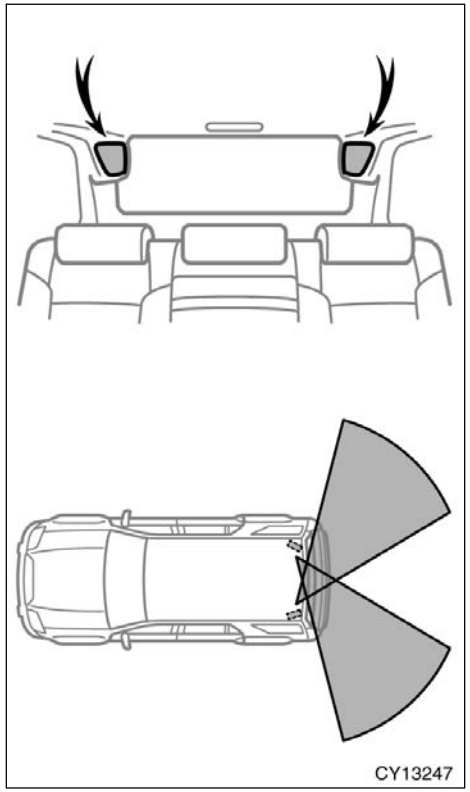

Rear side−view mirrors are useful as a secondary means of checking the area to the rear of the vehicle.

Carefully check the area to the rear of the vehicle by either looking directly or using both outside and inside rear view mirrors.

Sun visors—

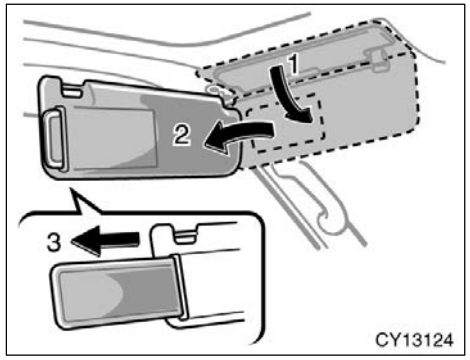

Type A

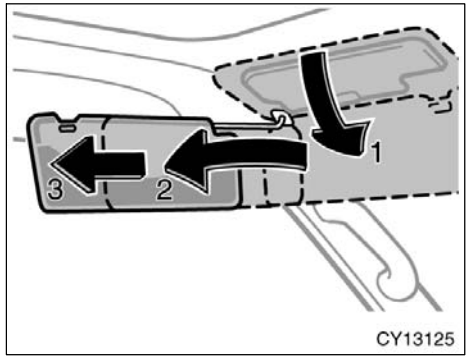

Type B

To block out glare, move the sun visor.

To block out glare from the front—Swing down the main sun visor (position 1).

To block out glare from the side—Swing down the main sun visor, remove it from the hook and swing it to the lateral side (position 2).

Type A—If glare comes from obliquely behind you, extend the plate at the end of the visor (to position 3).

Type B—If glare comes from obliquely behind you, slide the main sun visor backward (to position 3).

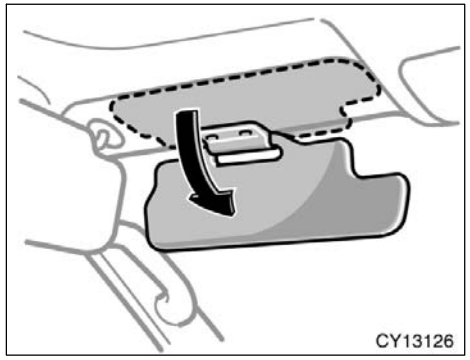

To block the glare from the front when the main sun visor is swung to the lateral side, swing down the sub visor.

⚠ CAUTION

- **Type A—Do not extend the plate at the end of the sun visor when the visor is in the position 1. It can cover the anti−glare inside rear view mirror and obstruct the rear view.**
- **Type B—Slide the main sun visor only when it is swung down to the lateral side. It can cover the anti−glare inside rear view mirror and obstruct the rear view.**

—Vanity mirrors

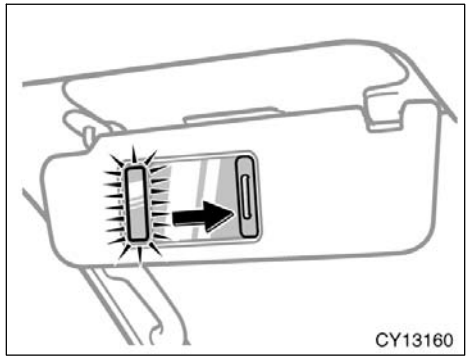

Type A

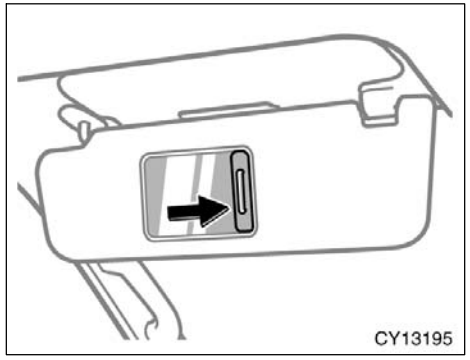

Type B

To use the vanity mirrors, swing down the main sun visor and slide the cover.

Type A—

The vanity light comes on when you slide the cover.

To prevent the battery being discharged, the light will automatically turn off when the key is removed for 30 minutes or more.

SECTION 1–5

OPERATION OF INSTRUMENTS AND CONTROLS

Lights, Wipers and Defogger

Headlights and turn signals 128
Emergency flashers 133
Instrument panel light control 133
Front fog lights 134
Interior light 134
Personal lights 135
Luggage compartment light 135
Ignition switch light 136
Running board lights 137
Windshield wipers and washer 138
Back window wiper and washer 138
Back window and outside rear view mirror defoggers 139

Headlights and turn signals (with automatic light control system)

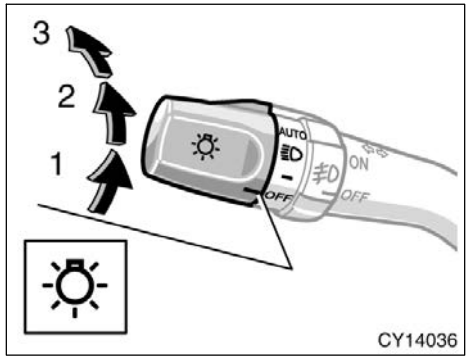

For the U.S.A.

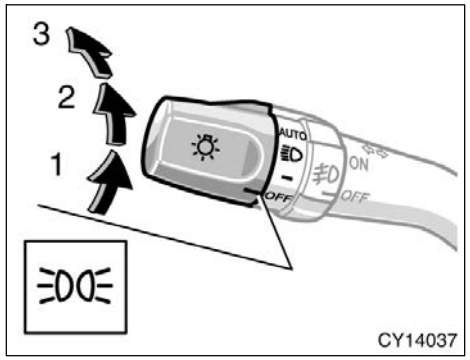

For Canada

HEADLIGHTS

To turn on the following lights: Twist the headlight/turn signal lever knob.

Position 1—Parking, tail, license plate, side marker and instrument panel lights

For Canada—The tail light indicator (green light) on the instrument panel will tell you that the tail lights are on.

Position 2—Headlights and all of the above

For the U.S.A.—The headlight low beam indicator light (green light) on the instrument panel will tell you that the low beams are on.

Position 3 (“AUTO”)—Headlights and/or all of the lights in position 1

They automatically turn on or off depending on the darkness of the surroundings.

Manually twist the knob to the position 2 to turn on the headlights if they are needed immediately when entering a dark tunnel, parking structure, etc.

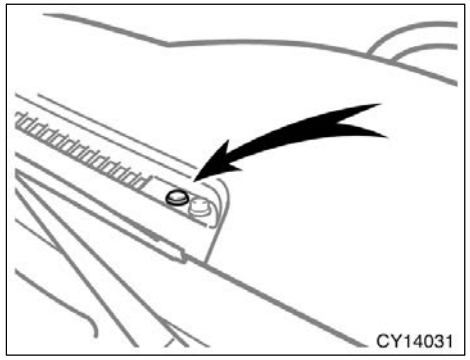

The automatic light control sensor is on the top of the driver’s side instrument panel.

Do not place anything on the instrument panel, and/or do not affix anything on the windshield to block this sensor.

The operating condition or sensitivity can be changed. For details, contact your Toyota dealer.

Automatic light cut off system

Position 1 or position 3 with the tail lights on—

The lights automatically turn off when the driver’s door is opened with the ignition key in the “ACC” or “LOCK” position.

Position 2 or 3 with the headlights on—

The lights automatically turn off after 30 seconds when all the side doors and back door are closed with the ignition key in the “ACC” or “LOCK” position.

If the “LOCK” switch of the wireless remote control transmitter is pushed twice simultaneously, the lights automatically turn off immediately.

The time before the headlights turn off can be changed. For details, contact your Toyota dealer.

If the driver’s door is kept open, the lights automatically turn off after 30 minutes.

To turn them on again, turn the key to the “ON” position or actuate the headlight switch.

If you are going to park for over one week, make sure the headlight switch is off.

NOTICE
To prevent the battery from being discharged, do not leave the lights on for a long period when the engine is not running.

Daytime running light (DRL) system (all models sold in Canada and some models sold in U.S.A.)

The Daytime Running Light (DRL) system can make it easier for others to see the front of your vehicle during the day. The DRL system can be helpful in many different driving conditions, but they can be especially helpful in the short periods after dawn and before sunset.

The DRL system will make your front turn signal lights come on when:

- The ignition is on with the engine running.
- The knob is in the “OFF” position, position 1 or position 3 with the tail lights on.
- The parking brake is released.

To turn off the DRL system, twist the knob to position 2 or position 3 with the headlights on, or turn the ignition switch off.

This DRL system can be disabled. For details, contact your Toyota dealer.

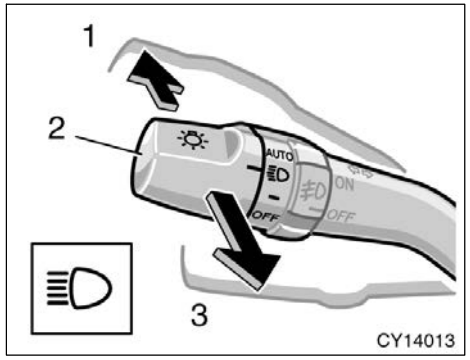

High–Low beams—For high beams, turn the headlights on and push the lever away from you (position 1). Pull the lever toward you (position 2) for low beams.

The headlight high beam indicator light (blue light) on the instrument panel will tell you that the high beams are on.

Flashing the high beam headlights (position 3)—Pull the lever all the way back. The high beam headlights turn off when you release the lever.

You can flash the high beam headlights with the knob turned to “OFF”.

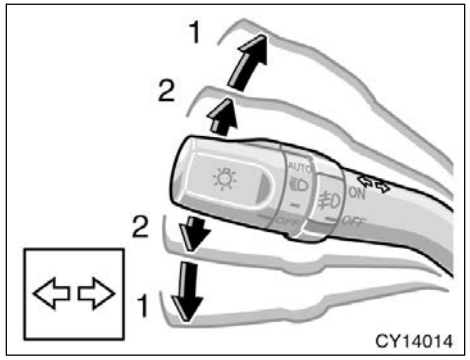

TURN SIGNALS

To signal a turn, push the headlight/ turn signal lever up or down to position 1.

The key must be in the “ON” position.

The lever automatically returns after you make a turn, but you may have to return it by hand after you change lanes.

To signal a lane change, move the lever up or down to the pressure point (position 2) and hold it.

On some models, the front turn signal lights are on during daytime running light system is on. For details, see “Daytime running light system”.

If the turn signal indicator lights (green lights) on the instrument panel flash faster than normal, a front or rear turn signal bulb is burned out.

Headlights and turn signals (without automatic light control system)

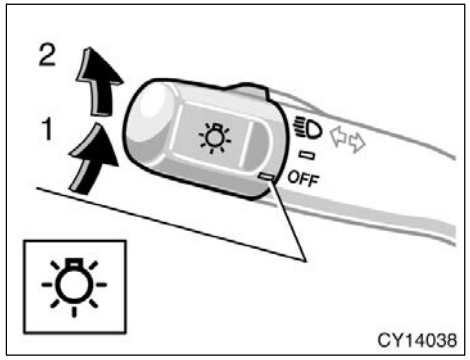

For the U.S.A.

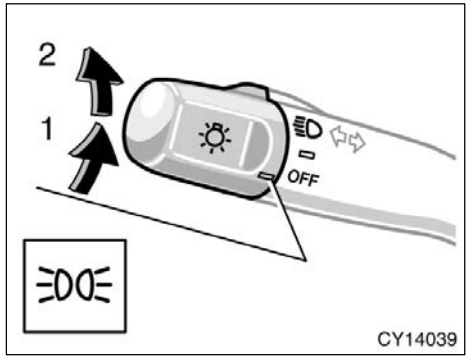

For Canada

HEADLIGHTS

To turn on the following lights: Twist the headlight/turn signal lever knob.

Position 1—Parking, tail, license plate, side marker and instrument panel lights

For Canada—The tail light indicator (green light) on the instrument panel will tell you that the tail lights are on.

Position 2—Headlights and all of the above

For the U.S.A.—The headlight low beam indicator light (green light) on the instrument panel will tell you that the low beams are on.

Automatic light cut off system

Position 1—

The lights automatically turn off when the driver’s door is opened with the ignition key in the “ACC” or “LOCK” position.

Position 2—

The lights automatically turn off after 30 seconds when all the side doors and back door are closed with the ignition key in the “ACC” or “LOCK” position.

If the “LOCK” switch of the wireless remote control transmitter is pushed twice simultaneously, the lights automatically turn off immediately.

The time before the headlights turn off can be changed. For details, contact your Toyota dealer.

If the driver’s door is kept open, the lights automatically turn off after 30 minutes.

To turn them on again, turn the key to the “ON” position or actuate the headlight switch.

If you are going to park for over one week, make sure the headlight switch is off.

NOTICE

To prevent the battery from being discharged, do not leave the lights on for a long period when the engine is not running.

Daytime running light (DRL) system (all models sold in Canada and some models sold in U.S.A.)

The Daytime Running Light (DRL) system can make it easier for others to see the front of your vehicle during the day. The DRL system can be helpful in many different driving conditions, but they can be especially helpful in the short periods after dawn and before sunset.

The DRL system will make your front turn signal lights come on when:

- The ignition is on with the engine running.
- The knob is in the “OFF” position or position 1.
- The parking brake is released.

To turn off the DRL system, twist the knob to position 2 or turn the ignition switch off.

This DRL system can be disabled. For details, contact your Toyota dealer.

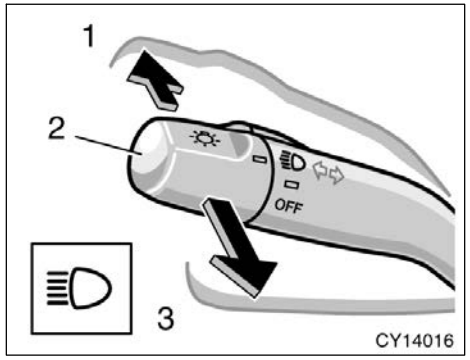

High−Low beams—For high beams, turn the headlights on and push the lever away from you (position 1). Pull the lever toward you (position 2) for low beams.

The headlight high beam indicator light (blue light) on the instrument panel will tell you that the high beams are on.

Flashing the high beam headlights (position 3)—Pull the lever all the way back. The high beam headlights turn off when you release the lever.

You can flash the high beam headlights with the knob turned to “OFF”.

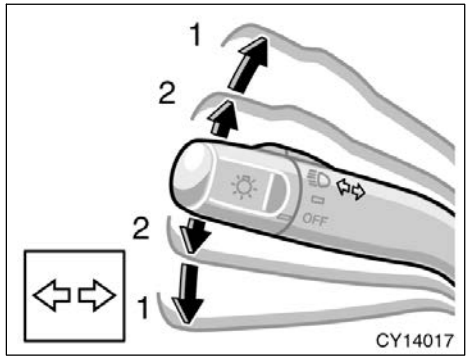

TURN SIGNALS

To signal a turn, push the headlight/turn signal lever up or down to position 1.

The key must be in the “ON” position.

The lever automatically returns after you make a turn, but you may have to return it by hand after you change lanes.

To signal a lane change, move the lever up or down to the pressure point (position 2) and hold it.

On some models, the front turn signal lights are on during daytime running light system is on. For details, see “Daytime running light system”.

If the turn signal indicator lights (green lights) on the instrument panel flash faster than normal, a front or rear turn signal bulb is burned out.

Emergency flashers

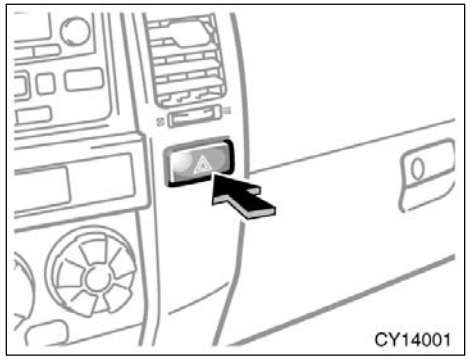

To turn on the emergency flashers, push the switch.

All the turn signal lights will flash. To turn them off, push the switch once again.

Turn on the emergency flashers to warn other drivers if your vehicle must be stopped where it might be a traffic hazard.

Always pull as far off the road as possible.

The turn signal light switch will not work when the emergency flashers are operating.

NOTICE

To prevent the battery from being discharged, do not leave the switch on longer than necessary when the engine is not running.

Instrument panel light control

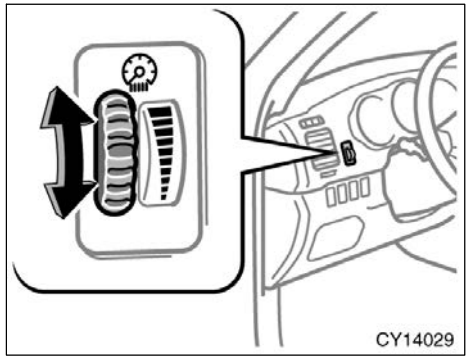

To adjust the brightness of the instrument panel lights, turn the dial.

Front fog lights

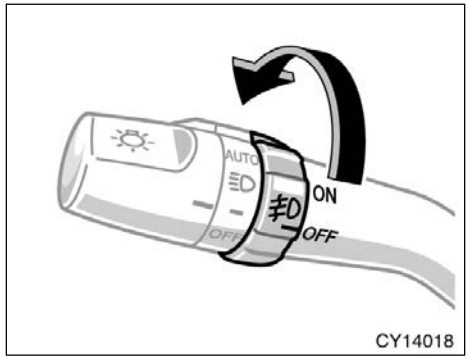

To turn on the front fog lights, twist the band of the headlight and turn signal switch lever. They will come on only when the headlights are on low beam.

Interior light

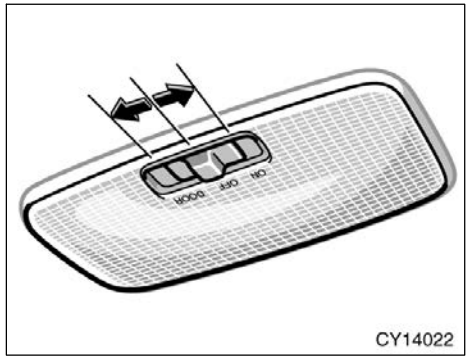

Without rear seat audio system

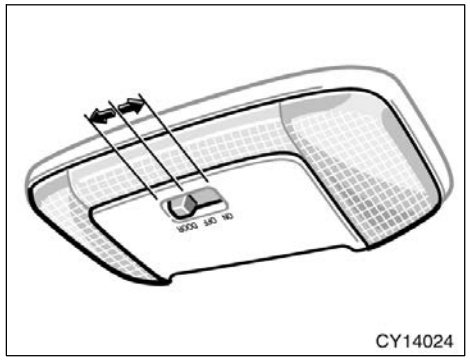

With rear seat audio system

To turn on the interior light, slide the switch.

The interior light switch has the following positions:

“ON”—Keeps the light on all the time.

“OFF”—Turns the light off.

“DOOR”—Turns the light on when any of the side doors and back door is opened. The light goes off when all the side doors and back door are closed.

ILLUMINATED ENTRY SYSTEM

Door linked operation—When the switch is in the “DOOR” position and any of the side doors and back door is opened, the light will come on. After all the side doors and back door are closed, the light remains on for about 15 seconds before fading out.

Ignition switch linked operation—When the switch is in the “DOOR” position, and the ignition switch is turned to “LOCK”, the light will come on. The light remains on for about 15 seconds before fading out.

However, in the following cases, the light goes off immediately.

- All the side doors and back door are closed when the ignition key is in the “ACC” or “ON” position.

- All the side doors and back door are closed and locked.

When any of the side doors and back door is unlocked using either the key or the wireless remote control transmitter, the light will come on and remain on for about 15 seconds before fading out.

The following adjustments can be made in this system. For details, contact your Toyota dealer.

- Cancelling the door key or the wireless remote control transmitter linked operation
- Changing the duration of lighting

To prevent the battery being discharged, the lights will automatically turn off when the key is removed and the door is left opened with the switch at the “DOOR” position for 30 minutes or more.

Personal lights

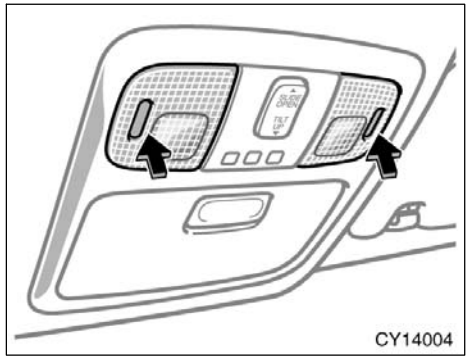

To turn on the personal lights, push the lens. To turn the lights off, push the lens once again.

Luggage compartment light

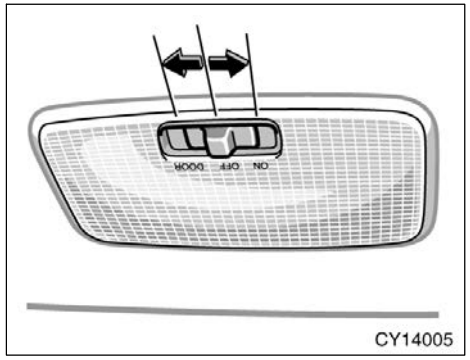

To turn on the luggage compartment light, slide the switch.

The luggage compartment light switch has the following positions:

“ON”—Keeps the light on all the time.

“OFF”—Turns the light off.

“DOOR”—Turns the light on when any of the side doors and back door is opened. The light goes off when all the side doors and back door are closed.

ILLUMINATED ENTRY SYSTEM

Door linked operation—When the switch is in the “DOOR” position and any of the side doors and back door is opened, the light will come on. After all the side doors and back door are closed, the light remains on for about 15 seconds before fading out.

Ignition switch linked operation—When the switch is in the “DOOR” position, and the ignition switch is turned to “LOCK”, the light will come on. The light remains on for about 15 seconds before fading out.

However, in the following cases, the light goes off immediately.

- All the side doors and back door are closed when the ignition key is in the “ACC” or “ON” position.
- All the side doors and back door are closed and locked.

When any of the side doors and back door is unlocked using either the key or the wireless remote control transmitter, the light will come on and remain on for about 15 seconds before fading out.

The following adjustments can be made in this system. For details, contact your Toyota dealer.

- Cancelling the door key or the wireless remote control transmitter linked operation
- Changing the duration of lighting

To prevent the battery being discharged, the lights will automatically turn off when the key is removed and the door is left opened with the switch at the “DOOR” position for 30 minutes or more.

Ignition switch light

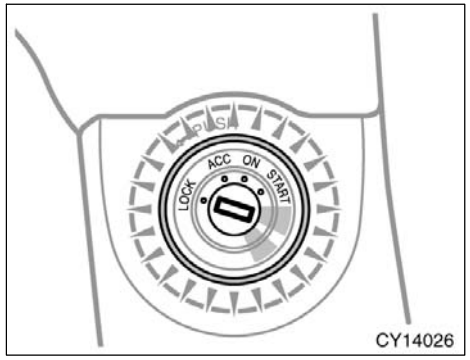

For easy access to the ignition switch, the ignition switch light comes on when any of the side doors and back door is opened or when the ignition switch is turned to the “LOCK” position.

The light remains on for about 15 seconds after all the side doors and back door are closed.

However, in the following cases, the light goes off immediately.

- All the side doors and back door are closed when the ignition key is in the “ACC” or “ON” position.
- All the side doors and back door are closed and locked.

When any of the side doors and back door is unlocked using either the key or the wireless remote control transmitter, the light will come on and remain on for about 15 seconds before fading out.

The following adjustments can be made in this system. For details, contact your Toyota dealer.

- Cancelling the door key or the wireless remote control transmitter linked operation
- Changing the duration of lighting

To prevent the battery being discharged, the light will automatically turn off when the key is removed and the door is left opened for 30 minutes or more.

Running board lights

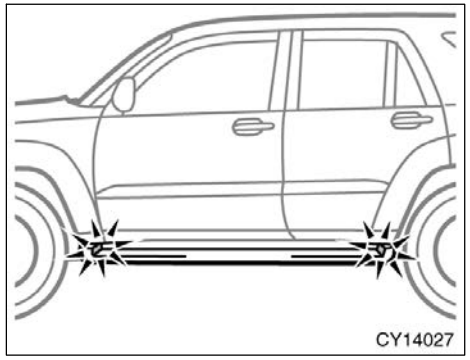

Lighting the running boards and the ground helps you easily to get in and out of the vehicle in the night. The lights come on when any of the side doors is opened.

The lights remain on for about 15 seconds after all the side doors are closed.

However, in the following cases, the light go off immediately.

- All the side doors and back door are closed and locked.
- The vehicle speed reaches 8 km/h (5 mph) or higher.

When any of the side doors and back door is unlocked using either the key or the wireless remote control transmitter, the lights will come on and remain on for about 15 seconds before fading out.

To prevent the battery being discharged, the light will automatically turn off when the key is removed and the door is left opened for 30 minutes or more.

Windshield wipers and washer

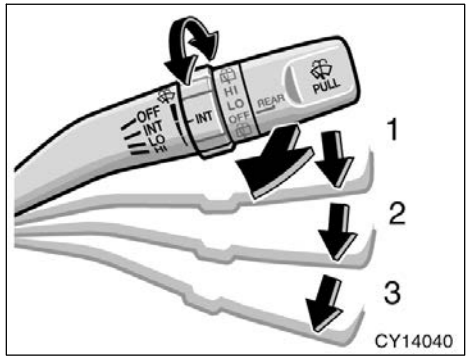

To turn on the windshield wipers, move the lever to the desired setting.

The key must be in the “ON” position.

Lever position	Speed setting
Position 1	Intermittent
Position 2	Slow
Position 3	Fast

The “INT” band lets you adjust the wiping time interval when the wiper lever is in the intermittent position (position 1). Twist the band upward to increase the time between sweeps, and downward to decrease it.

To squirt washer fluid, pull the lever toward you.

If the windshield wipers are off, they will operate a couple of times after the washer squirts.

For instructions on adding washer fluid, see “Adding washer fluid” on page 393 in Section 7–3.

In freezing weather, warm the windshield with the defroster before using the washer. This will help prevent the washer fluid from freezing on your windshield, which can block your vision.

NOTICE

Do not operate the wipers if the windshield is dry. It may scratch the glass.

Back window wiper and washer

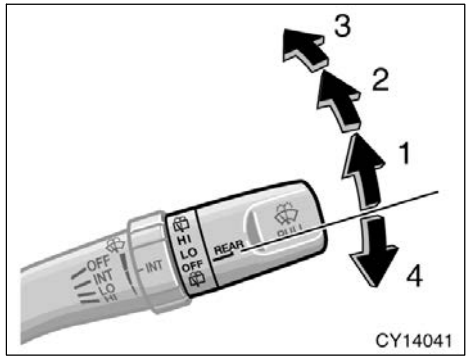

To turn on the back window wiper, twist the lever knob upward.

The key must be in the “ON” position.

Lever position	Speed setting
Position 1	Intermittent
Position 2	Normal

To squirt washer fluid on the back window, twist the knob upward or downward as far as it will go (position 3 or 4). The knob automatically returns from these positions after you release it. The back window wiper operates while the washer squirts.

For instructions on adding washer fluid, see “Adding washer fluid” on page 393 in Section 7–3.

If the back window is not fully closed, the back window wiper and washer will not work. Make sure the back window is fully closed when using the back window wiper and washer.

NOTICE

Do not operate the back window wiper if the back window is dry. It may scratch the glass.

Back window and outside rear view mirror defoggers

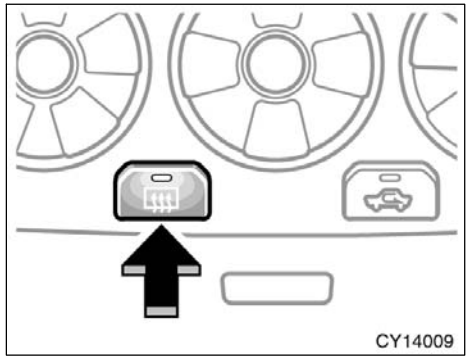

To defog or defrost the back window, push the switch with the back window closed.

The key must be in the “ON” position.

The thin heater wires on the inside of the back window will quickly clear the surface. An indicator light will illuminate to indicate the defogger is operating.

On some models, heater panels in the outside rear view mirrors will also quickly clear the surfaces.

Push the switch once again to turn the defoggers off.

The system will automatically shut off after the defoggers have operated about 15 minutes.

If the back window is not fully closed, the back window defogger will not work. Make sure the back window is fully closed when using the back window defogger.

If the back window is opened while the defogger is working, the defogger will automatically turn off. Even if the back window is fully closed after that, the defogger will not automatically turn on.

Make sure you turn the defoggers off when the surfaces are clear. Leaving the defoggers on for a long time could cause the battery to discharge, especially during stop–and–go driving. The defoggers are not designed for drying rain water or for melting snow.

⚠ CAUTION

On some models, since the mirror surfaces can get hot, do not touch them when the defogger switch is on.

NOTICE

When cleaning the inside of the back window, be careful not to scratch or damage the heater wires or connectors.

SECTION 1–6

OPERATION OF INSTRUMENTS AND CONTROLS

Gauges, Meters and Service reminder indicators

Fuel gauge 142
Engine coolant temperature gauge 142
Tachometer 143
Odometer and two trip meters 144
Service reminder indicators and warning buzzers 145

Fuel gauge

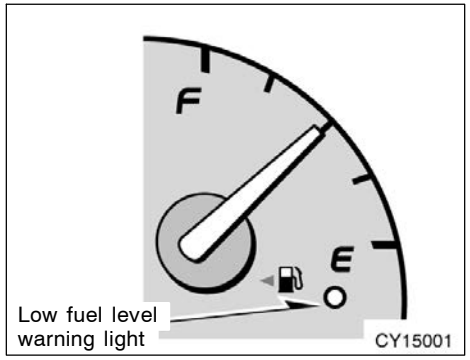

The gauge indicates the approximate quantity of fuel remaining in the tank when the ignition switch is on.

Nearly full—Needle at “F”
Nearly empty—Needle at “E”

It is a good idea to keep the tank over 1/4 full.

The needle moves when braking, accelerating or making turns. This is caused by the movement of the fuel in the tank.

If the fuel level approaches “E” or the low fuel level warning light comes on, fill the fuel tank as soon as possible.

On inclines or curves, due to the movement of fuel in the tank, the fuel gauge needle may fluctuate or the low fuel level warning light may come on earlier than usual.

If the fuel tank is completely empty, the malfunction indicator lamp comes on. Fill the fuel tank immediately.

The indicator lamp goes off after driving several times. If the indicator lamp does not go off, contact your Toyota dealer as soon as possible.

Engine coolant temperature gauge

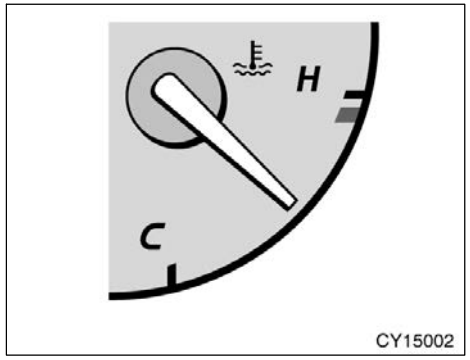

The gauge indicates the engine coolant temperature when the ignition switch is on. The engine operating temperature will vary with changes in weather and engine load.

If the needle moves into the red zone, your engine is too hot. If your vehicle overheats, stop your vehicle and allow the engine to cool.

Your vehicle may overheat during severe operating conditions, such as:

- Driving up a long hill on a hot day.
- Reducing speed or stopping after high speed driving.

- Idling for a long period with the air conditioning on in stop–and–go traffic.
- Towing a trailer.

NOTICE

- ***Do not remove the thermostat in the engine cooling system as this may cause the engine to overheat. The thermostat is designed to control the flow of coolant to keep the temperature of the engine within the specified operating range.***
- ***Do not continue driving with an overheated engine. See “If your vehicle overheats” on page 334 in Section 4.***

Tachometer

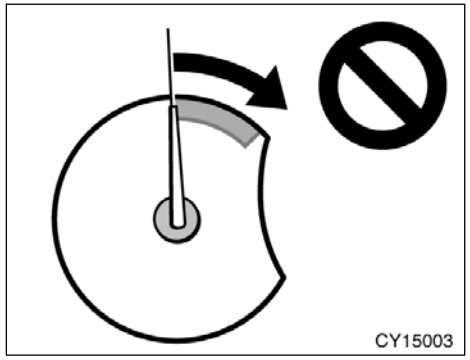

The tachometer indicates engine speed in thousands of rpm (revolutions per minute). Use it while driving to select correct shift points and to prevent engine lugging and over–revving.

Driving with the engine running too fast causes excessive engine wear and poor fuel economy. Remember, in most cases the slower the engine speed, the greater the fuel economy.

NOTICE

Do not let the indicator needle get into the red zone. This may cause severe engine damage.

Odometer and two trip meters

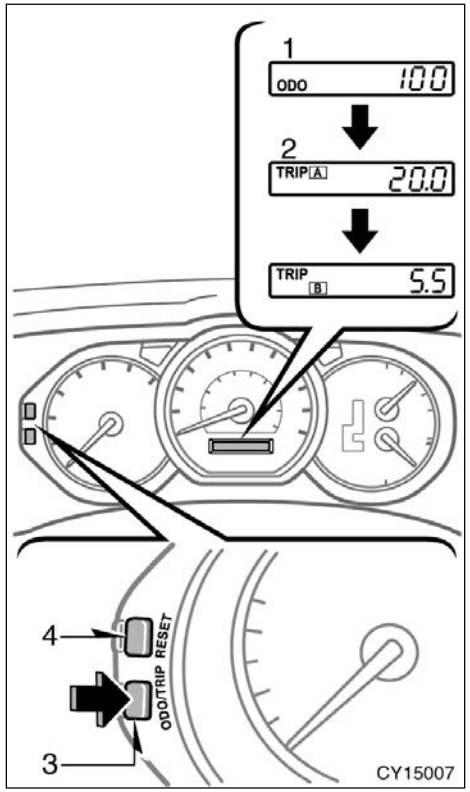

This meter displays the odometer and two trip meters.

1. Odometer—Shows the total distance the vehicle has been driven.
2. Two trip meters—Show two different distances independently driven since the last time each trip meter was set to zero.

   You can use one trip meter to calculate the fuel economy and the other to measure the distance on each trip. All trip meter data is cancelled if the electrical power source is disconnected.
3. Odometer/two trip meter changeover button—Switches the meter display.

   To change the meter display, quickly push and release the changeover button. The meter display changes in the order from the odometer to trip meter A to trip meter B, then back to the odometer each time you push.
4. Trip meter reset button—Resets the two trip meters to zero.

   To reset the trip meter A to zero, display the meter A reading, then push and hold the button until the meter is set to zero. The same process can be applied for resetting the trip meter B.

Service reminder indicators and warning buzzers

If the indicator or buzzer comes on...		Do this.
(a)	BRAKE (indicator and buzzer)	If parking brake is off, stop immediately and contact Toyota dealer.
(b)	(indicator and buzzer)	Fasten driver’s seat belt.
(c)	PASSENGER	Fasten front passenger’s seat belt.
(d)		Stop and check.
(e)		Stop and check.
(f)	CHECK	Take vehicle to Toyota dealer.
(g)	Low fuel level warning light	Fill up tank.

If the indicator or buzzer comes on...		Do this.
(h)	**MAINT**	Replace engine oil.
(i)	**ABS** or	Take vehicle to Toyota dealer. If brake system warning light is also on, stop immediately and contact Toyota dealer.
(j)	**VSC TRAC**	Take vehicle to Toyota dealer.
(k)		Close all side doors and back door.
(l)		Take vehicle to Toyota dealer immediately.
(m)	**A/T OIL TEMP** (four–wheel drive models)	Stop and check.
(n)		Adjust tire pressure. If the light remains, contact Toyota dealer.

If the indicator or buzzer comes on...		Do this.
(o)		Add washer fluid.
(p)	Key reminder buzzer	Remove key.

(a) Brake System Warning Light and Buzzer

This light comes on in the following cases when the ignition key is in the “ON” position.

- **When the parking brake is applied...**

This light comes on for a few seconds when the ignition key is turned to the “ON” position on even after the parking brake is released.

- **When the brake fluid level is low...**

CAUTION

It is dangerous to continue driving normally when the brake fluid level is low.

- **When the hydraulic brake booster fails...**

If the hydraulic booster causes a problem resulting in poor braking performance, the warning light comes on and buzzer sounds continuously.

Have your vehicle checked at your Toyota dealer in the following cases:

- The light does not come on even if the parking brake is applied when the ignition key is in the “ON” position.
- The light does not come on even if the ignition key is turned on with the parking brake released.

A warning light turning on briefly during operation does not indicate a problem.

CAUTION

If any of the following conditions occurs, immediately stop your vehicle at a safe place and contact your Toyota dealer.

- **The light does not turn off even after the parking brake is released while the engine is running.**
- **The warning buzzer comes on together with the warning light.**

  In either case, this can indicate that the brakes may not work properly and your stopping distance will become longer. Depress the brake pedal firmly and bring the vehicle to an immediate stop.

- **The brake system warning light remains on together with the “ABS” warning light.**

  In this case, not only the anti–lock brake system will fail but also the vehicle will become extremely unstable during braking.

Any of the following conditions may occur, but do not indicate the malfunction:

- The light may stay on for about 60 seconds after the ignition key is turned to the “ON” position. It is normal if it turns off after a while.
- Depressing the brake pedal repeatedly may turn on the warning light and buzzer. It is normal if the light turns off and the buzzer stops sounding after a few seconds.
- You may hear a small sound in the engine compartment after the engine is started or the brake pedal is depressed repeatedly. This is a pump pulsating sound of the brake system, and it is not a malfunction.

(b) Driver’s Seat Belt Reminder Light and Buzzer

The light and buzzer act as a reminder to buckle up the driver’s seat belt.

Once the ignition key is turned to “ON” or “START”, the reminder light flashes and buzzer come on if the driver’s seat belt is not fastened. Unless the driver fastens the belt, the light continues flashing and the buzzer sounds for about 4 to 8 seconds.

(c) Front Passenger’s Seat Belt Reminder Light

The light acts as a reminder to have the front passenger buckle up the seat belt.

Once the ignition key is turned to “ON” or “START”, the reminder light flashes if a passenger sits in the front passenger seat and does not fasten the seat belt.

If luggage or other load is placed on the front passenger seat, depending on its weight, the reminder light may flash.

(d) Discharge Warning Light

This light warns that the battery is being discharged.

If it comes on while you are driving, there is a problem somewhere in the charging system.

The engine ignition will continue to operate, however, until the battery is discharged. Turn off the air conditioning, blower, radio, etc., and drive directly to the nearest Toyota dealer or repair shop.

NOTICE
Do not continue driving if the engine drive belt is broken or loose.

(e) Low Engine Oil Pressure Warning Light

This light warns that the engine oil pressure is too low.

If it flickers or stays on while you are driving, pull off the road to a safe place and stop the engine immediately. Call a Toyota dealer or qualified repair shop for assistance.

The light may occasionally flicker when the engine is idling or it may come on briefly after a hard stop. There is no cause for concern if it then goes out when the engine is accelerated slightly.

The light may come on when the oil level is extremely low. It is not designed to indicate low oil level, and the oil level must be checked using the level dipstick.

NOTICE
Do not drive the vehicle with the warning light on—even for one block. It may ruin the engine.

(f) Malfunction Indicator Lamp

This lamp comes on when the ignition key is turned to the “ON” position and goes off after the engine starts. This means that the warning light system is operating properly.

If the lamp remains on, or the lamp comes on while driving, first check the followings.

- Empty fuel tank

  If the fuel tank is empty, refuel immediately.

- Loose fuel tank cap

  If the fuel tank cap is loose, securely tighten it.

These cases are temporary malfunctions. The malfunction indicator lamp will go off after taking several driving trips.

If the lamp does not go off even after several trips, contact your Toyota dealer as soon as possible.

If the fuel tank is not empty or the fuel tank cap is not loose...

- There is a problem somewhere in the engine, emission control system, electronic throttle control system, automatic transmission electrical system or warning light system itself.

Contact your Toyota dealer as soon as possible to service the vehicle.

If engine speed does not increase when the accelerator pedal is depressed, there may be a problem somewhere in the electronic throttle control system.

At this time, vibration may occur. However, if you depress the accelerator pedal more firmly and slowly, you can drive your vehicle at low speeds. Have your vehicle checked by your Toyota dealer as soon as possible.

Even if the abnormality of the electronic throttle control system is corrected during low speed driving, the system may not be recovered until the engine is stopped and the ignition key is turned to the “ACC” or “LOCK” position.

⚠ CAUTION

Be especially careful to prevent erroneous pedal operation.

Emissions inspection and maintenance (I/M) programs

Your vehicle may not pass a state emission inspection if the malfunction indicator lamp remains on. Contact your Toyota dealer to check your vehicle’s emission control system and OBD (On–Board Diagnostics) system before taking your vehicle for the inspection.

For details, see “Emissions Inspection and Maintenance (I/M) programs” on page 366 in Section 6.

(g) Low Fuel Level Warning Light

This light comes on when the fuel level in the tank becomes nearly empty. Fill up the tank as soon as possible.

On inclines or curves, due to the movement of fuel in the tank, the low fuel level warning light may come on earlier than usual.

(h) Engine Oil Replacement Reminder Light (for vehicles sold in U.S.A.)

This light acts as a reminder to replace the engine oil.

This light will come on when the ignition key is turned to “ON” and will go off after about a few seconds.

When you drive for about 7200 km (4500 miles) after the engine oil replacement, this light illuminates for about 3 seconds and then flashes for about 12 seconds with the ignition key turned to the “ON” position. If you continue driving without the engine oil replacement, and if the driving range exceeds 8000 km (5000 miles), the light will come on after the ignition key is turned to the “ON” position. The light will remain on thereafter.

If the light is flashing, we recommend that you replace the engine oil at an early opportunity depending on the driving and road condition. If the light comes on, replace it as soon as possible.

You need to reset the light after the engine oil replacement. Reset the light by following the procedure below:

1. Turn the ignition key to the “ACC” or “LOCK” position with the odometer reading shown. (For details, see “Odometer and two trip meters” on page 144 in this Section.)
2. Turn the ignition key to the “ON” position while holding down the trip meter reset button.

Hold down the button until the light goes off. Before the light goes off, it illuminates for 3 seconds, flashes for 2 seconds and illuminates for 1 second.

If the system fails to reset, the light will remain flashing.

(i) “ABS” Warning Light

The light comes on when the ignition key is turned to the “ON” position. If the anti–lock brake system and the brake assist system work properly, the light turns off after a few seconds. Thereafter, if either of the systems malfunctions, the light comes on again.

When the “ABS” warning light is on (and the brake system warning light is off), the following systems do not operate, but the brake system still operates conventionally.

- Anti–lock brake system
- Brake assist system
- Traction control system (two–wheel drive models)
- Active traction control system (four–wheel drive models)
- Vehicle stability control system
- “AUTO LSD” system (two–wheel drive models)
- Downhill assist control system (four–wheel drive models)
- Hill–start assist control system

When the “ABS” warning light is on (and the brake system warning light is off), the anti–lock brake system does not operate, so that the wheels will lock up during a sudden braking or braking on slippery road surfaces.

If either of the following conditions occurs, this indicates a malfunction somewhere in the components monitored by the warning light system. Contact your Toyota dealer as soon as possible to service the vehicle.

- The light does not come on when the ignition key is turned to the “ON” position, or remains on.
- The light comes on while you are driving.

A warning light turning on briefly during operation does not indicate a problem.

⚠ CAUTION

If the “ABS” warning light remains on together with the brake system warning light, immediately stop your vehicle at a safe place and contact your Toyota dealer.

In this case, not only the anti–lock brake system will fail but also the vehicle will become extremely unstable during braking.

Either of the following conditions may occur, but do not indicate a malfunction:

- The light may stay on for about 60 seconds after the ignition key is turned to the “ON” position. It is normal if it turns off after a while.
- Depressing the brake pedal repeatedly may turn on the light. It is normal if it turns off after a few seconds.

(j) “VSC TRAC” Warning Light

The light warns that there is a problem somewhere in the following.

- Vehicle stability control system
- Traction control system (two–wheel drive models)
- Active traction control system (four–wheel drive models)
- “AUTO LSD” system (two–wheel drive models)
- Downhill assist control system (four–wheel drive models)
- Hill–start assist control system

The light will come on when the ignition key turned to “ON”, and will go off after a few seconds.

It is not a malfunction that the warning light may stay on for 60 seconds after the ignition key is turned to the “ON” position.

Depressing the brake pedal repeatedly may turn on the lights. It is normal if they go out after a few seconds.

If the light comes on while driving, the above mentioned systems do not work. However, as conventional braking operates when applied, there is no problem to continue your driving.

In the following cases, contact your Toyota dealer:

- The warning light does not come on after the ignition key is turned to “ON”.
- The warning light remains on after the ignition key is turned to “ON”.
- The warning light comes on while driving.

When the brake fluid level is too low, the above mentioned systems will not operate and the warning light comes on.

(k) Open Door Warning Light

This light remains on until all the side doors and back door are completely closed.

(l) SRS Warning Light

This light will come on when the ignition key is turned to the “ON” position. After about 6 seconds, the light will go off. This means the system of the airbag and front seat belt pretensioner are operating properly.

This warning light system monitors the airbag sensor assembly, front airbag sensors, side and curtain shield airbag sensors, curtain shield airbag sensors, driver’s seat position sensor, driver’s seat belt buckle switch, front passenger occupant classification system and indicator light, front passenger’s seat belt buckle switch, seat belt pretensioner assemblies, inflators, warning light, “RSCA OFF” indicator light, interconnecting wiring and power sources.

If either of the following conditions occurs, this indicates a malfunction somewhere in the parts monitored by the warning light system. Contact your Toyota dealer as soon as possible to service the vehicle.

- The light does not come on when the ignition key is turned to the “ON” position or remains on for more than 6 seconds or flashes.
- The light comes on or flashes while driving.

(m) Automatic Transmission Fluid Temperature Warning Light (four−wheel drive models)

This light warns that the automatic transmission fluid temperature is too high.

If this light comes on while you are driving, slow down and pull off the road. Stop the vehicle at a safe place and put the selector lever in “P”. With the engine idling, wait until the light goes off. If the light goes off, you may start the vehicle again. If the light does not go off, call a Toyota dealer or qualified repair shop for assistance.

NOTICE
Continued driving with the warning light on may damage the automatic transmission.

(n) Low Tire Pressure Warning Light

This light warns that the tire pressure of one or more of your tires (including the spare tire) is low. The light comes on when the ignition key is turned to the “ON” position. It goes off after a few seconds. This indicates that the tire pressure warning system is functioning properly.

If the warning light comes on, stop your vehicle in a safe place as soon as possible and check that the inflation pressure of all tires (including the spare tire) is as specified on the tire and loading information label. (See “Checking tire inflation pressure” on page 381 in Section 7−2.) The light should go off a few minutes after the tire pressure is adjusted.

If the warning light blinks, the tire pressure warning system may be malfunctioning. Contact your Toyota dealer.

For details, see “Tire pressure warning system” on page 188 in Section 1−7.

(o) Low Windshield Washer Fluid Level Warning Light (for vehicles sold in Canada)

The light warns that the windshield washer fluid level is too low. Add washer fluid at your earliest opportunity. (For instructions, see “Adding washer fluid” on page 393 in Section 7–3.)

(p) Key Reminder Buzzer

This buzzer acts as a reminder to remove the key when you open the driver’s door with the ignition key in the “ACC” or “LOCK” position.

CHECKING SERVICE REMINDER INDICATORS (except the low fuel level warning light and low windshield washer fluid level warning light)

1. Apply the parking brake.
2. Open one of the side doors or back door.
   The open door warning light should come on.
3. Close the door.
   The open door warning light should go off.
4. Turn the ignition key to “ON”, but do not start the engine.
   All the service reminder indicators except the open door warning light should come on.

   The following service reminder indicators go off after a few seconds:

- Engine oil replacement reminder light
- “ABS” warning light
- “VSC TRAC” warning light
- Low tire pressure warning light
- “RSCA OFF” indicator light
- “AUTO LSD” indicator light (two–wheel drive models)
- “VSC OFF” indicator light (four–wheel drive models)
- Slip indicator light
- Height control indicator lights
- Downhill assist control system indicator light (four–wheel drive models)
- Height control “OFF” indicator light

The SRS warning light goes off after about 6 seconds.

There may be the case that the “ABS” warning light (brake assist system warning light), “VSC TRAC” warning light and “AUTO LSD” (two–wheel drive models), “VSC OFF” (four–wheel drive models) or slip indicator light stay on for about 60 seconds after the ignition key is turned to the “ON” position. It is normal if they go out after a while.

If any service reminder indicator or warning buzzer does not function as described above, have it checked by your Toyota dealer as soon as possible.

SECTION 1–7

OPERATION OF INSTRUMENTS AND CONTROLS

Ignition switch, Transmission and Parking brake

Ignition switch 156
Automatic transmission 157
Four–wheel drive system 162
Traction control system 168
Active traction control system 170
”AUTO LSD” system 172
Vehicle stability control system 175
Downhill assist control system 177
Hill–start assist control system 180
Rear height control air suspension 182
Tire pressure warning system 188
Parking brake 192
Cruise control 193

Ignition switch

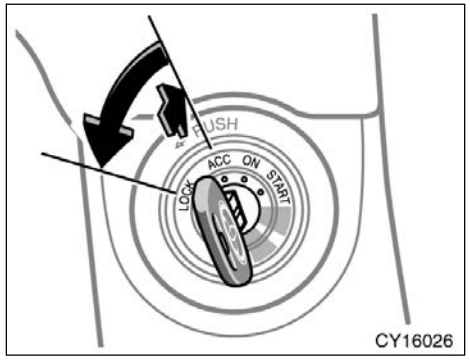

“START”—Starter motor on. The key will return to the “ON” position when released.

For starting tips, see page 309 in Section 3.

“ON”—Engine on and all accessories on.

This is the normal driving position.

“ACC”—Accessories such as the radio operate, but the engine is off.

If you leave the key in the “ACC” or “LOCK” position and open the driver’s door, a buzzer will remind you to remove the key.

“LOCK”—Engine is off and the steering wheel is locked. The key can be removed only at this position.

You must push in the key to turn it from “ACC” to the “LOCK” position. The selector lever must be in the “P” position before pushing the key.

Once you remove the key, the engine immobilizer system is automatically set. (See “Engine immobilizer system” on page 14 in Section 1–2.)

When starting the engine, the key may seem stuck at the “LOCK” position. To free it, first be sure the key is pushed all the way in, and then rock the steering wheel slightly while turning the key gently.

Approximately five hours after the engine is turned off, you may hear sound coming from underneath the luggage compartment for several minutes. This is normal operation and does not indicate a malfunction. (See “Leak detection pump” on page x.)

It is not a malfunction if the needles on all meters and gauges move slightly when the key is turned to the “ACC”, “ON” or “START” position.

NOTICE

Do not leave the key in the “ON” position if the engine is not running. The battery will discharge and the ignition could be damaged.

Automatic transmission

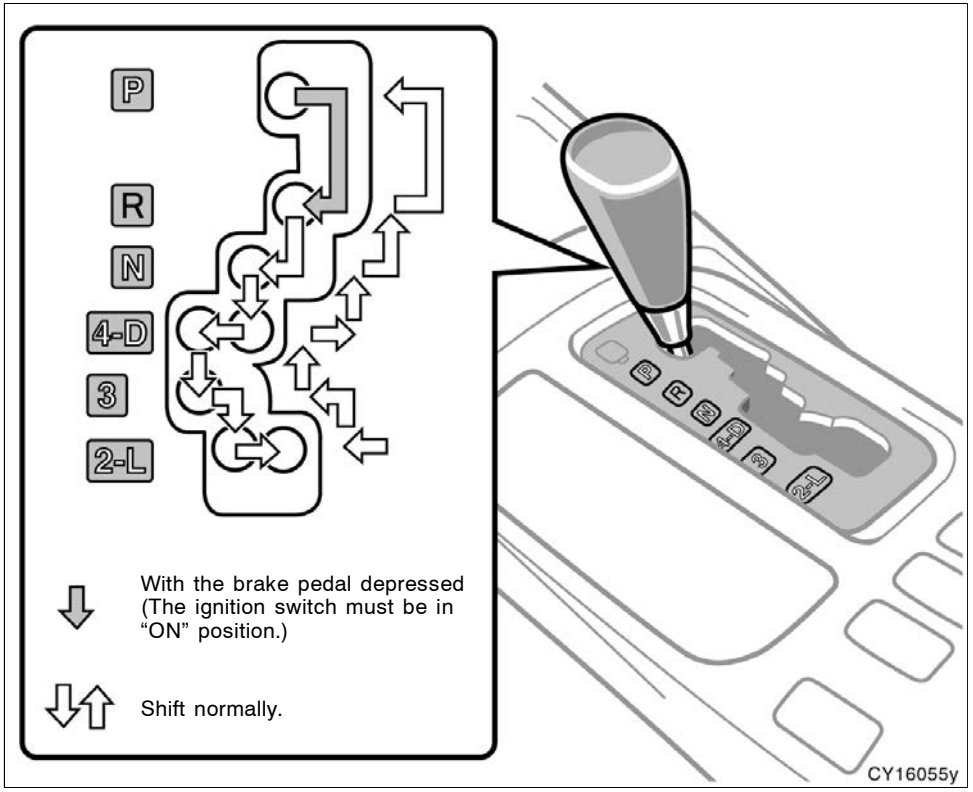

Your automatic transmission has a shift lock system to minimize the possibility of incorrect operation. This means you can only shift out of “P” position when the brake pedal is depressed (with the ignition switch in “ON” position).

(a) Selector lever

The shift position is also displayed on the instrument cluster.

P: Parking, engine starting and key removal

R: Reverse

N: Neutral

D: Normal driving (shifting into overdrive possible)

4: Engine braking (shifting into overdrive not possible)

3, 2: Stronger engine braking

L: Maximum engine braking

(b) Normal driving

1. Start the engine as instructed in “How to start the engine” on page 310 in Section 3. The transmission must be in “P” or “N”.

Vehicles with four–wheel drive control—

When the four–wheel drive control switch knob is in “L4” (low–speed position, center differential locked), the driving pattern selector setting has no effect on gear shift timing. (See “Four–wheel drive system (full–time four–wheel drive models)” on page 162 in this Section for information of the four–wheel drive control.)

Vehicles with multi–mode control—

When the multi–mode control switch knob is in “L4” (low–speed position, four–wheel drive, center differential locked), the driving pattern selector setting has no effect on gear shift timing. (See “Four–wheel drive system (multi–mode four–wheel drive models)” on page 165 in this Section for information of the multi–mode control.)

2. With your foot holding down the brake pedal, shift the selector lever to “D”.

When the lever is in the “D” position, the automatic transmission system will select the most suitable gear for running conditions such as normal cruising, hill climbing, hard towing, etc.

Vehicles with four–wheel drive control—

Always use the “D” position for better fuel economy and quieter driving. If the engine coolant temperature is low or when the four–wheel drive control switch knob is in “L4” (low–speed position, center differential locked), the transmission will not shift into the overdrive gear even in the “D” position. (See “Four–wheel drive system (full–time four–wheel drive models)” on page 162 in this Section for information of the four–wheel drive control.)

Vehicles with multi–mode control—

Always use the “D” position for better fuel economy and quieter driving. If the engine coolant temperature is low or when the multi–mode control switch knob is in “L4” (low–speed position, four–wheel drive, center differential locked), the transmission will not shift into the overdrive gear even in the “D” position. (See “Four–wheel drive system (multi–mode four–wheel drive models)” on page 165 in this Section for information of the multi–mode control.)

⚠ CAUTION

Never put your foot on the accelerator pedal while shifting.

3. Release the parking brake and brake pedal. Depress the accelerator pedal slowly for smooth starting.

If the automatic locking operation linked with the shift position is set, all the side doors and back door are automatically locked when the shift lever is moved out of the “P” position with the engine running and all the side doors and back door are closed. For details, see “—Automatic door locking and unlocking functions” on page 25 in Section 1–2.

(c) Using engine braking

To use engine braking, you can downshift the transmission as follows:

- Shift into the "4" position. The transmission will downshift to fourth gear and engine braking will be enabled.
- Shift into the "3" position. The transmission will downshift to third gear when the vehicle speed drops down to or lower than the following speed, and stronger engine braking will be enabled.

  Two–wheel drive models

  1GR–FE engine

  133 km/h (83 mph)

  2UZ–FE engine

  139 km/h (86 mph)

  Four–wheel drive models

  1GR–FE engine

  Multi–mode control switch knob at "H2" and "H4"

  133 km/h (83 mph)

  Multi–mode control switch knob at "L4"

  51 km/h (31 mph)

  2UZ–FE engine

  Four–wheel drive control switch knob at "H4"

  139 km/h (86 mph)

  Four–wheel drive control switch knob at "L4"

  54 km/h (34 mph)

- Shift into the "2" position. The transmission will downshift to second gear when the vehicle speed drops down to or lower than the following speed, and stronger engine braking will be enabled.

  Two–wheel drive models

  1GR–FE engine

  88 km/h (54 mph)

  2UZ–FE engine

  92 km/h (57 mph)

  Four–wheel drive models

  1GR–FE engine

  Multi–mode control switch knob at "H2" and "H4"

  88 km/h (54 mph)

  Multi–mode control switch knob at "L4"

  34 km/h (21 mph)

  2UZ–FE engine

  Four–wheel drive control switch knob at "H4"

  92 km/h (57 mph)

  Four–wheel drive control switch knob at "L4"

  35 km/h (22 mph)

- Shift into the "L" position. The transmission will downshift to first gear when the vehicle speed drops down to or lower than the following speed, and maximum engine braking will be enabled.

  Two–wheel drive models

  1GR–FE engine

  42 km/h (26 mph)

  2UZ–FE engine

  40 km/h (25 mph)

  Four–wheel drive models

  1GR–FE engine

  Multi–mode control switch knob at "H2" and "H4"

  42 km/h (26 mph)

  Multi–mode control switch knob at "L4"

  16 km/h (9 mph)

2UZ–FE engine

Four–wheel drive control switch knob at “H4”
40 km/h (25 mph)

Four–wheel drive control switch knob at “L4”
15 km/h (9 mph)

When the cruise control is being used, even if you downshift from “D” to “4”, engine braking will not be enabled because the cruise control is not cancelled.

For ways to decrease the vehicle speed, see “Cruise control” on page 193 in this Section.

⚠ CAUTION

Be careful when downshifting on a slippery surface. Abrupt shifting could cause the vehicle to skid or spin.

(d) Using “3”, “2” and “L” positions

The “3”, “2” and “L” positions are used for strong engine braking as described previously.

With the selector lever in ”3”, “2” or “L”, you can start the vehicle in motion as with the lever in “D”.

With the selector lever in “3” or “2”, the vehicle will start in first gear and automatically shift to third gear or second gear.

With the selector lever in “L”, the transmission is engaged in first gear.

NOTICE

◆***Be careful not to over–rev the engine. Watch the tachometer to keep engine rpm from going into the red zone. The approximate maximum allowable speed for each position is given below for your reference:***

Two–wheel drive models

1GR–FE engine
“3” ..... 146 km/h (90 mph)
“2” ..... 100 km/h (62 mph)
“L” ..... 58 km/h (36 mph)

2UZ–FE engine
“3” ..... 146 km/h (90 mph)
“2” ..... 100 km/h (62 mph)
“L” ..... 58 km/h (36 mph)

Four–wheel drive models

1GR–FE engine

Multi–mode drive control switch knob at “H2” or “H4”
“3” ..... 146 km/h (90 mph)
“2” ..... 100 km/h (62 mph)
“L” ..... 58 km/h (36 mph)

Multi–mode drive control switch knob at “L4”
“3” ..... 57 km/h (35 mph)
“2” ..... 39 km/h (24 mph)
“L” ..... 22 km/h (14 mph)

2UZ–FE engine

Four–wheel drive control switch knob at “H4”
“3” ..... 146 km/h (90 mph)
“2” ..... 100 km/h (62 mph)
“L” ..... 58 km/h (36 mph)

Four–wheel drive control switch knob at “L4”
“3” ..... 57 km/h (35 mph)
“2” ..... 39 km/h (24 mph)
“L” ..... 26 km/h (16 mph)

◆***Do not continue hill climbing or hard towing for a long time in the “3”, “2” or “L” position. This may cause severe automatic transmission damage from overheating. To prevent such damage, “4” position should be used in hill climbing or hard towing.***

(e) Backing up

1. Bring the vehicle to a complete stop.
2. With the brake pedal held down with your foot, shift the selector lever to the “R” position.

NOTICE

Never shift into reverse while the vehicle is moving.

Vehicles with rear view monitor system—

When the selector lever is shifted into “R” position with the ignition switch in the “ON” position, rear view monitor system will activate. For instructions, see “Rear view monitor system” on page 254 in Section 1–10.

(f) Parking

1. Bring the vehicle to a complete stop.
2. With the brake pedal pressed down, fully depress the parking brake pedal to apply the parking brake securely.
3. With the brake pedal pressed down, shift the selector lever to the “P” position.

⚠ CAUTION

Never attempt to move the selector lever into “P” position under any circumstances while the vehicle is moving. Serious mechanical damage and loss of vehicle control may result.

If the automatic unlocking operation linked with the shift position is set, all the side doors and back door are automatically unlocked when the selector lever is moved to the “P” position with the ignition switch is in the “ON” position. For details, see “—Automatic door locking and unlocking functions” on page 25 in Section 1–2.

(g) Good driving practice

- If the transmission repeatedly shifts up and down between fourth gear and overdrive when climbing a gentle slope, shift the selector lever to the “4” position. Be sure to shift the selector lever to the “D” position immediately afterward.
- When towing a trailer, in order to maintain engine braking efficiency, do not use “D” position.

CAUTION

Always keep your foot on the brake pedal while stopped with the engine running. This prevents the vehicle from creeping.

NOTICE

Always use the brake pedal or the parking brake to hold the vehicle on an upgrade. Do not attempt to hold the vehicle using the accelerator pedal, as this can cause the transmission to overheat.

(h) If you cannot shift the selector lever out of “P” position

If you cannot shift the selector lever from the “P” position even though the brake pedal is depressed, use the shift lock override button. For instructions, see “If you cannot shift automatic transmission selector lever” on page 350 in Section 4.

Four−wheel drive system (full−time four−wheel drive models)—
(a) Four−wheel drive control

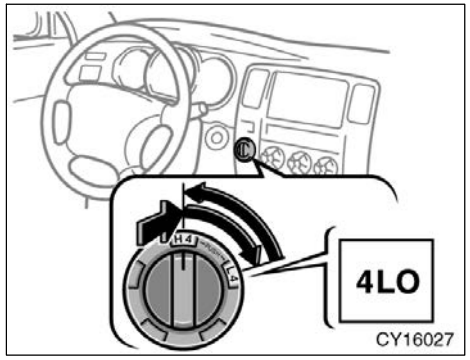

Four−wheel drive control switch knob

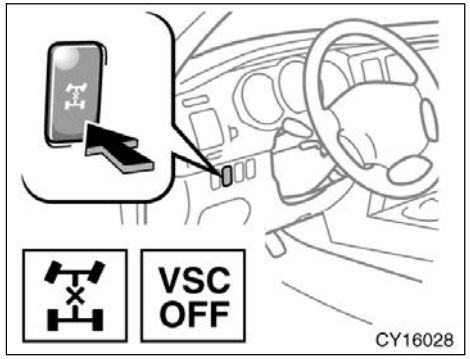

Center differential lock switch

Use the four–wheel drive control switch knob and center differential lock switch to select the transfer and center differential modes.

The "H4" and "L4" positions of the four–wheel drive control switch knob provide either lock or unlock mode of the center differential depending on the center differential lock switch position.

Use the center differential lock system if your wheels get stuck in a ditch, or when you are driving on a slippery or bumpy surface. When the center differential is locked, the vehicle stability control system is automatically turned off and the center differential lock and "VSC OFF" indicator lights come on because the function that controls engine performance interferes with the process of freeing your wheels.

NOTICE

As soon as the center differential lock switch is turned on, the "VSC OFF" indicator light comes on. After the wheels are out of the ditch or off the slippery or bumpy surface, turn the center differential lock switch off. Make sure that the center differential lock indicator light and vehicle stability control system off indicator light turn off.

"H4" (high speed position, center differential unlocked): Four–wheel drive control switch knob at "H4", center differential lock switch left out

Use this for normal driving on all types of roads, from dry hard–surfaced roads to wet, icy or snow–covered roads. This position gives greater economy, quietest ride, least wear and better vehicle control.

"H4" (high speed position, center differential locked): Four–wheel drive control switch knob at "H4", center differential lock switch pushed in

Use this for greater traction when you experience a loss of power, such as wheel slipping, in the center differential unlock mode.

"L4" (low speed position, center differential unlocked): Four–wheel drive control switch knob at "L4", center differential lock switch left out

The "4LO" (low speed four–wheel drive) indicator light comes on when the "L4" mode is selected.

Use this for maximum power and traction. Use this for climbing or descending steep hills, off–road driving, and hard pulling in sand or mud.

In this mode, the braking feeling that occurs when the wheels are negotiating a sharp corner is further reduced than in the "L4" (low position, center differential locked) mode.

"L4" (low speed position, center differential locked): Four–wheel drive control switch knob at "L4", center differential lock switch pushed in

The "4LO" (low speed four–wheel drive) indicator light comes on when the "L4" mode is selected.

Use this for maximum power and traction. Use this for hard pulling in situations the vehicle cannot negotiate even in the “L4” (low speed position, center differential unlocked) mode. Also, using this mode when driving down steep off–road inclines will help contribute to increased vehicle stability.

The indicator light tells when the differential lock is engaged. Note that the differential is not still locked as long as the indicator light remains off.

When the operation is not completed, the indicator blinks. If the indicator light does not go off when you push out the center differential lock switch, drive straight ahead while accelerating or decelerating, or drive in reverse.

If the center differential lock system operation is not completed within 5 seconds while the cruise control system is set, cancel the cruise control system. To cancel the cruise control system, see “Cruise control” on page 193 in Section 1–7.

If the indicator blinks even if doing so, contact your Toyota dealer as soon as possible. There may be a trouble in the center differential lock system.

See “(b) Shifting procedure” for further instructions.

(b) Shifting procedure

SHIFTING BETWEEN “H4” (UNLOCKED) AND “H4” (LOCKED)

To shift between unlock and lock modes in “H4”, push the center differential lock switch.

SHIFTING BETWEEN “L4” (UNLOCKED) AND “L4” (LOCKED)

To shift between unlock and lock modes in “L4”, push the center differential lock switch.

SHIFTING BETWEEN “H4” AND “L4”

To shift from “H4” to “L4”, bring the vehicle to a complete stop with the brake pedal held down with your foot, shift the automatic transmission selector lever into “N” and push and turn the four–wheel drive control switch knob fully clockwise.

To shift from “L4” to “H4”, bring the vehicle to a complete stop with the brake pedal held down with your foot, shift the automatic transmission selector lever into “N” and turn the four–wheel drive control switch knob fully counterclockwise.

If the “4LO” (low speed four–wheel drive) indicator light continues to blink when you operate the four–wheel drive control switch knob to the “H4” or “L4” position, drive forward or backward in a short distance, then stop the vehicle completely, shift the automatic transmission selector lever securely into “N” and operate the switch knob again.

If the indicator continues to blink even if doing so, contact your Toyota dealer as soon as possible. There may be a trouble in the four–wheel drive system.

⚠ CAUTION

Never operate the four–wheel drive control switch knob if the wheels are slipping. Stop the slipping or spinning before operating.

Four−wheel drive system (multi−mode four−wheel drive models)—
(a) Multi−mode control

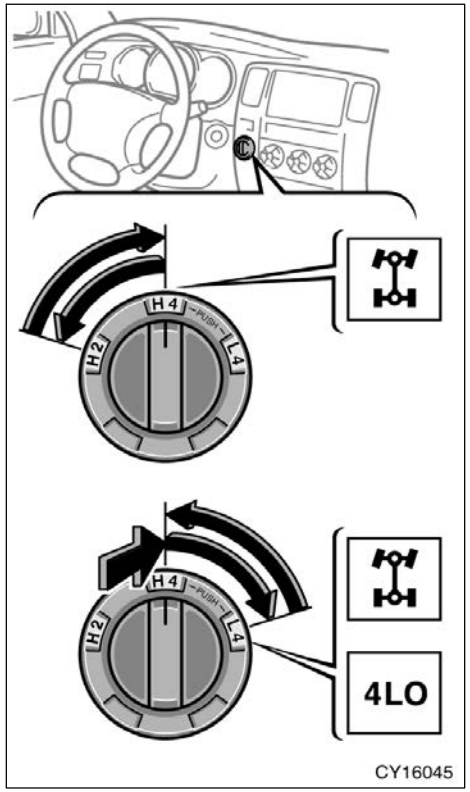

Multi−mode control switch knob

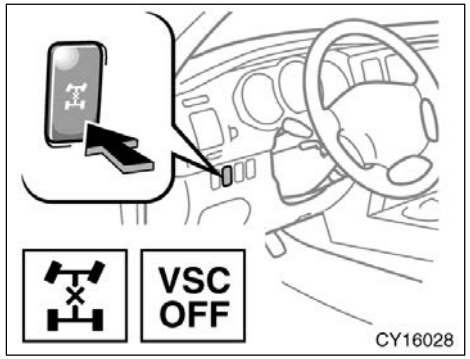

Center differential lock switch

Use the multi−mode control switch knob and center differential lock switch to select the transfer and center differential modes.

The “H4” and “L4” positions of the multi−mode control switch knob provide either lock or unlock mode of the center differential depending on the center differential lock switch position.

Use the center differential lock system if your wheels get stuck in a ditch, or when you are driving on a slippery or bumpy surface. When the center differential is locked, the vehicle stability control system is automatically turned off and the center differential lock and “VSC OFF” indicator lights come on because the function that controls engine performance interferes with the process of freeing your wheels.

NOTICE

As soon as the center differential lock switch is turned on, the “VSC OFF” indicator light comes on. After the wheels are out of the ditch or off the slippery or bumpy surface, turn the center differential lock switch off. Make sure that the center differential lock indicator light and vehicle stability control system off indicator light turn off.

“H2” (high speed position, two−wheel drive, center differential unlocked): Multi−mode control switch knob at “H2”, center differential lock switch left out

Use this for normal driving on dry hard−surfaced roads. This position gives greater economy, quietest ride, least wear and better vehicle control.

“H4” (high speed position, four−wheel drive, center differential unlocked): Multi−mode control switch knob at “H4”, center differential lock switch left out

The four−wheel drive indicator light comes on when the “H4” mode is selected.

Use this for normal driving on all types of roads, from dry hard−surfaced roads to wet, icy or snow−covered roads. This position provides greater traction than two−wheel drive.

“H4” (high speed position, four−wheel drive, center differential locked): Multi−mode control switch knob at “H4”, center differential lock switch pushed in

The four−wheel drive indicator light comes on when the “H4” mode is selected.

Use this for greater traction when you experience a loss of power, such as wheel slipping, in the center differential unlock mode.

“L4” (low speed position, four−wheel drive, center differential unlocked): Multi−mode control switch knob at “L4”, center differential lock switch left out

The four−wheel drive and “4LO” (low speed four−wheel drive) indicator lights come on when the “L4” mode is selected.

Use this for maximum power and traction. Use this for climbing or descending steep hills, off−road driving, and hard pulling in sand or mud.

In this mode, the braking feeling that occurs when the wheels are negotiating a sharp corner is further reduced than in the “L4” (low speed position, four−wheel drive, center differential locked) mode.

“L4” (low speed position, four−wheel drive, center differential locked): Multi−mode control switch knob at “L4”, center differential lock switch pushed in

The four−wheel drive and “4LO” (low speed four−wheel drive) indicator lights come on when the “L4” mode is selected.

Use this for maximum power and traction. Use this for hard pulling in situations the vehicle cannot negotiate even in the “L4” (low speed position, four−wheel drive, center differential unlocked) mode. Also, using this mode when driving down steep off−road inclines will help contribute to increased vehicle stability.

The indicator light tells when the differential lock is engaged. Note that the differential is not still locked as long as the indicator light remains off.

When the operation is not completed, the indicator blinks. If the indicator light does not go off when you push out the center differential lock switch, drive straight ahead while accelerating or decelerating, or drive in reverse.

If the center differential lock system operation is not completed within 5 seconds while the cruise control system is set, cancel the cruise control system. To cancel the cruise control system, see “Cruise control” on page 193 in Section 1−7.

If the indicator blinks even if doing so, contact your Toyota dealer as soon as possible. There may be a trouble in the center differential lock system.

See “(c) Shifting procedure” for further instructions.

(b) A.D.D. (automatic disconnecting differential)

The A.D.D. can be engaged or disengaged by the shifting operations described in “(c) Shifting procedure”.

You should drive in four–wheel drive for at least 16 km (10 miles) each month. This will assure that the front drive components are lubricated.

(c) Shifting procedure

SHIFTING BETWEEN “H2” AND “H4” (UNLOCKED)

To shift from “H2” to “H4” (unlocked), reduce the vehicle speed to less than 100 km/h (62 mph) and turn the multi–mode control switch knob fully clockwise.

If the four–wheel drive indicator light continues to blink when you operate the multi–mode control switch knob from the “H2” to the “H4” position, this reminds you that the transfer mode is not securely in “H4” mode. Drive straight ahead while accelerating or decelerating.

If the four–wheel drive indicator light continues to blink and the buzzer sounds when you operate the multi–mode control switch knob from the “H2” to the “H4” position, this reminds you that the transfer mode is not in “H4” mode. Stop the vehicle or reduce the vehicle speed to less than 100 km/h (62 mph). Operate the switch knob again.

To shift from “H4” (unlocked) to “H2”, turn the multi–mode control switch knob fully counterclockwise.

This can be done at any speed.

If the four–wheel drive indicator light continues to blink when you operate the multi–mode control switch knob from the “H4” to the “H2” position, this reminds you that the transfer mode is not securely in “H2” mode. Drive straight ahead while accelerating or decelerating, or drive forward or backward in a short distance.

If the indicator light continues to blink even if doing so, contact your Toyota dealer as soon as possible. There may be a trouble in the four–wheel drive system.

⚠ CAUTION

Never operate the multi–mode control switch knob if the wheels are slipping. Stop the slipping or spinning before operating.

SHIFTING BETWEEN “H4” (UNLOCKED) AND “H4” (LOCKED)

To shift between unlock and lock modes in “H4”, push the center differential lock switch.

SHIFTING BETWEEN “L4” (UNLOCKED) AND “L4” (LOCKED)

To shift between unlock and lock modes in “L4”, push the center differential lock switch.

SHIFTING BETWEEN “H4” AND “L4”

To shift from “H4” to “L4”, bring the vehicle to a complete stop with the brake pedal held down with your foot, shift the automatic transmission selector lever into “N” and push and turn the multi–mode control switch knob fully clockwise.

To shift from “L4” to “H4”, bring the vehicle to a complete stop with the brake pedal held down with your foot, shift the automatic transmission selector lever into “N” and turn the multi–mode control switch knob counterclockwise.

If the “4LO” (low speed four–wheel drive) indicator light continues to blink when you operate the multi–mode control switch knob to the “H4” or “L4” position, drive forward or backward in a short distance, then stop the vehicle completely, shift the automatic transmission selector lever securely into “N” and operate the switch knob again.

If the indicator continues to blink even if doing so, contact your Toyota dealer as soon as possible. There may be a trouble in the four–wheel drive system.

⚠ CAUTION

Never operate the multi–mode control switch knob if the wheels are slipping. Stop the slipping or spinning before operating.

Traction control system (two–wheel drive models)

The traction control system automatically helps prevent the spinning of rear wheels when the vehicle is started or accelerated on slippery road surfaces.

When the ignition key is turned to “ON”, the system automatically turns on.

⚠ CAUTION

Under certain slippery road conditions, full traction of the vehicle and power to the rear wheels cannot be maintained, even though the traction control system is in operation. Do not drive the vehicle under any speed or maneuvering conditions which may cause the vehicle to lose traction control. In situations where the road surface is covered with ice or snow, your vehicle should be fitted with snow tires or tire chains. Always drive at an appropriate and cautious speed for the present road conditions.

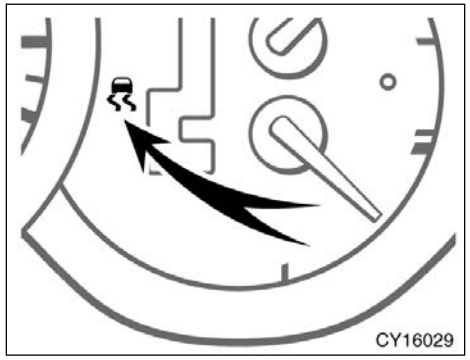

NORMAL DRIVING MODE

Leave the system on during ordinary driving so that it can operate when needed.

You may hear a sound in the engine compartment for a few seconds when the engine is started or just after the vehicle begins to move. This means that the traction control system is in the self–check mode, but does not indicate a malfunction.

When the traction control system is operating, the following conditions occur:

- The system controls the spinning of the rear wheels. At this time, the slip indicator light blinks.
- You may feel vibration or noise in your vehicle, caused by operation of the brakes. This indicates the system is functioning properly.

The slip indicator light comes on for a few seconds when the ignition key is turned to “ON”. If the indicator light does not come on when the ignition is turned on, contact your Toyota dealer.

The brake actuator temperature increases during continuous operation of the traction control system, the “AUTO LSD” system, the vehicle stability control system and the hill–start assist control system such as on slippery roads. If the brake actuator temperature becomes too high while any of the systems is operating, a buzzer will start to sound intermittently to indicate that the traction control system can no longer operate. In this case, immediately stop your vehicle at a safe place.

If the system continues to operate, the buzzer sound changes from intermittent to continuous. (The continuous buzzer sounds for about 3 seconds.)

At the time the slip indicator light will come on and the traction control system temporarily stops operating in order to protect the brake actuator. (Although the traction control system does not operate, there is no problem to continue your driving.) The system will be automatically restored after a short time and the slip indicator light goes out.

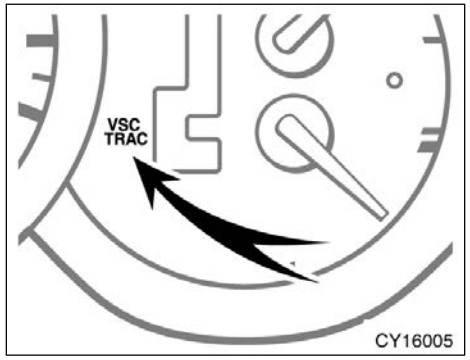

“VSC TRAC” warning light

This light warns that there is a problem somewhere in the following.

- Traction control system
- “AUTO LSD” system
- Vehicle stability control system
- Hill–start assist control system

When the system is normal and the ignition key is turned to “ON”, the “VSC TRAC” warning light will come on and will go off after a few seconds.

It is not a malfunction that the warning light may stay on for 60 seconds after the ignition key is turned to “ON”.

Depressing the brake pedal repeatedly may turn on the light. It is normal if it goes out after a few seconds.

If the “VSC TRAC” warning light and slip indicator light come on while driving, the traction control system does not work. However, as normal braking operates when being applied, there is no problem to continue your driving.

In the following cases, contact your Toyota dealer:

- The warning light does not come on after the ignition key is turned to “ON”.
- The warning light remains on after the ignition key is turned to “ON”.
- The warning light comes on while driving.

Active traction control system

(four–wheel drive models)

The active traction control system automatically helps prevent the spinning of 4 wheels when the vehicle is started or accelerated on slippery road surfaces.

When the ignition key is turned to “ON”, the system automatically turns on.

⚠ CAUTION

Under certain slippery road conditions, full traction of the vehicle and power to the 4 wheels cannot be maintained, even though the traction control system is in operation. Do not drive the vehicle under any speed or maneuvering conditions which may cause the vehicle to lose traction control. In situations where the road surface is covered with ice or snow, your vehicle should be fitted with snow tires or tire chains. Always drive at an appropriate and cautious speed for the present road conditions.

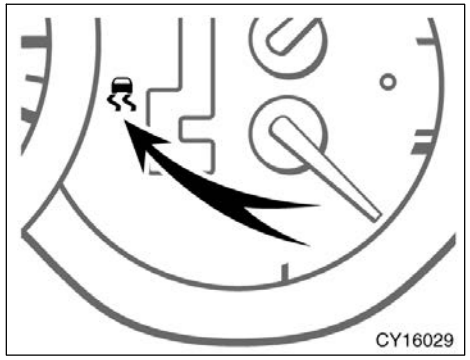

Leave the system on during the ordinary driving so that it can operate when needed.

You may hear a sound in the engine compartment for a few seconds when the engine is started or just after the vehicle begins to move. This means that the active traction control system is in the self–check mode, but does not indicate a malfunction.

When the active traction control system is operating, the following conditions occur:

- The system controls the spinning of the 4 wheels. At this time, the slip indicator light blinks.
- You may feel vibration or noise in your vehicle, caused by operation of the brakes. This indicates the system is functioning properly.

The slip indicator light comes on for a few seconds when the ignition key is turned to “ON”. If the indicator light does not come on when the ignition is turned on, contact your Toyota dealer.

The brake actuator temperature increases during continuous operation of the active traction control system, the vehicle stability control system, the downhill assist control system and the hill–start assist control system such as on slippery roads. If the brake actuator temperature becomes too high while any of the systems is operating, a buzzer will start to sound intermittently to indicate that the active traction control system can no longer operate. In this case, immediately stop your vehicle at a safe place.

If the system continues to operate, the buzzer sound changes from intermittent to continuous. (The continuous buzzer sounds for about 3 seconds.)

At the time, the slip indicator light will come on and the active traction control system temporarily stops operating in order to protect the brake actuator. (Although the active traction control system does not operate, there is no problem to continue your driving.) The system will be automatically restored after a short time and the slip indicator light goes out.

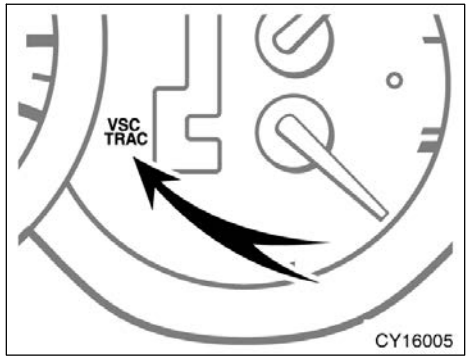

“VSC TRAC” warning light

This light warns that there is a problem somewhere in the following.

- Active traction control system
- Vehicle stability control system
- Downhill assist control system
- Hill–start assist control system

When the system is normal and the ignition key is turned to “ON”, the warning light will come on and will go off after a few seconds.

It is not a malfunction that the “VSC TRAC” warning light may stay on for 60 seconds after the ignition key is turned to “ON”.

Depressing the brake pedal repeatedly may turn on the light. It is normal if it goes out after a few seconds.

If the “VSC TRAC” warning light and slip indicator light come on while driving, the active traction control system does not work. However, as normal braking operates when being applied, there is no problem to continue your driving.

In the following cases, contact your Toyota dealer:

- The warning light does not come on after the ignition key is turned to “ON”.
- The warning light remains on after the ignition key is turned to “ON”.
- The warning light comes on while driving.

“AUTO LSD” system (two–wheel drive models)

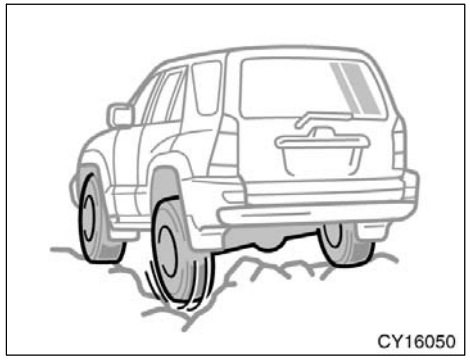

The “AUTO LSD” system aids traction by using the traction control system to control engine performance and braking when one of the rear wheels begins to spin.

This system is used only when wheel spinning occurs in a ditch or on a rough surface.

This system is effective in case one of the rear wheels is spinning.

NOTICE

Do not use the “AUTO LSD” system in conditions other than the above. A much greater steering effort and more careful cornering control will be required.

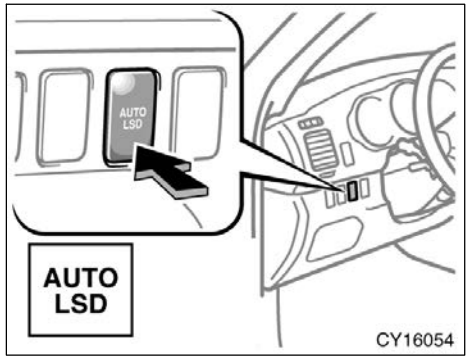

To activate the system, push the “AUTO LSD” switch with the vehicle stopped.

The “AUTO LSD” is activated when driving at a speed under 100 km/h (62 mph). At this time, the “AUTO LSD” indicator light will come on.

To cancel the system, push the “AUTO LSD” switch once again.

If the engine is turned off while the “AUTO LSD” indicator light is on and then restarted, the indicator light will turn off automatically.

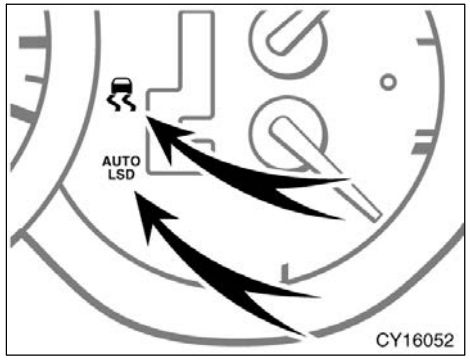

Make sure the “AUTO LSD” indicator light comes on under the above condition when you use the “AUTO LSD” system.

The slip indicator light blinks when the system is controlling the spinning of the rear wheels.

The “AUTO LSD” and slip indicator lights come on for a few seconds when the ignition key is turned to “ON”. If the indicator lights does not come on when the ignition key is turned to “ON”, contact your Toyota dealer.

The brake actuator temperature increases during continuous operation of the “AUTO LSD” system, the traction control system and the vehicle stability control system such as on slippery roads. If the brake actuator temperature becomes too high while any of the systems is operating, a buzzer will start to sound intermittently to indicate that the “AUTO LSD” system can no longer operate. In this case, immediately stop your vehicle at a safe place.

If the system continues to operate, the buzzer sound changes from intermittent to continuous. (The continuous buzzer sounds for about 3 seconds.)

At the time the slip indicator light will come on and the “AUTO LSD” system temporarily stops operating in order to protect the brake actuator. (Although the “AUTO LSD” system does not operate, it is no problem to continue driving.) The system will be automatically restored after a short time and the slip indicator light goes off.

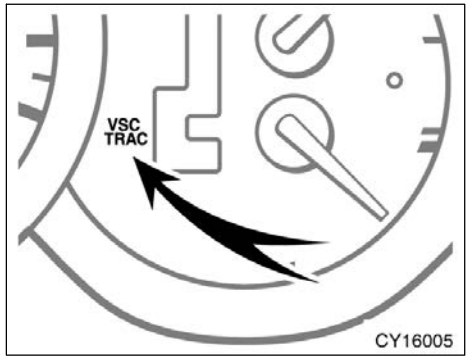

“VSC TRAC” warning light

This light warns that there is a problem somewhere in the following.

- “AUTO LSD” system
- Traction control system
- Vehicle stability control system

When the system is normal and the ignition key is turned to “ON”, the light will come on and will go off after a few seconds.

It is not a malfunction that the warning light may stay on for 60 seconds after the ignition key is turned to “ON”.

Depressing the brake pedal repeatedly may turn on the light. It is normal if it goes out after a few seconds.

If the “VSC TRAC” warning light and slip indicator light comes on while driving, the “AUTO LSD” system does not work. However, as the brakes operate normally when applied, it is no problem to continue your driving.

In the following cases, contact your Toyota dealer:

- The warning light does not come on after the ignition key is turned to “ON”.
- The warning light remains on after the ignition key is turned to “ON”.
- The warning light comes on while driving.

NOTICE

Do not drive with the “AUTO LSD” switch continuously turned on.

Vehicle stability control system

The vehicle stability control system helps provide integrated control of the systems such as anti–lock brake system, traction control, engine control, etc. This system automatically controls the output of the brakes or engine to help prevent the vehicle from skidding when cornering on a slippery road surface or operating steering wheel abruptly.

This vehicle stability control activates when the vehicle speed is more than 15 km/h (9 mph).

You may hear a sound in the engine compartment for a few seconds when the engine is started or just after the vehicle begins to move. This means that the system is in the self–check mode, but does not indicate a malfunction.

⚠ CAUTION

- **Do not rely excessively on the vehicle stability control system. Even if the vehicle stability control system is operating, you must always drive carefully and attentively to avoid serious injury. Reckless driving will result in an unexpected accident. If the slip indicator light blinks and an alarm sounds, special care should be taken while driving.**
- **Only use tires of specified size. The size, manufacturer, brand and tread pattern for all 4 tires should be the same. If you use the tires other than specified, or different type or size, the vehicle stability control system may not function correctly. When replacing the tires or wheels, contact your Toyota dealer. (See “Checking and replacing tires” on page 384 in Section 7–2.)**

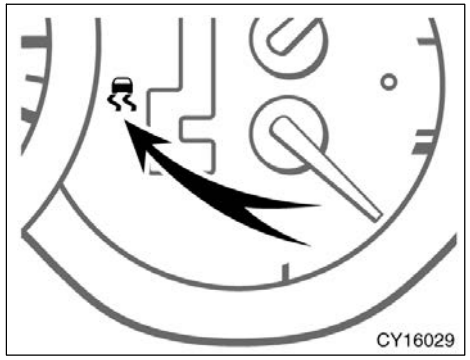

If the vehicle is going to skid during driving, the slip indicator light blinks and an alarm sounds intermittently. Special care should be taken while driving.

If the brake pedal is depressed while the vehicle stability control system is active, the brake pedal will become hard at an earlier position than usual. However, the brakes will respond to the pedal force if depressed further.

The slip indicator light comes on for a few seconds when the ignition key is turned to “ON”. If the indicator light does not come on when the ignition is turned on, contact your Toyota dealer.

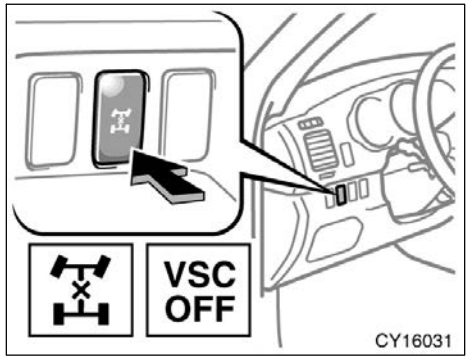

Four−wheel drive models only—

Pushing the center differential lock switch automatically turns the vehicle stability control system off. At this time, the “VSC OFF” indicator comes on with the center differential lock indicator light.

The “VSC OFF” indicator light comes on for a few seconds when the ignition key is turned to “ON”. It will come on again when you push the center differential lock switch to turn off the system.

In the following cases, contact your Toyota dealer:

- The indicator light does not come on when the ignition key is turned to “ON”.
- The indicator light remains on after the ignition key is turned to “ON”.
- The indicator light comes on when the system is on while driving.

NOTICE

Make sure that the center differential lock indicator light goes off before normal driving.

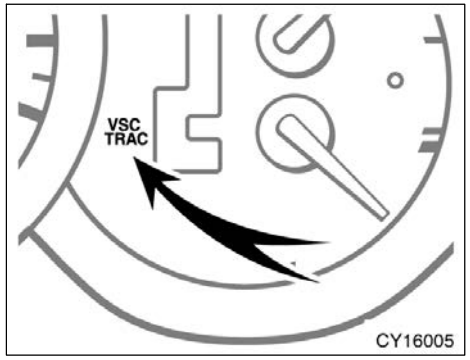

“VSC TRAC” warning light

This light warns that there is a problem somewhere in the following.

- Vehicle stability control system
- Traction control system (two−wheel drive models)
- Active traction control system (four−wheel drive models)
- “AUTO LSD” system (two−wheel drive models)
- Downhill assist control system (four−wheel drive models)
- Hill−start assist control system

The light will come on when the ignition key is turned to “ON”, and will go off after about a few seconds.

The light may come on for 60 seconds after the ignition key is turned to “ON”. It is normal if they go out after a while.

Depressing the brake pedal repeatedly may turn on the light. It is normal if they go out after a few seconds.

If the “VSC TRAC” waning light and slip indicator light come on while driving, the vehicle stability control system does not work. However, as normal braking operates when being applied, there is no problem to continue your driving.

In the following cases, contact your Toyota dealer:

- The warning light does not come on after the ignition key is turned to “ON”.
- The warning light remains on after the ignition key is turned to “ON”.
- The warning light comes on while driving.

Downhill assist control system (four−wheel drive models)

The downhill assist control system is a system that assists the deceleration of the engine brake when you drive down a steep hill. When you are driving down a hill with the four−wheel drive control switch knob (full−time four−wheel drive models) or multi−mode control switch knob (multi−mode four−wheel drive models) in the “L4” position, push the “DAC” switch to limit the vehicle’s acceleration. If the vehicle is traveling at a speed of 25 km/h (15 mph) or less, you can descend at a constant speed.

⚠ CAUTION

Do not rely excessively on the downhill assist control system. It may not be able to maintain a low speed over road surfaces or off−road surfaces on which sliding can easily occur, such as extremely steep slopes or icy or muddy roads.

TO ACTIVATE THE DOWNHILL ASSIST CONTROL SYSTEM

1. **Full−time four−wheel drive models—Turn the four−wheel drive control switch knob to the “L4” position.**

The system will not operate if the four−wheel drive control switch knob is in the “H4” position.

Multi−mode four−wheel drive models—Turn the multi−mode control switch knob to the “L4” position.

The system will not operate if the multi−mode control switch knob is in the “H4” position.

2. **In order to make full use of the engine brake, putting the transmission in “L” or “2” is recommended.**

The system will operate even if the transmission selector lever is in “D”, “4”, “3” or “N”. However, when it is in “L” or “2” the engine brake can also be utilized enabling the system to operate more effectively.

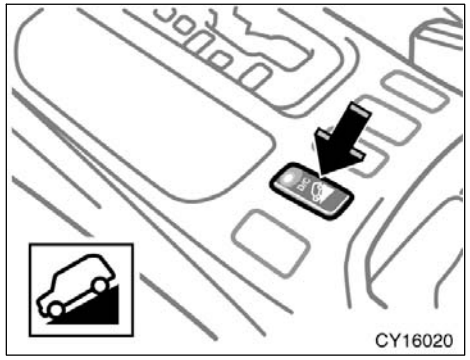

3. Push the “DAC” switch to turn the system on. The downhill assist control system indicator light on the instrument panel will come on.

Full–time four–wheel drive models—If the downhill assist control system indicator light flashes, the selector lever may be in “N” or the four–wheel drive control switch knob may be in the “H4” position.

If the indicator light does not come on when the switch is pushed, contact your Toyota dealer.

Multi–mode four–wheel drive models—If the downhill assist control system indicator light flashes, the selector lever may be in “N” or the multi–mode control switch knob may be in the “H2” or “H4” position.

If the indicator light does not come on when the switch is pushed, contact your Toyota dealer.

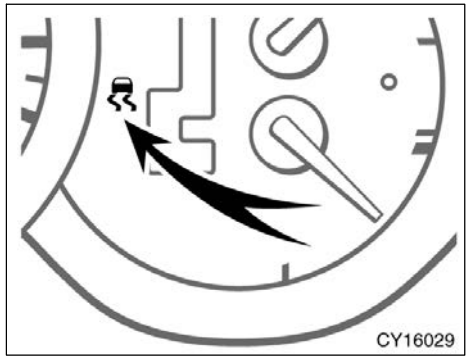

With the vehicle traveling at a speed of 25 km/h (15 mph) or less, release your foot from the accelerator or brake pedal to activate the system. The vehicle will descend the hill at a low speed. While the system is operating, the slip indicator light on the instrument panel will flash and the stop lights and high mounted stoplight will be lit.

If you push the “DAC” switch to turn the system off while it is in operation, the system will stop operating gradually. The downhill assist control system indicator light will flash to alert the driver. To continue driving at a low speed, push the “DAC” switch to turn the system on.

The slip indicator light and downhill assist control system indicator light come on for a few seconds when the ignition key is turned to “ON”. If any of the indicator lights does not come on when the ignition is turned on, contact your Toyota dealer.

The brake actuator temperature increases during continuous operation of the hill–start assist control system, the active traction control system and the vehicle stability control system. If the brake actuator temperature becomes too high while any of the systems is operating, a buzzer will start to sound intermittently to indicate that the downhill assist control system can no longer operate. In this case, stop your vehicle immediately at a safe place.

If the system continues to operate, the buzzer sound changes from intermittent to continuous. (The continuous buzzer sounds for about 3 seconds.)

At this time, the slip indicator light will come on, the downhill assist control system indicator light flash and the downhill assist control system stops operating temporarily in order to protect the brake actuator. (Although the downhill assist control system does not operate, it is no problem to continue your driving.) The system will be automatically restored after a short time and the slip indicator light and the downhill assist control system indicator light go out.

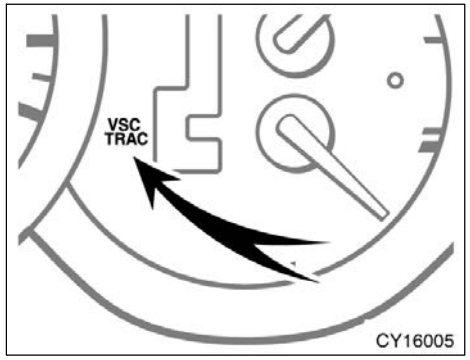

If there is any abnormality in the system, the “VSC TRAC” warning light will come on. When the “DAC” switch is pushed, the downhill assist control system indicator light also flash.

If the “VSC TRAC” warning light comes on, there may be an abnormality in any of the following systems in addition to the downhill assist control system.

- Hill–start assist control system
- Active traction control system
- Vehicle stability control system

“VSC TRAC” warning light

When the system is normal and the ignition key is turned to “ON”, the warning light will come on and will go off after a few seconds.

It is not a malfunction that the warning light may stay on for 60 seconds after the ignition key is turned to the “ON” position.

Depressing the brake pedal repeatedly may turn on the light. It is normal if it goes out after a few seconds.

If the warning light comes on while driving, the system does not work. However, as normal braking operates when being applied, it is no problem to continue your driving.

In the following cases, contact your Toyota dealer:

- The warning light does not come on after the ignition key is turned to “ON”.
- The warning light remains on after the ignition key is turned to “ON”.
- The warning light comes on while driving.

Hill−start assist control system

The hill−start assist control system assists you in starting to move up a steep or slippery hill. When you start to move up the hill slope, the system helps to prevent the vehicle from rolling backward in the interval while you move your foot from the brake pedal to the accelerator pedal.

CAUTION

- **Do not rely excessively on the hill−start assist control system. The vehicle may not be able to start smoothly on road surfaces or off−road surfaces such as extremely steep slopes or icy roads, on which sliding can occur very easily.**
- **Do not use the hill−start assist control system to stop the vehicle. This system is not designed as a function for stopping the vehicle on a uphill slope.**

The hill−start assist control system will operate for 5 seconds maximally when all of the following conditions apply.

- **When the transmission is in any of positions “D”, “4”, “3”, “2” or “L”**
- **When the brake pedal is not depressed**

The system is designed to operate when the vehicle is starting on an uphill slope; therefore, if the transmission is in “P” or “N” it will not operate. It will not operate either if the vehicle starts to move in reverse on a slope with the transmission in the “R”.

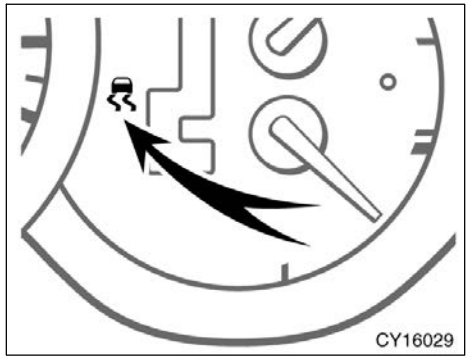

When the hill–start assist control system is operating, the slip indicator light flashes and an alarm sounds intermittently. At the same time, the stop lamps and high mounted stoplight are lit.

The slip indicator light comes on for a few seconds when the ignition key is turned to “ON”. If the indicator light does not come on when the ignition is turned on, contact your Toyota dealer.

Keep in mind the following when driving.

- The hill–start assist control system operates for 5 seconds maximally. If both the brake and accelerator pedals remain undepressed for longer than 5 seconds, the buzzer will sound at more frequent intervals and the system will gradually stop operating.
- The hill–start assist control system is not designed as a function for stopping the vehicle on a uphill slope. When stopping the vehicle, be sure to depress the brake pedal.

The brake actuator temperature increases during continuous operation of the downhill assist control system (four–wheel drive models), the traction control system (two–wheel drive models), the active traction control system (four–wheel drive models), the vehicle stability control system and the “AUTO LSD” system (two–wheel drive models) on such as slippery roads. If the brake actuator temperature becomes too high while any of the systems is operating, a buzzer will start to sound intermittently to indicate that the hill–start assist control system can no longer operate. In this case, stop your vehicle immediately at a safe place.

If the system continues to operate, the buzzer sound changes from intermittent to continuous. (The continuous buzzer sounds for about 3 seconds.)

At this time, the slip indicator light will come on and the hill–start assist control system stops operating temporarily in order to protect the brake actuator. (Although the hill–start assist control system does not operate, it is no problem to continue your driving.) The system will be automatically restored after a short time and the slip indicator light goes out.

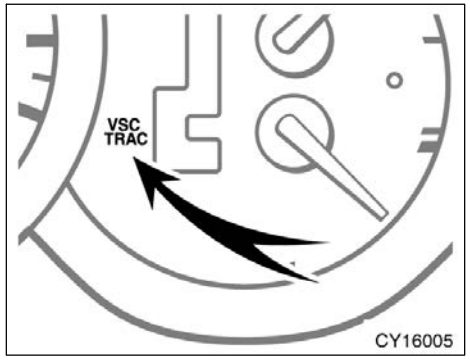

If there is any abnormality in the system, the “VSC TRAC” warning light will come on.

If the system malfunctions, the “VSC TRAC” warning light will come on.

If the “VSC TRAC” warning light comes on, there may be an abnormality in any of the following systems in addition to the hill–start assist control system.

- Downhill assist control system (four–wheel drive models)
- Traction control system (two–wheel drive models)
- Active traction control system (four–wheel drive models)
- Vehicle stability control system
- “AUTO LSD” system (two–wheel drive models)

“VSC TRAC” warning light

When the system is normal and the ignition key is turned to “ON”, the warning light will come on and will go off after a few seconds.

It is not a malfunction that the warning light may stay on for 60 seconds after the ignition key is turned to “ON”.

Depressing the brake pedal repeatedly may turn on the light. It is normal if it goes out after a few seconds.

If the warning light comes on while driving, the system does not work. However, as normal braking operates when being applied, it is no problem to continue your driving.

In the following cases, contact your Toyota dealer:

- The warning light does not come on after the ignition key is turned to “ON”.
- The warning light remains on after the ignition key is turned to “ON”.
- The warning light comes on while driving.

Rear height control air suspension

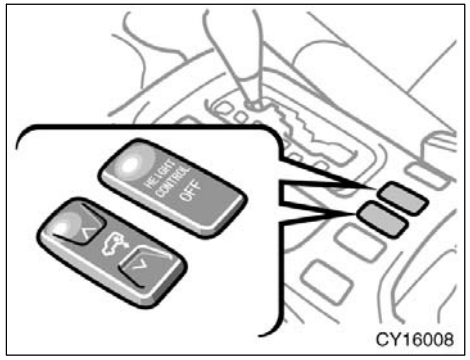

This rear height control air suspension controls the vehicle height depending on the vehicle driving conditions. Select your desired height among the “HI” (high), “N” (normal) and “LO” (low) modes with the height select switch.

(a) Vehicle height modes

“N” (normal) mode—

The vehicle height in this mode is standard. Regardless of the number of occupants or the luggage loading condition, the vehicle height is always automatically adjusted to a fixed height in this mode while the engine is running.

This mode is suitable for ordinary driving.

“HI” (high) mode—

The vehicle height is about 40 mm (1.6 in.) higher at rear than the “N” mode height.

This mode is suitable when driving on the bumpy roads and through water.

However, when the vehicle speed exceeds about 30 km/h (19 mph) or over in the “HI” mode, the “N” mode is automatically selected.

⚠ CAUTION

The “HI” mode should be used for severe off–road driving condition only. Because the vehicle’s center of gravity is higher in this setting, the vehicle may become unstable when turning abruptly, resulting in accident.

“LO” (low) mode—

The vehicle height is about 20 mm (0.8 in.) lower at rear than the “N” mode height.

This mode allows you easy access to the vehicle (getting in and out) and easy loading and unloading operation.

This mode is available when the vehicle speed is under about 12 km/h (7 mph).

NOTICE

Use the “LO” mode when the vehicle is stopped. Otherwise, when the vehicle speed exceeds about 12 km/h (7 mph), “N” mode is selected automatically. So be careful when you drive in any place where the overhead height is limited.

(b) Vehicle height mode changing condition

To change the vehicle height, it is necessary to meet the following conditions.

- The engine should be running.
- The height control “OFF” indicator light should go off.
- When selecting a mode, there is a vehicle speed limit. Refer to the following table.

Yes = The mode can be selected.
No = The mode cannot be selected.

	“LO” mode	“N” mode	“HI” mode
Under about 12 km/h (7 mph)	Yes	Yes	Yes
Under about 30 km/h (19 mph)	No	Yes	Yes
About 30 km/h (19 mph) or over	No	Yes	No

In the following cases, the rear height control suspension will not operate.

- The underbody of the vehicle has touched the surface on bumpy roads.
- The area around the rear suspension is coated with ice.

If the vehicle is moved to its usual location or the ice is removed and the height select switch is pressed, the vehicle height control cannot be operated. In this case, turn off and restart the engine, then push the control switches.

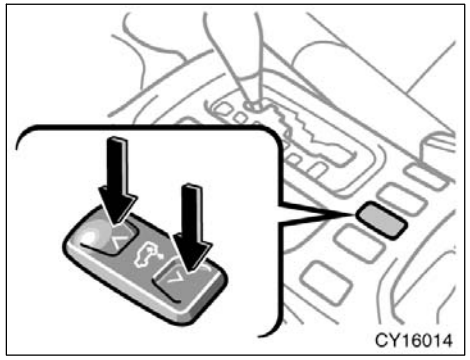

(c) Vehicle height adjustment

To change the mode, push the height select switch on either side of “∧” (higher) or “∨” (lower).

The height control indicator light indicates which mode is selected. (See “(e) Height control indicator light” described below.)

Selecting the “HI” mode—

Push the height select switch on the “∧” side when the vehicle speed is under about 30 km/h (19 mph).

To change the “N” mode to “HI”, push the switch once.

To change the “LO” mode to “HI”, push the switch twice. It takes about 30 seconds until the “LO” mode changes to the “HI” mode.

Selecting the “N” mode—

To change the “HI” mode to “N”, push the height select switch on the “∨” side once.

To change the “LO” mode to “N”, push the height select switch on the “∧” side once.

Selecting the “LO” mode—

Push the height select switch on the “∨” side while the vehicle is stopped.

To change the “N” mode to “LO”, push the switch once.

To change the “HI” mode to “LO”, push the switch twice.

Even if the engine is stopped while the vehicle height is being lowered, the operation continues for up to 25 seconds. If, within this 25 seconds, any of the side doors or the back door is opened, operation will continue for a further 15 seconds.

NOTICE

- ***If the vehicle height is changed frequently when the vehicle is heavily loaded, the compressor may overheat, causing the vehicle height adjustment operation to stop.***
- ***Before you lower the vehicle height with the height select switch, check under the vehicle to make sure nothing to damage the vehicle or no one to be injured is there and that the underbody of the vehicle does not touch the ground.***
- ***After unloading, the height of a vehicle equipped with the rear height control air suspension becomes slightly higher than the normal vehicle height. Take sufficient care where the overhead height is restricted.***
- ***Do not select the “LO” mode in the bumpy roads. If the underbody of the vehicle touches the rugged road surface, the vehicle may be damaged.***

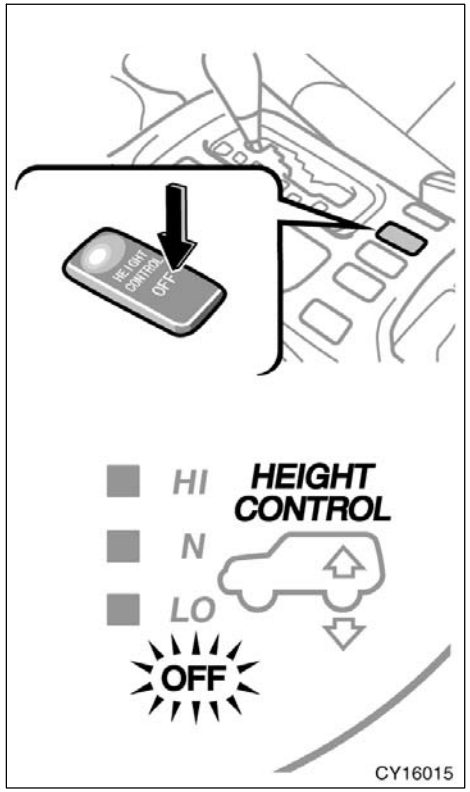

(d) Turning off the rear height control air suspension

To turn off the rear height control air suspension with the vehicle stopped, push the “HEIGHT CONTROL OFF” switch. The height control “OFF” indicator light comes on and the vehicle height is fixed in the same mode as the height control switch is pushed.

This status is memorized in the system even after the engine is stopped.

If you push the switch again, the height control “OFF” indicator light goes out and the rear height control air suspension is turned on.

Even after the rear height control air suspension is turned off with the “HEIGHT CONTROL OFF” switch, if the vehicle speed exceeds 30 km/h (19 mph), the rear height control air suspension automatically selects the “N” mode.

⚠ CAUTION

If you drive through deep water over about 700 mm (28 in.) in depth, put the vehicle height in the “HI” mode with the height select switch and then turn off the rear height control air suspension by pushing the “HEIGHT CONTROL OFF” switch.

NOTICE

- ***When jacking up or installing tire chains, be sure to turn off the rear height control air suspension by pushing the “HEIGHT CONTROL OFF” switch and stop the engine. Otherwise, the vehicle height may change because of the automatic leveling function, resulting in an unexpected accident.***
- ***If your vehicle must be towed, put the vehicle height in the “N” mode and turn off the rear height control air suspension. Otherwise, the vehicle height may change because of the automatic leveling function, resulting in an unexpected accident.***
- ***If your vehicle gets ditched, turn off the rear height control air suspension with the “HEIGHT CONTROL OFF” switch. Otherwise, the vehicle height may change because of the automatic leveling function resulting in an unexpected accident.***

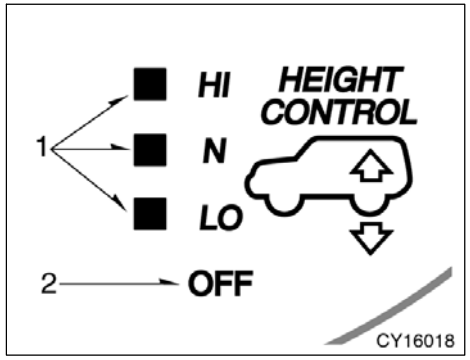

(e) Height control indicator lights

1. Height control indicator lights
2. Height control “OFF” indicator light

When the ignition switch is turned on, all the indicator lights come on. The indicator light showing the present mode only remains on and all other lights go off after a few seconds. This means the system operates correctly.

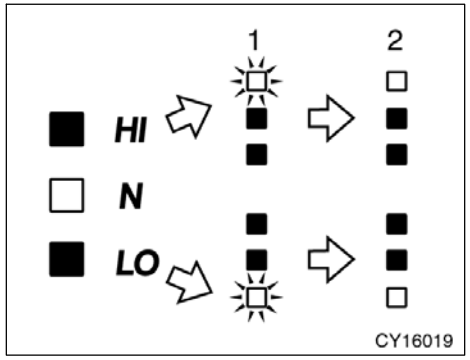

If you change the vehicle height mode, the indicator lights change as follows:

When changing the vehicle height from the “N” mode to “HI”:

1. The “N” mode indicator light goes off and the “HI” mode indicator light blinks.
2. After the vehicle height control reaches the “HI” mode, the “HI” mode indicator light remains on.

If the underbody of the vehicle has touched the surface on bumpy roads or the area around the rear suspension is coated with ice, the vehicle height cannot be lowered with the height select switch. The height control indicator lights change as follows:

1. The present mode indicator light goes off and the selected mode indicator light blinks.
2. The selected mode indicator light goes off. (The vehicle height does not change.) The present mode indicator light comes on again.

In this case, even if the vehicle is moved to its usual location or the ice is removed and the height select switch is pressed, vehicle height control cannot be operated. Turn off the engine once and then restart it.

Height control “OFF” indicator light: When the ignition switch is turned on, this light comes on. If it goes out after a few seconds, the rear height control air suspension operates correctly. If you push the “HEIGHT CONTROL OFF” switch, the rear height control air suspension is turned off. The height control “OFF” indicator light comes on.

In the following cases, there is a problem somewhere in the rear height control air suspension. Although there is no problem to continue normal driving, have the rear height control air suspension checked by your Toyota dealer as soon as possible.

- The height control “OFF” indicator light does not come on when the ignition switch is turned on.
- The height control “OFF” indicator light blinks.

(f) Parking and stopping tips

If you immediately stop the engine to park the vehicle after off–road driving, the vehicle height is lowered slightly as the vehicle becomes cool. When parking, make sure there is nothing that will be in contact with the underbody of the vehicle. When you start the engine, the vehicle returns to the previous height.

If you park the vehicle for a long time, the vehicle height may be gradually lowered. When parking for a long time, make sure there is nothing that will be in contact with the underbody of the vehicle. When you start the engine, the vehicle returns to the previous height.

If you stop the engine, the vehicle height may change in accordance with the change in the temperature. When you start the engine, the vehicle returns to the previous height.

(g) Rear height control failure warning

If there is a problem somewhere in the rear height control air suspension, the “N” mode is automatically selected. If this occurs, the height control “OFF” indicator light blinks and the vehicle height control cannot be activated until the malfunction is corrected. If this is the case, bring your vehicle to your Toyota dealer as soon as possible and have it checked.

Tire pressure warning system—

The tire pressure warning system is designed to provide warning when tire inflation pressure of one or more of your tires (including the spare tire) is low. The low tire pressure warning light comes on to inform you that low tire inflation pressure may hamper driving.

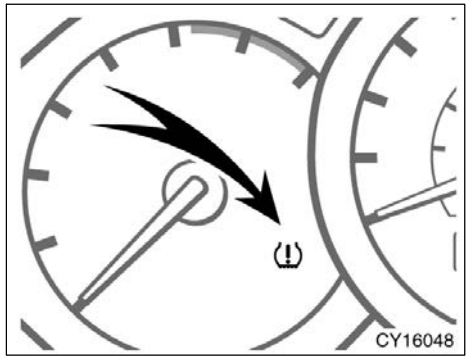

LOW TIRE PRESSURE WARNING LIGHT

This light comes on when the ignition key is turned to the “ON” position. It goes off after a few seconds. This indicates that the tire pressure warning system is functioning properly.

If the low tire pressure warning light comes on or blinks, do the following.

If the warning light comes on:

Stop your vehicle in a safe place as soon as possible and check that the inflation pressure of all tires (including the spare tire) is as specified on the tire and loading information label. (See “Checking tire inflation pressure” on page 381 in Section 7–2.) If the warning light comes on even after tire inflation pressure adjustment, you may have a flat tire. If you have a flat tire, replace it with the spare tire. For details, see “If you have a flat tire” on page 335 in Section 4.

The warning light goes off a few minutes after air is put into the deflated tire.

This warning light may turn on due to natural causes such as natural air leaks or tire pressure changes caused by temperature. In this case, adjusting the tire pressure will turn off the warning light.

⚠ CAUTION

When the tire pressure warning light comes on, observe the following instructions:

- **Depending on the conditions, reduce to an appropriate speed as soon as possible.**
- **Adjust the tire pressure to the specified level as soon as possible.**
- **Avoid abrupt steering wheel maneuvering and braking. Tire deterioration may reduce steering wheel control and brake effectiveness. This may lead to serious injury or death.**
- **The tire pressure warning system may not activate immediately if sudden bursts of air leakage occur.**

NOTICE

- ***Do not use liquid sealants for a flat tire as air pressure sensors will be damaged.***
- ***When the tires must be repaired or replaced, have them repaired or replaced by the nearest Toyota dealer or authorized tire dealer. The tire pressure sensors will be affected by the installation or removal of tires.***
- ***The tire pressure warning system is not to be used as a substitute for regular inspections. Be sure to check the air pressure in the tires on a regular basis.***
- ***When the tires must be replaced, replace the grommets for air pressure sensors as well.***

If the warning light blinks:

The tire pressure warning system may be malfunctioning. Contact your Toyota dealer.

SYSTEM MALFUNCTION

The tire pressure warning system does not function properly under certain circumstances. In the following cases, the low tire pressure warning light may not come on even if the tire inflation pressure is low, or it may come on when the tire inflation pressure is actually normal.

- Electric devices or facilities using similar radio wave frequencies are nearby.
- A radio set to similar frequencies is in use.
- A lot of snow or ice covers the vehicle, in particular, around the wheels or wheel housings.
- The tires are not equipped with an air pressure sensor.
- Snow tires or tire chains are used.
- Non–genuine Toyota wheels are used.
- The sensor battery is expired.
- Radio waves from the air pressure sensor installed on the spare tire cannot be received.

CAUTION

- **The use of non–genuine wheels will cause the air pressure sensors to transmit the electronic code in different manner, resulting in the system failure.**
- **The use of different type of tires with genuine wheels may also cause the malfunction of the system.**

CY16049

⚠ CAUTION

When the tire pressure monitoring system warning light is lit, one or more of your tires is significantly under−inflated. You should stop and check your tires as soon as possible, and inflate them to the proper pressure as indicated on the vehicle’s tire information placard. Driving on a significantly under−inflated tire causes the tire to overheat and can lead to tire failure. Under−inflation also reduces fuel efficiency and tire tread life, and may affect the vehicle’s handling and stopping ability. Each tire, including the spare, should be checked monthly when cold and set to the recommended inflation pressure as specified in the vehicle placard and owner’s manual.

For vehicles sold in U.S.A.

This device complies with Part 15 of the FCC Rules. Operation is subject to the following two conditions:

(1) This device may not cause harmful interference, and (2) this device must accept any interference received, including interference that may cause undesired operation.

NOTICE:
This equipment has been tested and found to comply with the limits for a Class B digital device, pursuant to Part 15 of the FCC Rules. These limits are designed to provide reasonable protection against harmful interference in a residential installation. This equipment generates, uses and can radiate radio frequency energy and, if not installed and used in accordance with the instructions, may cause harmful interference to radio communications. However, there is no guarantee that interference will not occur in a particular installation. If this equipment does cause harmful interference to radio or television reception, which can be determined by turning the equipment off and on, the user is encouraged to try to correct the interference by one or more of the following measures:

- Reorient or relocate the receiving antenna.
- Increase the separation between the equipment and receiver.
- Connect the equipment into an outlet on a circuit different from that to which the receiver is connected.
- Consult the dealer or an experienced radio/TV technician for help.

FCC WARNING:
Changes or modifications not expressly approved by the party responsible for compliance could void the user’s authority to operate the equipment.

For vehicles sold in Canada

Operation is subject to the following two conditions:

(1) this device may not cause interference, and (2) this device must accept any interference, including interference that may cause undesired operation of the device.

—Replacing tires and wheels

When replacing the wheels, be sure to install air pressure sensors on the wheels.

There are 3 ways to set up the air pressure sensors:

a. Remove the sensor from the old wheel and install it to the new wheel.

b. Keep the same wheel with air pressure sensor and replace only the tire.

c. Use a new wheel and sensor. In this case, you have to register an ID code for a new sensor.

⚠ CAUTION

Have the tires, wheels or sensors replaced and ID codes registered by a Toyota dealer. If you need sensors, purchase from a Toyota dealer.

Parking brake

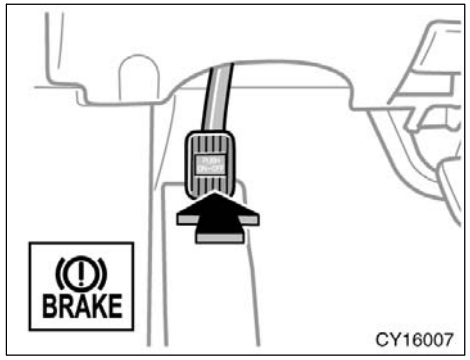

When parking, firmly apply the parking brake to avoid inadvertent creeping.

To set: Fully depress the parking brake pedal. For better holding power, first depress the brake pedal and hold it while setting the parking brake.
To release: Depress the parking brake pedal once again.

To remind you that the parking brake is set, the parking brake reminder light in the instrument panel remains on until you release the parking brake.

⚠ CAUTION

Before driving, be sure the parking brake is fully released and the parking brake reminder light is off.

Cruise control

The cruise control allows you to cruise the vehicle at a desired speed over 40 km/h (25 mph) even with your foot off the accelerator pedal.

Your cruising speed can be maintained up or down grades within the limits of engine performance, although a slight speed change may occur when driving up or down the grades. On steeper hills, a greater speed change will occur so it is better to drive without the cruise control.

⚠ CAUTION

- **To help maintain maximum control of your vehicle, do not use the cruise control when driving in heavy or varying traffic, or on slippery (rainy, icy or snow–covered) or winding roads.**
- **Avoid vehicle speed increases when driving downhill. If the vehicle speed is too fast in relation to the cruise control set speed, cancel the cruise control then downshift the transmission to use engine braking to slow down.**

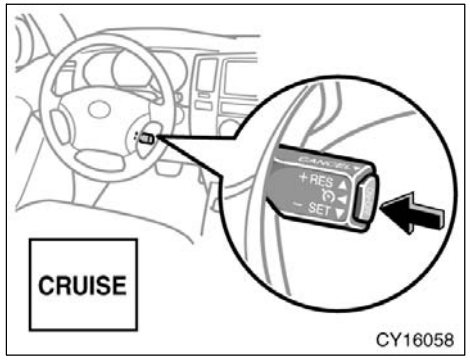

TURNING THE SYSTEM ON

To operate the cruise control, press the “ON–OFF” button. This turns the system on. The indicator light in the instrument panel shows that you can now set the vehicle at a desired cruising speed. Another press will turn the system completely off.

⚠ CAUTION

To avoid accidental cruise control engagement, keep the “ON–OFF” button off when not using the cruise control.

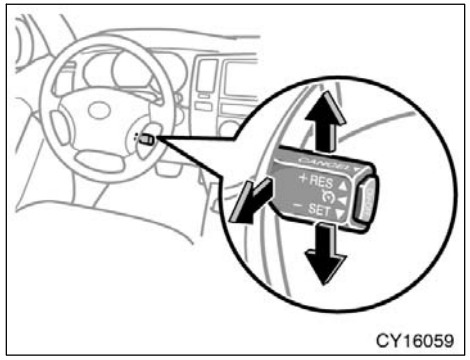

SETTING AT A DESIRED SPEED

The transmission must be in “D” before you set the cruise control speed.

Bring your vehicle to the desired speed, push the lever down in the “– SET” direction and release it. This sets the vehicle at that speed. If the speed is not satisfactory, tap the lever up for a faster speed, or tap it down for a slower speed. Each tap changes the set speed by 1.6 km/h (1.0 mph). You can now take your foot off the accelerator pedal.

If you need acceleration—for example, when passing—depress the accelerator pedal enough for the vehicle to exceed the set speed. When you release it, the vehicle will return to the speed set prior to the acceleration.

CANCELLING THE PRESET SPEED

You can cancel the preset speed by:

a. Pulling the lever in the “CANCEL” direction and releasing it.

b. Depressing the brake pedal.

c. Pushing the “ON–OFF” button.

If the vehicle speed falls below about 40 km/h (25 mph), the preset speed will automatically cancel out.

If the vehicle speed drops 16 km/h (10 mph) below the preset speed, the preset speed will also automatically cancel out.

If the preset speed automatically cancels out other than for the above cases, have your vehicle checked by your Toyota dealer at the earliest opportunity.

RESETTING TO A FASTER SPEED

Push the lever up in the “+ RES” direction and hold it. Release the lever when the desired speed is attained. While the lever is held up, the vehicle will gradually gain speed.

However, a faster way to reset is to accelerate the vehicle and then push the lever down in the “– SET” direction.

RESETTING TO A SLOWER SPEED

Push the lever down in the “– SET” direction and hold it. Release the lever when the desired speed is attained. While the lever is held down, the vehicle speed will gradually decrease.

However, a faster way to reset is to depress the brake pedal and then push the lever down in the “– SET” direction.

Even if you downshift from “D” to “4”, with the cruise control on, engine braking will not be enabled because the cruise control is not cancelled. To decrease the vehicle speed, reset to a slower speed with the cruise control lever or depress the brake pedal. If you use the brake pedal, cruise control is cancelled.

RESUMING THE PRESET SPEED

If the preset speed is cancelled by pulling the control lever or by depressing the brake pedal, pushing the lever up in the “+ RES” direction will restore the speed set prior to cancellation.

CRUISE CONTROL FAILURE WARNING

If the “CRUISE” indicator light in the instrument cluster flashes when using the cruise control, press the “ON–OFF” button to turn the system off and then press it again to turn it on.

If any of the following conditions then occurs, there is some trouble in the cruise control system.

- The indicator light does not come on.
- The indicator light flashes again.
- The indicator light goes out after it comes on.

If this is the case, contact your Toyota dealer and have your vehicle inspected.

SECTION 1–8

OPERATION OF INSTRUMENTS AND CONTROLS

Audio system

Reference 198
Using your audio system 198
Audio remote controls 215
Rear seat audio system 217
Audio system operating hints 225

For vehicle equipped with Navigation system, please refer to the separate “Navigation System Owner’s Manual”.

Reference

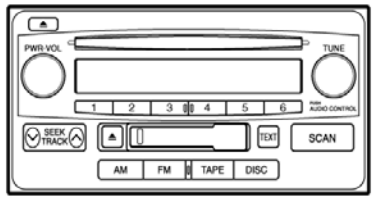

Z17041

Type 1: AM·FM radio/cassette player/compact disc player (with compact disc changer controller)

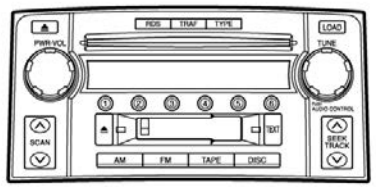

Z17044

Type 2: AM·FM radio/cassette player/compact disc player with changer

Using your audio system——Some basics

This section describes some of the basic features on Toyota audio systems. Some information may not pertain to your system.

Your audio system works when the ignition key is in the “ACC” or “ON” position.

TURNING THE SYSTEM ON AND OFF

Push “PWR·VOL” to turn the audio system on and off.

Push “AM”, “FM”, “TAPE”, “DISC” or “LOAD” to turn on that function without pushing “PWR·VOL”. To turn on the cassette or compact disc player, a cassette or compact disc must be loaded in the player.

You can turn on the each player by inserting a cassette tape or compact disc.

You can turn off each player by ejecting the cassette tape or compact disc. If the audio system was previously off, then the entire audio system will be turned off when you eject the cassette tape or compact disc. If another function was previously playing, it will come on again.

SWITCHING BETWEEN FUNCTIONS

Push “AM”, “FM”, “TAPE”, “DISC” or “LOAD” if the system is already on but you want to switch from one function to another.

TONE AND BALANCE

For details about your system’s tone and balance controls, see the description of your own system.

Tone

How good an audio program sounds to you is largely determined by the mix of the treble, midrange and bass levels. In fact, different kinds of music and vocal programs usually sound better with different mixes of treble, midrange and bass.

Balance

A good balance of the left and right stereo channels and of the front and rear sound levels is also important.

Keep in mind that if you are listening to a stereo recording or broadcast, changing the right/left balance will increase the volume of one group of sounds while decreasing the volume of another.

YOUR RADIO ANTENNA

Your vehicle has an antenna printed on the inside of the rear quarter window.

NOTICE

Attaching the film (especially conductive or metallic type) on the rear quarter glass will noticeably reduce the sensitivity of the radio.

YOUR CASSETTE PLAYER

When you insert a cassette, the exposed tape should face to the right.

NOTICE

Do not oil any part of the player and do not insert anything other than cassette tapes into the slot, or the tape player may be damaged.

YOUR COMPACT DISC PLAYER (type 1)

When you insert a disc, gently push it in with the label side up. The player will play from track 1 through to the end of the disc. Then it will play from track 1 again.

NOTICE

Never try to disassemble or oil any part of the compact disc player. Do not insert anything other than compact discs into the slot.

The player is intended for use with 12 cm (4.7 in.) discs only.

YOUR COMPACT DISC PLAYER WITH CHANGER (type 2)

When you insert a disc, push the “LOAD” button and gently push the disc in with the label side up. This compact disc player can store up to six discs. The player will play from track 1 through to the end of the disc. Then it will play from track 1 of the next disc.

The player is intended for use with 12 cm (4.7 in.) discs only.

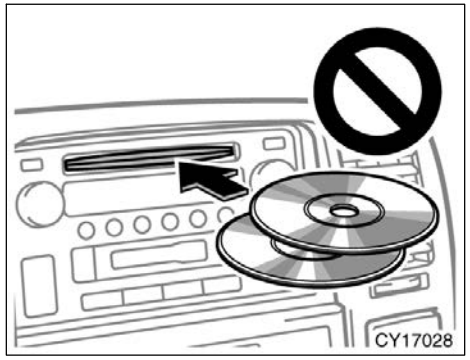

NOTICE

- ***Do not stack up two discs for insertion, or it will cause damage to the compact disc player. Insert only one compact disc into slot at a time.***
- ***Never try to disassemble or oil any part of the compact disc player. Do not insert anything except a compact disc into the slot.***

—Controls and features

▶Type 1

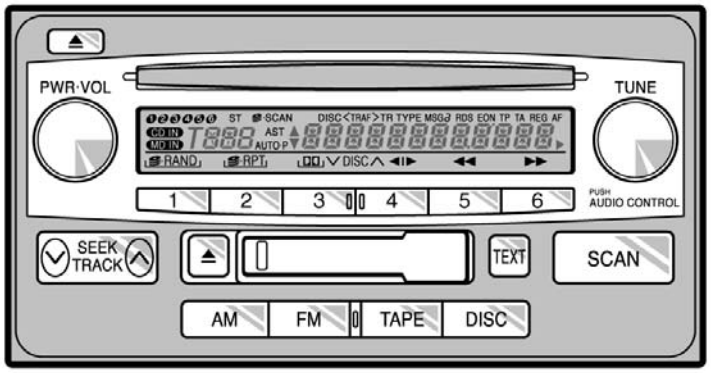

Z17047

Details of specific buttons, controls and features are described in the alphabetical list that follows.

1 2 3 4 5 6 (Preset buttons)

These buttons are used to preset and tune in radio stations.

To preset a station to a button: Tune in the desired station. (See “TUNE” or “SEEK/TRACK”.) Push and hold down the button until you hear a beep—this will set the station to the button. The button number will appear on the display.

To recall a preset station: Push the button for the station you want. The button number and station frequency will appear on the display.

These systems can store one AM and two FM stations for each button. (The display will show “AM”, “FM1” or “FM2” when you push “AM” or “FM” button.)

⏏ (Eject button)

Push the cassette tape eject button to eject a cassette. Push the compact disc eject button to eject a compact disc.

◀❙▶ (Program)

Push “◀❙▶” (preset button 4) to select the other side of a cassette tape. The display indicates which side is currently selected (“▲” indicates the top side, “▼” indicates the bottom side).

Auto–reverse feature: After the cassette player reaches the end of a tape side, it automatically reverses and begins to play the other side. This is true whether the cassette was playing or fast forwarding.

◀◀/▶▶ (Reverse/Fast forward button)

Cassette player

Push “▶▶” (preset button 6) to fast forward a cassette tape. “FF” will appear on the display. Push “◀◀” (preset button 5) to rewind a tape. “REW” will appear on the display.

To stop the tape while it is fast forwarding, push “▶▶” or “TAPE” button. To stop the tape while it is rewinding, push “◀◀” or “TAPE” button.

If a tape rewinds completely, the cassette player will stop and then play that same side. If a tape fast forwards completely, the cassette will play the other side of the tape using the auto–reverse feature.

Compact disc player

Push and hold “▶▶” (preset button 6) or “◀◀” (preset button 5) to fast forward or reverse within a compact disc. When you release the button, the compact disc player will resume playing.

AM

Push the “AM” button to turn on the radio and select the AM band. “AM” will appear on the display.

AUDIO CONTROL (Tone and sound balance adjustment function)

By using the “AUDIO CONTROL” knob, you can adjust the tone and sound balance. On some models, you can also turn on or off the surround function.

Each time you push this knob, the mode changes. To adjust the tone and balance and turn on or off the surround function, turn the knob.

BAS: Adjusts low–pitched tones. The display ranges from –5 to 5.

MID: Adjusts mid–pitched tones. The display ranges from –5 to 5.

TRE: Adjusts high–pitched tones. The display ranges from –5 to 5.

FAD: Adjusts the sound balance between the front and rear speakers. The display ranges from F7 to R7.

BAL: Adjusts the sound balance between the right and left speakers. The display ranges from L7 to R7.

SURROUND: Turn on or off the surround function. “SURROUND ON” or “SURROUND OFF” will appear on the display.

DISC (Compact disc)

Push the “DISC” button to play a compact disc.

When the audio system is set into compact disc operation, the display shows the track, or track and disc number currently being played.

Error messages

If the player malfunctions, your audio system will display one of the six following error messages.

“WAIT”: The compact disc player unit may be too hot. Allow the player to cool down.

“ERROR 1”: The disc may be dirty, damaged or inserted incorrectly (up–side down). Clean the disc and re–insert it.

“NO DISC”: The compact disc changer of separate unit is empty. Insert a disc.

“ERROR 3”: There is a problem inside the system. Eject the disc or magazine. Set the disc or magazine again.

“ERROR 4”: Over–current. Ask your Toyota dealer to inspect.

“CD OPEN”: The compact disc changer lid of separate unit is open. Close the compact disc changer lid.

If the malfunction still exists, take your vehicle to your Toyota dealer.

∨ DISC ∧

With compact disc changer only—

Use these buttons to select the disc you want to listen to.

Push “∨” (preset button 3) or “∧” (preset button 4) until the number of the disc you want to listen appears on the display.

Dolby® DD B NR*

If you are listening to a tape that was recorded with Dolby® B Noise Reduction, push “DD” (preset button 3). “DD” will appear on the display. Push the button again to turn off Dolby® B NR.

The Dolby NR mode reduces tape noise by about 10 dB. For best sound reproduction, play your tapes with this button on or off according to the mode used to record the tape.

*: Dolby noise reduction manufactured under license from Dolby Laboratories Licensing Corporation. “DOLBY” and the double D symbol DD are trademarks of Dolby Laboratories Licensing Corporation.

FM

Push the “FM” button to turn on the radio and select the FM band. “FM1” or “FM2” will appear on the display. This system allows you to set twelve FM stations, two for each of the preset button.

PWR·VOL (Power and Volume)

Push “PWR·VOL” to turn the audio system on and off. Turn “PWR·VOL” to adjust the volume.

RAND (Random)

There are two random features—you can either listen to the tracks on one compact disc in random order, or listen to the tracks on all the compact discs in the magazine in random order.

To play the tracks on one disc in random order:
Quickly push and release “RAND” (preset button 1). “RAND” will appear on the display and the player will perform the tracks on the disc you are listening to in random order. To turn off the random feature, push this button again.

With compact disc changer only—

To play all the tracks in the magazine in random order:
Push and hold “RAND” (preset button 1) until you hear a beep. “RAND” will appear on the display and the player will perform all the tracks on all the discs in the magazine in random order. To turn off the random feature, push this button again.

RPT (Repeat)

Cassette player

Push “RPT” (preset button 2) while the track is playing. “RPT” will appear on the display. When the track ends, it will automatically rewind and replay. To turn off the repeat feature, push this button again.

There must be at least 3 seconds of blank space between tracks in order for the repeat feature to work correctly.

Compact disc player

There are two repeat features—You can either replay a disc track or a whole compact disc.

Repeating a track:
Quickly push and release “RPT” (preset button 2) while the track is playing. “RPT” will appear on the display. When the track ends, it will automatically replay. To turn off the repeat feature, push this button again.

With compact disc changer only—

Repeating a disc:
Push and hold “RPT” (preset button 2) until you hear a beep. “RPT” will appear on the display. The player will repeat all the tracks on the disc you are listening to. When the disc ends, the player will automatically go back to the first track on the disc and replay. To turn off the repeat feature, push this button again.

SCAN

Radio

You can either scan all the frequencies on a band or scan only the preset stations for that band.

To scan the preset stations:
Push and hold the “SCAN” button until you hear a beep. The radio will tune in the next preset station up the band, stay there for 5 seconds, and then move to the next preset station. To stop scanning, push this button again.

To scan all the frequencies:
Quickly push and release the “SCAN” button. The radio will find the next station up the station band, stay there for 5 seconds, and then scan again to the next station. To stop scanning, push this button again.

Compact disc player

There are two scan features—you can either scan the tracks on a specific disc or scan the first tracks of all the discs in the magazine.

Scanning the tracks on a disc:
Quickly push and release the “SCAN” button. “SCAN” will appear on the display and the player will scan all the tracks on the disc you are listening to. To stop scanning, push this button again. If the player scanned all the tracks on the disc, it will stop scanning.

With compact disc changer only—

Scanning the first tracks of all the discs in the magazine:
Push the “SCAN” button until you hear a beep. “ ·SCAN” will appear on the display and the player will scan the first track of the next disc. To stop scanning, push this button again. If the player has scanned all the discs, it will stop scanning.

SEEK/TRACK (Seeking/Track up/down)

Radio

In the seek mode, the radio finds and plays the next station up or down the station band.

To seek the next station, quickly push and release “∧” or “∨” side of the “SEEK/TRACK” button. Do this again to find the station after that.

Cassette Player

Use this button to skip up or down to locate a song or recording.

You can select up to nine recordings (including current one).

A blank space of at least 3 seconds is considered to be a start of a recording.

When the beginning of a tape is reached, the player automatically resumes play.

When the end of the tape is reached, the player automatically reverses sides and resumes normal play.

In addition, the feature may not work well with some spoken word, live, or classical recordings.

Compact disc player

Use this button to skip up or down to a different track.

Push “∧” or “∨” side of the “SEEK/TRACK” button until the number of the track you want to listen to appears on the display. If you want to return to the beginning of the current track, quickly push the down side of the button one time.

ST (Stereo reception) display

Your radio automatically changes to stereo reception when a stereo broadcast is received. “ST” appears on the display. If the signal becomes weak, the radio reduces the amount of channel separation to prevent the weak signal from creating noise. If the signal becomes extremely weak, the radio switches from stereo to mono reception.

TAPE

Push the “TAPE” button to play a cassette tape.

TEXT

This button is used to change the display for the compact disc that contains text data.

To change the display, quickly push and release the “TEXT” button while the compact disc is playing. The display changes in the order from the elapsed time to disc title to track title, then back to the elapsed time.

If this button is pushed while a compact disc that does not contain text data is playing, “NO TITLE” will appear on the display.

If the entire disc or track title does not appear on the display, push and hold the button until you hear a beep. The rest of the title will appear.

TUNE (Tuning)

Turn the “TUNE” knob clockwise to step up the frequency. Turn the knob counterclockwise to step down the frequency.

▶**Type 2**

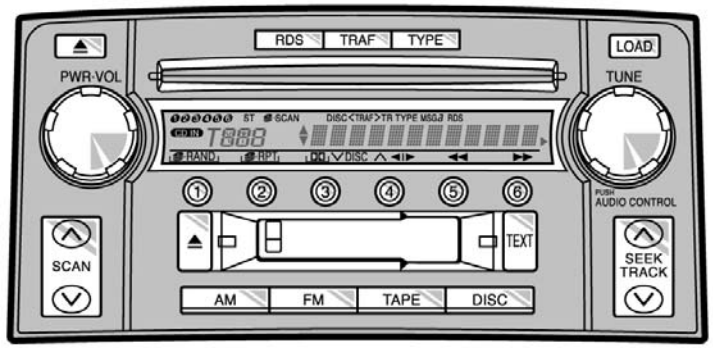

Z17050

Details of specific buttons, controls and features are described in the alphabetical list that follows.

1 2 3 4 5 6 (Preset buttons)

These buttons are used to preset and tune in radio stations.

To preset a station to a button: Tune in the desired station. (See “TUNE” or “SEEK/TRACK”.) Push and hold down the button until you hear a beep—this will set the station to the button. The preset button number will appear on the display.

RDS stations will be preset to the buttons when you turn on the RDS. (See “RDS” button.)

To recall a preset station: Push the button for the station you want. The preset button number and station frequency will appear on the display.

This radio can store one AM, two FM and RDS stations for each button. (The display will show “AM”, “FM1”, “FM2” or “FM TYPE” when you push “AM” or “FM” button.)

⏏ (Eject button)

Cassette player

This button is used to eject a cassette.

Compact disc player

This button is used to eject one or all compact discs.

To eject the current compact disc, push and release the compact disc eject button.

To eject a specific disc, push “∨” (preset button 3) or “∧” (preset button 4) until the number of the disc you want to eject is displayed. Push and release the eject button.

To eject all discs at a time, press and hold the eject button until you hear a beep. The last compact disc played before pushing the button will be ejected first. If the ejected disc is not removed for a long time, the eject function will be cancelled.

◀❙▶ (Program)

Push “◀❙▶” (preset button 4) to select the other side of a cassette tape. The display indicates which side is currently selected (“▲” indicates the top side, “▼” indicates the bottom side).

Auto–reverse feature: After the cassette player reaches the end of a tape side, it automatically reverses and begins to play the other side. This is true whether the cassette was playing or fast forwarding.

◀◀/▶▶ (Reverse/Fast forward button)

Cassette player

Push “▶▶” (preset button 6) to fast forward a cassette tape. “FF” will appear on the display. Push “◀◀” (preset button 5) to rewind a tape. “REW” will appear on the display.

To stop the tape while it is fast forwarding, push “▶▶” or “TAPE” button. To stop the tape while it is rewinding, push “◀◀” or “TAPE” button.

If a tape rewinds completely, the cassette player will stop and then play that same side. If a tape fast forwards completely, the cassette will play the other side of the tape using the auto–reverse feature.

Compact disc player

Push and hold “▶▶” (preset button 6) or “◀◀” (preset button 5) to fast forward or reverse within a compact disc. When you release the button, the compact disc player will resume playing.

AM

Push the “AM” button to turn on the radio and select the AM band. “AM” will appear on the display.

AUDIO CONTROL (Tone and sound balance adjustment function)

By using the “AUDIO CONTROL” knob, you can adjust the tone and sound balance, and turn on or off the surround function.

Each time you push this knob, the mode changes. To adjust the tone and balance and turn on or off the surround function, turn the knob.

BAS: Adjusts low–pitched tones. The display ranges from –5 to 5.

MID: Adjusts mid–pitched tones. The display ranges from –5 to 5.

TRE: Adjusts high–pitched tones. The display ranges from –5 to 5.

FAD: Adjusts the sound balance between the front and rear speakers. The display ranges from F7 to R7.

BAL: Adjusts the sound balance between the right and left speakers. The display ranges from L7 to R7.

SURROUND: Turn on or off the surround function. “SURROUND ON” or “SURROUND OFF” will appear on the display.

DISC (Compact disc)

Push the “DISC” button to play a compact disc.

When the audio system is set into compact disc operation, the display shows the track, or track and disc number currently being played.

Error messages

If the player malfunctions, your audio system will display one of the six following error messages.

“WAIT”: The compact disc player unit may be too hot. Allow the player to cool down.

“ERROR 1”: The disc may be dirty, damaged or inserted incorrectly (up–side down). Clean the disc and re–insert it.

“NO DISC”: The compact disc changer of separate unit is empty. Insert a disc.

“ERROR 3”: There is a problem inside the system. Eject the disc or magazine. Set the disc or magazine again.

“ERROR 4”: Over–current. Ask your Toyota dealer to inspect.

“CD OPEN”: The compact disc changer lid of separate unit is open. Close the compact disc changer lid.

If the malfunction still exists, take your vehicle to your Toyota dealer.

∨ DISC ∧

Use these buttons to select a disc you want to listen to.

Push “∨” (preset button 3) or “∧” (preset button 4) until the number of the disc you want to listen appears on the display.

Dolby® DD B NR*

If you are listening to a tape that was recorded with Dolby® B Noise Reduction, push “DD” (preset button 3). “DD” will appear on the display. Push the button again to turn off Dolby® B NR.

The Dolby NR mode reduces tape noise by about 10 dB. For best sound reproduction, play your tapes with this button on or off according to the mode used to record the tape.

*: Dolby noise reduction manufactured under license from Dolby Laboratories Licensing Corporation. “DOLBY” and the double D symbol DD are trademarks of Dolby Laboratories Licensing Corporation.

FM

Push the “FM” button to turn on the radio and select the FM band. “FM1”, “FM2” or “FM TYPE” will appear on the display. This system allows you to set twelve FM and six RDS stations, three for each of the preset button. If the RDS is off or RDS stations are not preset to the preset buttons, “FM TYPE” will not appear on the display.

LOAD

This button is used to load the compact discs in the compact disc player. This player can store up to six discs.

To load one compact disc only, quickly push and release the button, then insert a compact disc. After the disc is loaded, the shutter of the slot will close.

If no compact disc is inserted, the shutter will close after 15 seconds.

To load multiple compact discs, push and hold the button (until you hear a beep when the audio system is on), then insert the first compact disc. After the disc is loaded, the shutter of the slot will close. After a few seconds, the shutter will automatically open again so the next disc can be inserted. The same process can be applied for loading the rest of the discs. If the player is full of discs, “DISC FULL” will appear on the display.

If no compact disc is inserted, the shutter will close after 15 seconds.

PWR·VOL (Power and Volume)

Push “PWR·VOL” to turn the audio system on and off. Turn “PWR·VOL” to adjust the volume.

RDS (Radio Data System)

Your audio system is equipped with Radio Data System (RDS). RDS station providing good reception is automatically selected if current reception worsens.

The “RDS” button turns the RDS on and off. This button is operational except in AM mode.

To turn on the RDS, push and hold this button until you hear a beep and “RDS” will appear on the display. At this time, the radio starts to search the RDS stations and “RDS SEARCH” will flash on the display.

Quickly push and release this button when the RDS turns on, the radio starts to search the RDS stations and “RDS SEARCH” will flash on the display.

When the RDS stations are found, “FOUND” and the number of the RDS stations will appear on the display, and you will hear two beeps. The stations will be preset to the preset buttons.

If the RDS stations can not be found, “NO RDS ST” will appear on the display and you will hear a beep, and the display returns to the previous mode.

To turn the RDS off, push the button until you hear a beep again.

RAND (Random)

There are two random features—you can either listen to the tracks on one compact disc in random order, or listen to the tracks on all the compact discs in the magazine in random order.

To play the tracks on one disc in random order:
Quickly push and release “RAND” (preset button 1). “RAND” will appear on the display and the player will perform the tracks on the disc you are listening to in random order. To turn off the random feature, push this button again.

To play all the tracks in the magazine in random order:
Push and hold “RAND” (preset button 1) until you hear a beep. “RAND” will appear on the display and the player will perform all the tracks on all the discs in the magazine in random order. To turn off the random feature, push this button again.

RPT (Repeat)

Cassette player

Push “RPT” (preset button 2) while the track is playing. “RPT” will appear on the display. When the track ends, it will automatically rewind and replay. To turn off the repeat feature, push this button again.

There must be at least 3 seconds of blank space between tracks in order for the repeat feature to work correctly.

Compact disc player

There are two repeat features—You can either replay a disc track or a whole compact disc.

Repeating a track:
Quickly push and release “RPT” (preset button 2) while the track is playing. “RPT” will appear on the display. When the track ends, it will automatically replay. To turn off the repeat feature, push this button again.

Repeating a disc:
Push and hold “RPT” (preset button 2) until you hear a beep. “RPT” will appear on the display. The player will repeat all the tracks on the disc you are listening to. When the disc ends, the player will automatically go back to the first track on the disc and replay. To turn off the repeat feature, push this button again.

SCAN

Radio

You can either scan all the frequencies on a band or scan only the preset stations for that band.

To scan the preset stations:
Push and hold “∧” or “∨” side of the “SCAN” button until you hear a beep. The radio will tune in the next preset station up or down the band, stay there for 5 seconds, and then move to the next preset station. To stop scanning, push this button again.

To scan all the frequencies:
Quickly push and release “∧” or “∨” side of the “SCAN” button. The radio will find the next station up or down the station band, stay there for 5 seconds, and then scan again to the next station. To stop scanning, push this button again.

Compact disc player

There are two scan features—you can either scan the tracks on a specific disc or scan the first tracks of all the discs in the magazine.

Scanning the tracks on a disc:
Quickly push and release “∧” or “∨” side of the “SCAN” button. “SCAN” will appear on the display and the player will scan up or down all the tracks on the disc you are listening to. To stop scanning, push this button again. If the player scanned all the tracks on the disc, it will stop scanning.

Scanning the first tracks of all the discs in the magazine:
Push “∧” or “∨” side of the “SCAN” button until you hear a beep. “·SCAN” will appear on the display and the player will scan up or down the first track of the next disc. To stop scanning, push this button again. If the auto changer has scanned all the discs, it will stop scanning.

SEEK/TRACK (Seeking/Track up/down)

Radio

In the seek mode, the radio finds and plays the next station up or down the station band.

To seek the next station, quickly push and release “∧” or “∨” side of the “SEEK/TRACK” button. Do this again to find the station after that.

Cassette Player

Use this button to skip up or down to locate a song or recording.

You can select up to nine recordings (including current one).

A blank space of at least 3 seconds is considered to be a start of a recording.

When the beginning of a tape is reached, the player automatically resumes play.

When the end of the tape is reached, the player automatically reverses sides and resumes normal play.

In addition, the feature may not work well with some spoken word, live, or classical recordings.

Compact disc player

Use this button to skip up or down to a different track.

Push “∧” or “∨” side of the “SEEK/TRACK” button until the number of the track you want to listen to appears on the display. If you want to return to the beginning of the current track, quickly push the down side of the button one time.

ST (Stereo reception) display

Your radio automatically changes to stereo reception when a stereo broadcast is received. “ST” appears on the display. If the signal becomes weak, the radio reduces the amount of channel separation to prevent the weak signal from creating noise. If the signal becomes extremely weak, the radio switches from stereo to mono reception.

TAPE

Push the “TAPE” button to play a cassette tape.

TEXT

Radio

This button is operational only in RDS mode.

When an RDS radio station transmits a text message, “TEXT” will be displayed. At this time, push the “TEXT” button to view the text message. The message display will be canceled if any button that affects the display is pushed. To view the message again, push this button again. After the entire message has been displayed, the message will disappear.

The RDS audio system has memory to store three 64–character messages. To store a message in memory, push and hold the “TEXT” button until you hear a beep.

If three messages are already stored in memory, the oldest message will be overwritten by the new message.

To recall a radio text message, push the “TEXT” button momentarily. This will display the most recent message. Each push of the button will display messages in the order of most to least recent.

If no messages have been stored, or if there are no more messages to be recalled, “NO MESSAGE” will appear on the display, and the message display will be canceled.

The message display will be canceled if you activate any function that affects the display.

Compact disc player

This button is used to change the display for the compact disc that contains text data.

To change the display, quickly push and release the “TEXT” button while the compact disc is playing. The display changes in the order from the elapsed time to disc title to track title, then back to the elapsed time.

If this button is pushed while a compact disc that does not contain text data is playing, “NO TITLE” will appear on the display.

If the entire disc or track title does not appear on the display, push and hold the button until you hear a beep. The rest of the title will appear.

TRAF (Traffic)

This button turns the traffic announcement (TA) feature on and off. This button is operational only in FM mode.

By pushing the “TRAF” button, “TRAF SEEK” will flash on the display and the radio will start seeking any traffic program station.

When a traffic program station is found, “TRAF” will be displayed and you will hear a beep.

After the traffic announcement program is over, the display returns to the previous mode.

If no traffic program station is found, “NO TRAF INFO” appears on the display for a few seconds and the display returns to the previous mode.

To cancel the traffic announcement, push this button again.

TUNE (Tuning)

Turn the “TUNE” knob clockwise to step up the frequency. Turn the knob counterclockwise to step down the frequency.

TYPE (Program Types)

When you push the “TYPE” button while receiving an RDS station, the current program type appears on the display.

Each time you push this button, the program type changes as in the following:

- ROCK
- EASY LIS (Easy listening)
- CLS/JAZZ (Classical music and Jazz)
- R&B (Rhythm and Blues)
- INFORM (Information)
- RELIGION
- MISC (Miscellaneous)
- ALERT (Emergency message)

Audio remote controls (steering switches)

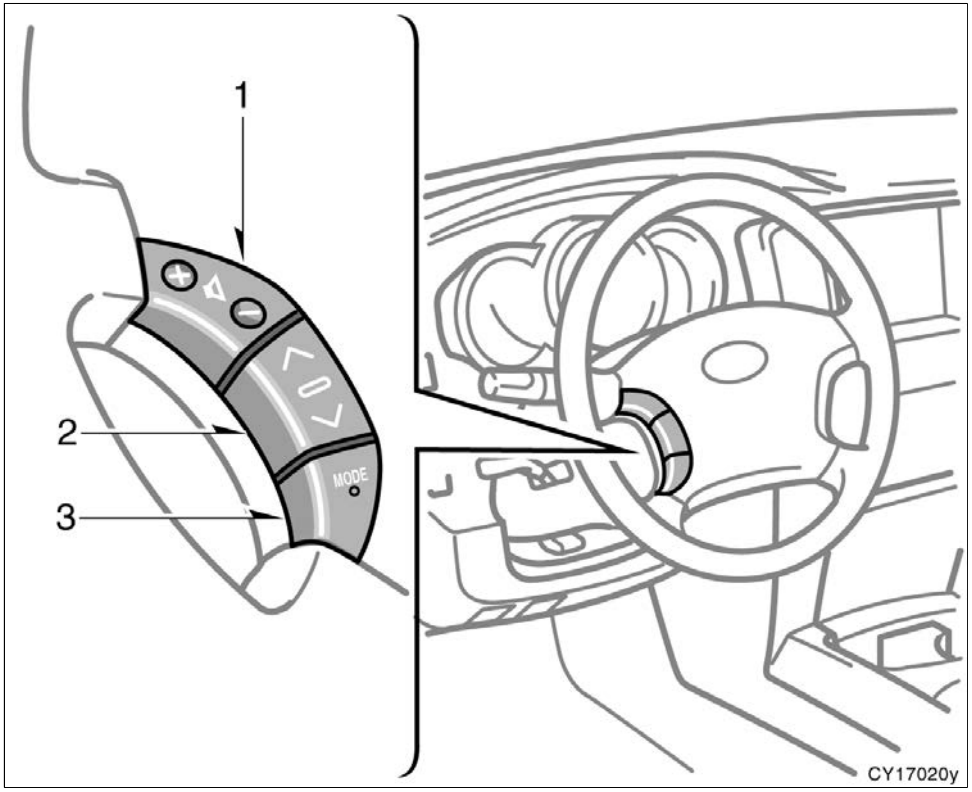

Some parts of the audio system can be adjusted using the switches on the steering wheel.

Details of the specific switches, controls, and features are described below.

1. Volume control switch
2. “∧∨” switch
3. “MODE” switch

1. Volume control switch

Push “+” to increase the volume. The volume continues to increase while the switch is being pushed.

Push “–” to decrease the volume. The volume continues to decrease while the switch is being pushed.

2. “∧∨” switch

Radio

This switch has the following features—

To select a preset station:
Quickly push and release the “∧” or “∨” side of the switch. Do this again to select the next preset station.

To seek a station:
Push and hold the “∧” or “∨” side of the switch until you hear a beep. Do this again to find the next station. If you push the switch on either side during the seek mode, seeking will be cancelled.

Cassette player

This switch has the following features—

To skip to a different track in either direction:
Quickly push and release the “∧” or “∨” side of the switch. “FF 1” or “REW 1” will appear on the display.

Next, push either side of the track switch until the track you want to listen to is set. If you push the switch ten times, the skip function will turn off. (You can skip up to nine tracks at a time.)

When counting the number of the tracks you want to rewind, remember to count the current track as well. For example, if you want to rewind to a song that is two tracks before the song you are listening to, push the “∨” side of the switch three times.

If you push the track switch further than you wanted to, push the other side of the switch. The track number will be increased or reduced.

The track number you select is not valid if it is higher than the number of the tracks remaining on the current side of the cassette.

- When the tape reaches to the beginning, the player will automatically start playing that side.
- After the tape reaches to the end, the player will automatically reverse and start playing the other side.

There must be at least 3 seconds of blank space between tracks for the track switch to work correctly. In addition, the feature may not work well with some spoken, live, or classical recordings.

To fast forward or reverse:
Push and hold the “∧” side of the switch to fast forward a cassette tape. “FF” will appear on the display. Push and hold the “∨” side of the switch to rewind a tape. “REW” will appear on the display.

To stop the tape while it is fast forwarding, push the “∧” side of the switch. To stop the tape while it is rewinding, push the “∨” side of the switch.

If a tape rewinds completely, the cassette player will stop and then play that same side. If a tape fast forwards completely, the cassette will play the other side of the tape using the auto–reverse feature.

Compact disc player

Use this switch to skip up or down to a different track in either direction.

Quickly push and release the “∧” or “∨” side of the switch until the track you want to listen to is set. If you want to return to the beginning of the current track, push the “∨” side of the switch once, quickly.

With compact disc changer only—

Push and hold the “∧” or “∨” side of the switch until the disc you want to listen to is set.

3. “MODE” switch

Push the “MODE” switch to select an audio mode. Each push changes the mode sequentially if the desired mode is ready to use.

To turn the audio system on, push the “MODE” switch.

To turn the audio system off, push and hold the “MODE” switch until the system turns off.

Rear seat audio system—

The rear seat audio system is designed for the rear seat passengers to enjoy the audio sound separately between the front seats and rear seats.

The rear seat audio system can be turned on with the rear audio system controller even if the front audio system is off. When the front audio is turned off, the rear audio system will be turned off simultaneously.

The rear passengers can enjoy all the modes (AM and FM radio, cassette tape player, compact disc player and compact disc player with changer) with the rear seat audio system when a cassette tape and discs are loaded in the front audio system.

When the same mode is selected on the front and rear audio systems at the same time, the system can be operated on the front audio system.

If the radio mode is selected on the front and rear audio systems at the same time, AM and FM modes cannot be changed on the rear seat audio system.

You can enjoy the rear seat audio system with a special headphone. For details, refer to the manufacturer’s instructions.

The wireless headphone can be used within a radius of approximately 7 m (23 ft.) from the rear seat audio system. If the signal becomes weak, the headphone will mute.

You can purchase a wireless headphone at a Toyota dealer.

⚠ CAUTION

Do not operate a motor vehicle while using headphones. Doing so may cause an accident, resulting in injury.

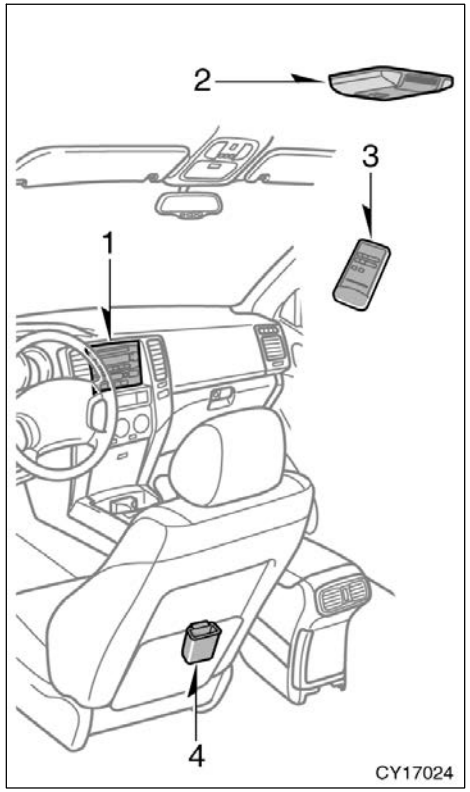

The rear seat audio system consists of following components.

1. Front audio system
2. Rear seat audio system display
3. Rear seat audio system controller
4. Controller holder

—Rear seat audio system controller

The rear seat audio system can be operated with the rear seat audio system controller.

⚠ CAUTION

Do not disassemble or modify the controller. It may cause an accident, fire or electric shock.

NOTICE

Keep the controller away from direct sunlight, high heat and high humidity. These conditions could cause the case to deform or the battery to explode or leak.

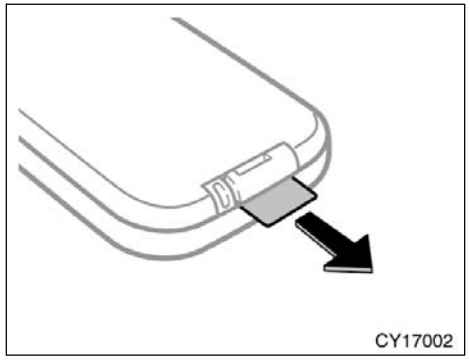

BEFORE USING THE CONTROLLER (for new vehicle owners)

A battery is already set in the controller with an insulating sheet, which prevents the battery from being discharged. Before using the controller, remove the insulating sheet.

USING THE CONTROLLER

To use the rear seat audio system controller, direct the signal output portion of the controller to the signal reception portion of the rear seat audio system display.

The rear seat audio system controller can be operated when the ignition switch is in the “ACC” or “ON” position.

The controller does not operate properly when the signal reception portion of the display is exposed to direct sunlight. Block the display from direct sunlight.

Details of specific buttons, controls, and features of the controller, see “CONTROLLER FEATURES” on page 221 in this Section.

NOTICE

Observe the followings, otherwise the controller may be damaged.

- ***Do not drop or strongly knock the controller against hard objects.***
- ***Do not sit on or place heavy objects on the controller.***

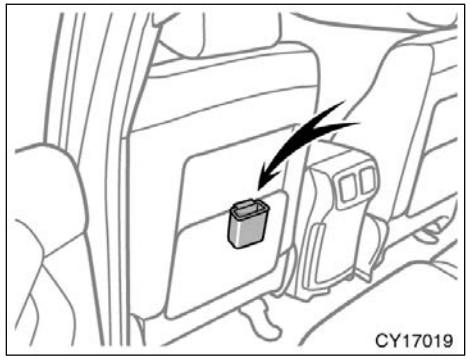

CONTROLLER HOLDER

The controller can be stowed in the holder when it is not in use. The holder can be hooked on the back of the driver’s or front passenger’s seatback.

⚠ CAUTION

To reduce the chance of injury in case of an accident or a sudden stop while driving, stow the controller in the holder when it is not in use.

NOTICE

Do not leave the controller exposed to high temperatures (such as on the instrument panel) for a long time, otherwise the controller may be damaged.

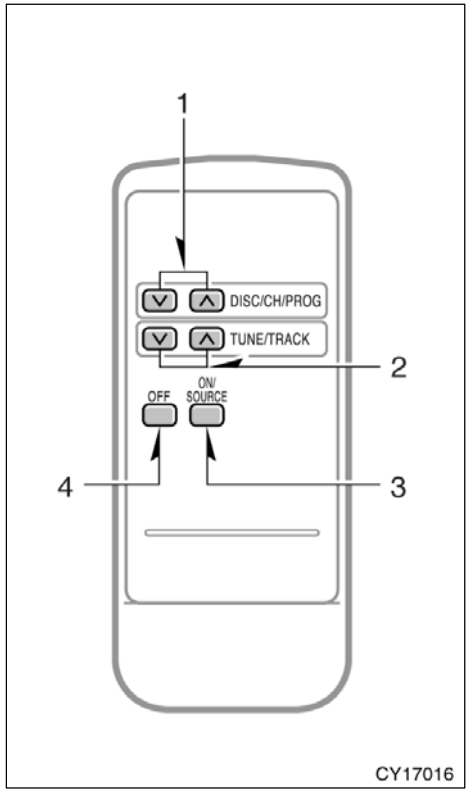

CONTROLLER FEATURES

1. “∨” and “∧” (DISC/CH/PROG) buttons
2. “∨” and “∧” (TUNE/TRACK) buttons
3. “ON/SOURCE” button
4. “OFF” button

1. “∨” and “∧” (DISC/CH/PROG) buttons

Radio

You can scan only the preset stations for the band of the front audio system. (For instructions, see “—Controls and features” on page 201 in this Section.)

To scan the preset stations:
Push the “∨” or “∧” (DISC/CH/PROG) button. The radio will tune in the next preset station up or down the band. The station frequency will appear on the display.

Cassette tape player

Push the “∨” or “∧” (DISC/CH/PROG) button to select the other side of a cassette tape. The display indicates which side is currently selected. (“∧” indicates the top side, “∨” indicates the bottom side.)

Auto–reverse feature: After the cassette player reaches the end of a tape side, it automatically reverses and begins to play the other side. This is true whether the cassette was playing or fast forwarding.

Compact disc player

With compact disc changer only—
Use these buttons to select the disc you want to listen to.

Push the “∨” or “∧” (DISC/CH/PROG) button until the number of the disc you want to listen to appears on the display.

2. “∨” and “∧” (TUNE/TRACK) buttons

Radio

Use the “∨” or “∧” (TUNE/TRACK) button to tune or seek.

Tuning:

Quickly push and release the “∨” or “∧” (TUNE/TRACK) button briefly. Each time you push the button, the radio will step up or down to another frequency. If you push and hold the button and the radio will go into the seek mode.

Seeking:

Push and hold the “∨” or “∧” (TUNE/TRACK) button. The radio will seek up or down for a station of the nearest frequency and will stop on reception. Each time you push the button, the stations will be searched automatically one after another.

Cassette tape player

To fast forward a cassette tape, push and hold the “∧” (TUNE/TRACK) button until “FF” will appears on the display. Push and hold the “∨” (TUNE/TRACK) button until “REW” appears on the display to rewind a tape.

Use this button to skip up or down to locate a song or recording.

You can select up to nine recordings (including current one).

Push the “∨” or “∧” (TUNE/TRACK) button. “FF 1” or “REW 1” will appear on the display.

Next, push either side of the track button until the number on the display reaches the number of tracks you want to skip. If you push the button 10 times, the skip feature will be turned off.

For the skip feature to work correctly a blank space of at least 3 seconds is considered to be a start of a recording.

When the beginning of a tape is reached, the player automatically resumes play.

When the end of the tape is reached, the player automatically reverses sides and resumes normal play.

In addition, the feature may not work well with some spoken, live, or classical recordings.

Compact disc player

Use this button to skip up or down to a different track.

Push the “∨” or “∧” (TUNE/TRACK) button until the number of the track you want to listen to appears on the display. If you want to return to the beginning of the current track, quickly push the “∨” (TUNE/TRACK) button one time.

Push and hold the “∨” or “∧” (TUNE/TRACK) button to fast forward or reverse within a disc. When you release the button, the compact disc player will resume playing.

With compact disc changer only—
You can either scan the tracks on a specific disc or scan the first tracks of all the discs in the changer.

Scanning the tracks on a disc:
Quickly push and release the “∨” or “∧” (TUNE/TRACK) button. “LOAD” will appear on the display and the player will scan all the tracks on the disc you are listening to. To stop scanning, push this button again. If the player scanned all the tracks on the disc, it will stop scanning.

Scanning the first tracks of all the discs in the changer:
Push and hold the “∨” or “∧” (TUNE/TRACK) button. The player will scan the first track of the next disc. To stop scanning, release the button. If the player has scanned all the discs, it will stop scanning.

3. “ON/SOURCE” button

Push the “ON/SOURCE” button to turn on the rear seat audio system.

Use the “ON/SOURCE” button to select an audio mode when the rear seat audio system is on. Each time you push this button, the system changes between the radio, cassette player, compact disc player and compact disc changer.

When you change the mode, the display indicates which mode is selected.

When a cassette tape and discs are not loaded in the front audio system, only a radio mode can be selected in the rear seat audio system.

If you push the “ON/SOURCE” button on rear seat audio system controller to select the casette tape player mode or disc player mode in that case, a beep sounds from front audio system and “INVALID” flashes on the display for 6 seconds, and then the rear audio system returns to the radio mode.

If you push the “ON/SOURCE” button while receiving an emergency broadcast, a beep sounds and “INVALID” appears on the display to indicate that no button can be operated.

Radio

AM mode

When you select the AM mode, “AM” will appear on the display.

FM mode

When you select the FM mode, “FM1” or “FM2” will appear on the display.

If the front audio system receives a traffic announcement (TA) while the rear seat audio system is in the radio mode, “TRAF” will flash on the display and the rear seat audio system will turn off. When the front audio receives a traffic announcement (TA), the rear seat audio system cannot select the AM/FM mode.

Tape mode

“TAPE” appears on the display while this mode is selected.

Compact disc mode

“CD” appears on the display while this mode is selected.

The display shows the track, or track and disc number currently being played.

Error messages

If the player malfunctions, your audio system will display one of the five following error messages.

“WAIT”: The compact disc player unit may be too hot. Allow the player to cool down.

“ERR 1”: The disc may be dirty, damaged or inserted incorrectly (up–side down). Clean the disc and re–insert it.

“ERR 2”: The compact disc changer of separate unit is empty. Insert a disc.

“ERR 3”: There is a problem inside the system. Eject the disc or magazine. Set the disc or magazine again.

“ERR 4”: Over–current. Ask your Toyota dealer to inspect.

“OPEN”: The compact disc changer lid of separate unit is open. Close the compact disc changer lid.

If the malfunction still exists, take your vehicle to your Toyota dealer.

4. “OFF” button

Push the “OFF” button to turn off the rear seat audio system.

REPLACING CONTROLLER BATTERY

For replacement, use a CR2025 lithium battery or equivalent.

⚠ CAUTION

Special care should be taken that small children do not swallow the removed battery or components.

NOTICE

- ***When replacing the battery, be careful not to lose the components.***
- ***Replace only with the same or equivalent type of battery recommended by a Toyota dealer.***
- ***Dispose of used batteries according to the local regulations.***

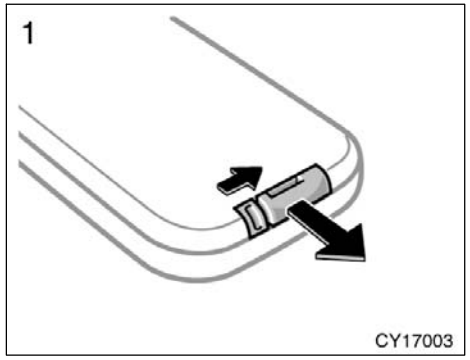

Replace the battery by using the following procedures:

1. Pull the case out while pushing the lock release button to the side.

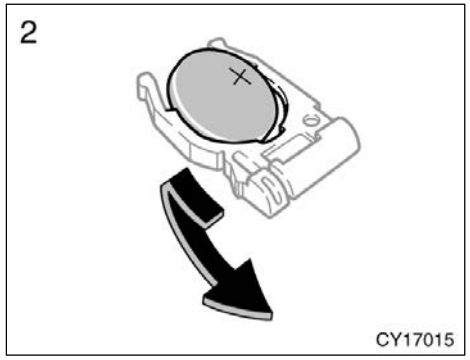

2. Remove the discharged battery.
3. Put a new battery with the positive (+) side up.

   Put in the case securely.

NOTICE

- ***Make sure that the positive side of the controller battery is facing correctly.***
- ***Do not replace the battery with wet hands. Water may cause rust.***
- ***Do not touch or move any components inside of the controller, or it may interfere with proper operation.***
- ***Be careful not to bend the electrode of the controller battery insertion and that dust or oil does not adhere to the transmitter case.***
- ***Close the battery case securely.***

After replacing the battery, check that the controller operates properly. If the controller still does not operate properly, contact your Toyota dealer.

Audio system operating hints

NOTICE

To ensure correct audio system operations:

- ***Be careful not to spill beverages over the audio system.***
- ***Do not put anything other than a cassette tape or compact disc into the slot.***
- ***The use of a cellular phone inside or near the vehicle may cause a noise from the speakers of the audio system. This does not indicate a malfunction.***

RADIO RECEPTION

Usually, a problem with radio reception does not mean there is a problem with your radio—it is just the normal result of conditions outside the vehicle.

For example, nearby buildings and terrain can interfere with FM reception. Power lines or telephone wires can interfere with AM signals. And of course, radio signals have a limited range. The farther you are from a station, the weaker its signal will be. In addition, reception conditions change constantly as your vehicle moves.

Here are some common reception problems that probably do not indicate a problem with your radio:

FM

Fading and drifting stations—Generally, the effective range of FM is about 40 km (25 miles). Once outside this range, you may notice fading and drifting, which increase with the distance from the radio transmitter. They are often accompanied by distortion.

Multi–path—FM signals are reflective, making it possible for two signals to reach your antenna at the same time. If this happens, the signals will cancel each other out, causing a momentary flutter or loss of reception.

Static and fluttering—These occur when signals are blocked by buildings, trees, or other large objects. Increasing the bass level may reduce static and fluttering.

Station swapping—If the FM signal you are listening to is interrupted or weakened, and there is another strong station nearby on the FM band, your radio may tune in the second station until the original signal can be picked up again.

AM

Fading—AM broadcasts are reflected by the upper atmosphere—especially at night. These reflected signals can interfere with those received directly from the radio station, causing the radio station to sound alternately strong and weak.

Station interference—When a reflected signal and a signal received directly from a radio station are very nearly the same frequency, they can interfere with each other, making it difficult to hear the broadcast.

Static—AM is easily affected by external sources of electrical noise, such as high tension power lines, lightening, or electrical motors. This results in static.

CARING FOR YOUR CASSETTE PLAYER AND TAPES

For the best performance for your cassette player and tapes:

Clean the tape head and other parts regularly.

- A dirty tape head or tape path can decrease sound quality and tangle your cassette tapes. The easiest way to clean them is by using a cleaning tape. (A wet type is recommended.)

Use high–quality cassettes.

- Low–quality cassette tapes can cause many problems, including poor sound, inconsistent playing speed, and constant auto–reversing. They can also get stuck or tangled in the cassette player.
- Do not use a cassette if it has been damaged or tangled or if its label is peeling off.
- Do not leave a cassette in the player if you are not listening to it, especially if it is hot outside.
- Store cassettes in their cases and out of direct sunlight.
- Avoid using cassettes with a total playing time longer than 100 minutes (50 minutes per side). The tape used in these cassettes is thin and could get stuck or tangled in the cassette player.

CARING FOR YOUR COMPACT DISC PLAYER AND DISCS

- Your compact disc player is intended for use with 12 cm (4.7 in.) discs only.
- Extremely high temperatures can keep your compact disc player from working. On hot days, use the air conditioning to cool the vehicle interior before you listen to a disc.
- Bumpy roads or other vibrations may cause your compact disc player to skip.
- If moisture gets into your compact disc player, you may not hear any sound even though your compact disc player appears to be working. Remove the disc from the player and wait until it dries.

⚠ CAUTION

Compact disc players use an invisible laser beam which could cause hazardous radiation exposure if directed outside the unit. Be sure to operate the player correctly.

- Use only compact discs marked as shown above. The following products may not be playable on your compact disc player.

  Copy–protected CD
  CD–R (CD–Recordable)
  CD–RW (CD–Re–writable)
  CD–ROM

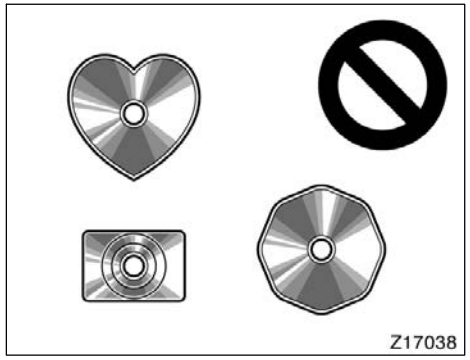

Special shaped discs

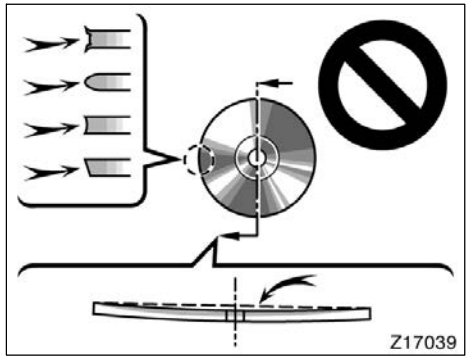

Low quality discs

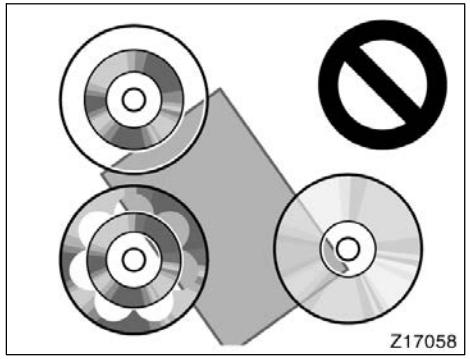

Transparent/translucent discs

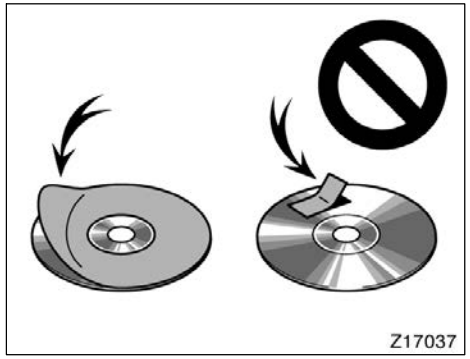

Labeled discs

NOTICE

Do not use special shaped, transparent/translucent, low quality or labeled discs such as those shown in the illustrations. The use of such discs may damage the player or changer, or it may be impossible to eject the disc.

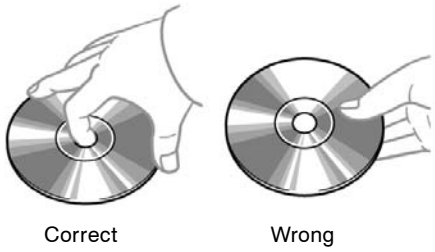

- Handle compact discs carefully, especially when you are inserting them. Hold them on the edge and do not bend them. Avoid getting fingerprints on them, particularly on the shiny side.
- Dirt, scratches, warping, pin holes, or other disc damage could cause the player to skip or to repeat a section of a track. (To see a pin hole, hold the disc up to the light.)
- Remove discs from the compact disc player when you are not listening to them. Store them in their plastic cases away from moisture, heat, and direct sunlight.

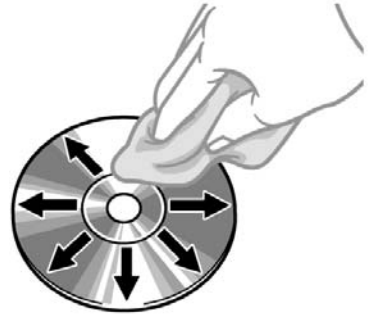

To clean a compact disc: Wipe it with a soft, lint–free cloth that has been dampened with water. Wipe in a straight line from the center to the edge of the disc (not in circles). Dry it with another soft, lint–free cloth. Do not use a conventional record cleaner or anti–static device.

SECTION 1–9

OPERATION OF INSTRUMENTS AND CONTROLS

Air conditioning system

Controls 230
Air flow selector settings 237
Operating tips 237
Instrument panel and rear vents 240
Air conditioning filter 241

Controls (without “DUAL” button)

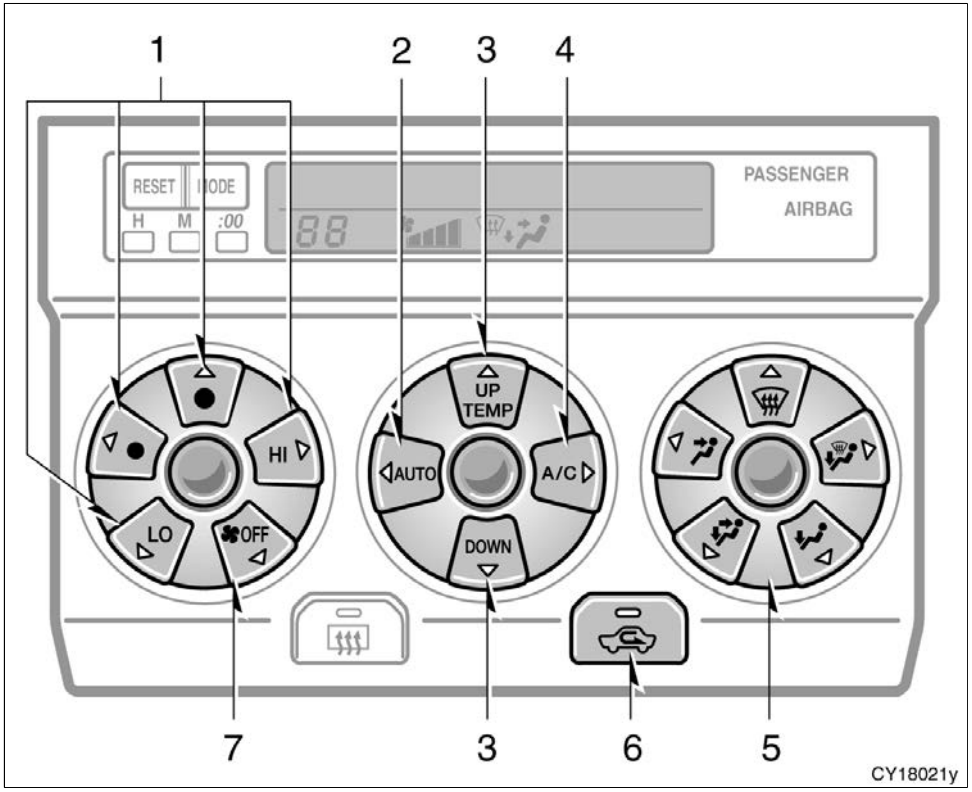

1. Fan speed selector
2. “AUTO” button
3. Temperature selector
4. “A/C” button
5. Air flow selector
6. Air intake selector
7. “OFF” button

“AUTO” button

For automatic operation of the air conditioning, push the “AUTO” button. An indicator light will illuminate to show that the automatic operation mode has been selected.

In the automatic operation mode, the air conditioning selects the most suitable fan speed, air flow, air intake and on–off of the air conditioning according to the temperature.

When you push the “AUTO” button with the air intake mode at FRESH, internal circulation may be applied for maximum cooling.

You may use manual controls if you want to select your own settings.

Fan speed selector

Select the mode button you desire to adjust the fan speed and push it. An indicator light will illuminate to show which fan speed mode is being selected.

In automatic operation, you do not have to adjust the fan speed unless you desire another fan speed mode.

Temperature selector

To increase the temperature, push the “UP” side, to decrease it, push the “DOWN” side.

“LO” appears when you adjust to maximum cooling, and “HI” appears when you adjust to maximum warming.

“OFF” button

Push the “OFF” button to turn off the air conditioning system.

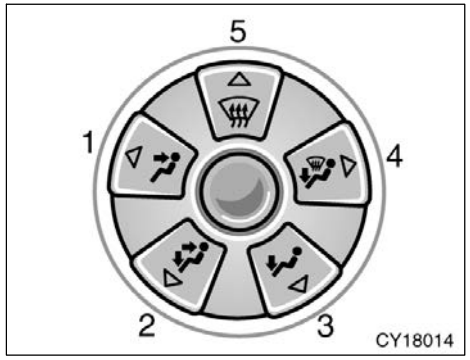

Air flow selector

Push one of the buttons to select the vents used for air flow. An indicator light will illuminate to show which air flow mode is being selected.

In automatic operation, you do not have to select the air flow unless you desire another air flow mode.

1. **Panel—**Air flows from the instrument panel vents and rear vents.
2. **Bi−level—**Air flows from both the floor vents, the instrument panel vents and rear vents.
3. **Floor—**Air flows mainly from the floor vents.

4. **Floor/Windshield—**Air flows mainly from the floor vents and windshield vents.
5. **Windshield—**Air flows mainly from the windshield vents.

   When this button is pressed, air flows mainly from the windshield vents and turns on the defogging function with the purpose of clearing the front view.

   Pressing this button once again returns the air flow mode to the last one used.

   This button allows the air intake to select FRESH automatically. This is to clean up the front view more quickly. If you want to return the setting to RECIRCULATE mode, press the air intake selector button once again.

   Press the “A/C” button for dehumidified heating or cooling. This setting clears the front view more quickly.

For details about air flow selector settings, see “Air flow selector settings” described below.

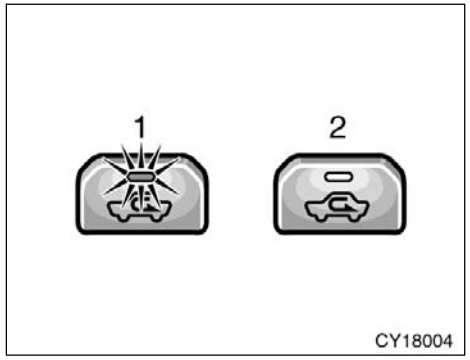

Air intake selector

Push the button to select the air source. An indicator light will illuminate to show which the air source is being selected.

1. **Recirculate—**Recirculates the air inside the vehicle.
2. **Fresh—**Draws outside air into the system.

To prevent fogging up of the windshield, the air intake mode may change automatically to FRESH depending on the condition of the air conditioning system.

“A/C” button

To turn on the air conditioning, push the “A/C” button. The “A/C” button indicator will come on. To turn the air conditioning off, push the button again.

If the “A/C” button indicator flashes, there is a problem in the air conditioning system and the air conditioning automatically shuts off. If this happens, take your vehicle to a Toyota dealer for service.

Controls (with “DUAL” button)

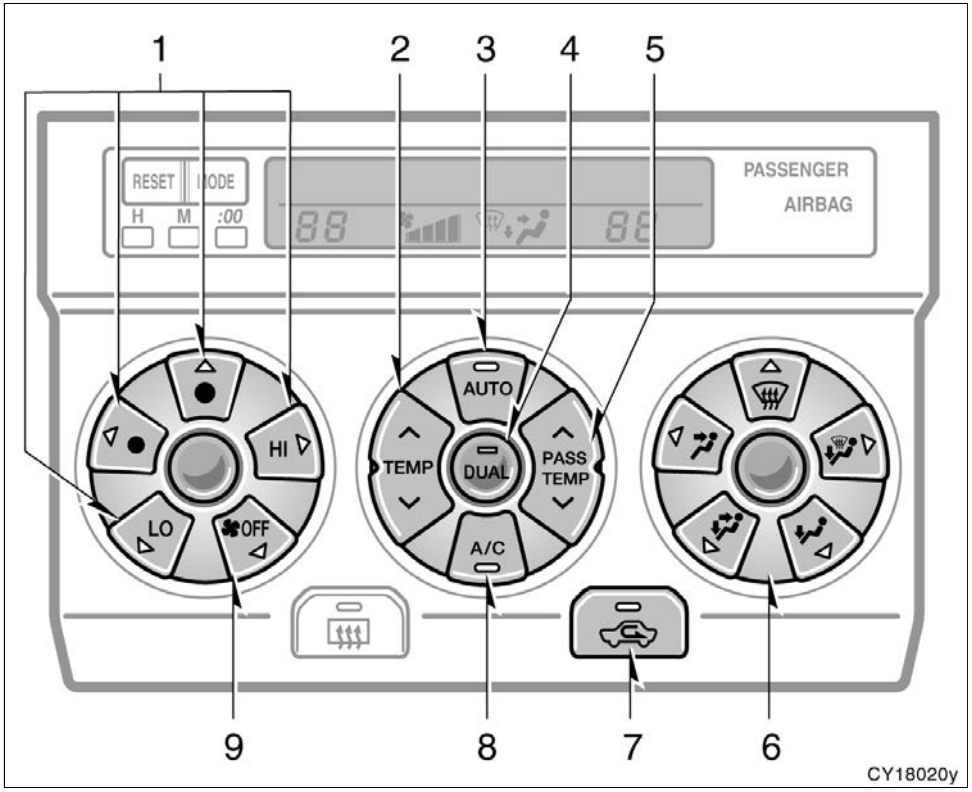

1. Fan speed selector
2. Temperature selector
   (at the independent mode: for driver)
   (at the linked mode: for driver and front passenger)
3. “AUTO” button
4. “DUAL” button
5. Temperature selector
   (for front passenger)
6. Air flow selector
7. Air intake selector
8. “A/C” button
9. “OFF” button

“AUTO” button

For automatic operation of the air conditioning, push the “AUTO” button. An indicator light will illuminate to show that the automatic operation mode has been selected.

In the automatic operation mode, the air conditioning selects the most suitable fan speed, air flow, air intake and on–off of the air conditioning according to the temperature.

When you push the “AUTO” button with the air intake mode at FRESH, internal circulation may be applied for maximum cooling.

You may use manual controls if you want to select your own settings.

Fan speed selector

Select the mode button you desire to adjust the fan speed and push it. An indicator light will illuminate to show which fan speed mode is being selected.

In automatic operation, you do not have to adjust the fan speed unless you desire another fan speed mode.

Temperature selector

To increase the temperature, push the “∧” side, to decrease it, push the “∨” side.

“LO” appears when you adjust to maximum cooling, and “HI” appears when you adjust to maximum warming.

“DUAL” button

This button is used to set the temperatures independently for the driver’s seat and front passenger seat.

Pushing the button changes the mode from independent and linked.

Independent mode: Temperatures can be set independently for the driver’s seat and front passenger’s seat. An indicator light will illuminated to show that the independent mode has been selected.

Linked mode: The same temperature is set for the driver’s seat and front passenger’s seat.

When the temperature for the front passenger’s seat is changed in linked mode, the mode is changed automatically to independent mode.

“OFF” button

Push the “OFF” button to turn off the air conditioning system.

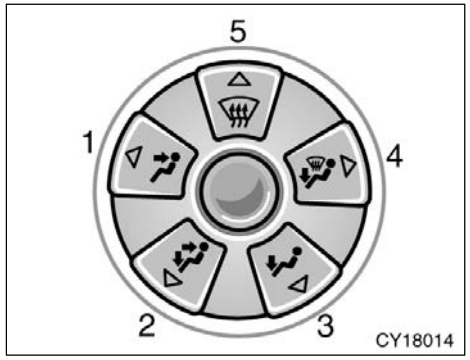

Air flow selector

Push one of the buttons to select the vents used for air flow. An indicator light will illuminate to show which air flow mode is being selected.

In automatic operation, you do not have to select the air flow unless you desire another air flow mode.

1. **Panel—**Air flows from the instrument panel vents and rear vents.
2. **Bi−level—**Air flows from both the floor vents, the instrument panel vents and rear vents.
3. **Floor—**Air flows mainly from the floor vents.
4. **Floor/Windshield—**Air flows mainly from the floor vents and windshield vents.
5. **Windshield—**Air flows mainly from the windshield vents.

   When this button is pressed, air flows mainly from the windshield vents and turns on the defogging function with the purpose of clearing the front view.

   Pressing this button once again returns the air flow mode to the last one used.

   This button allows the air intake to select FRESH automatically. This is to clean up the front view more quickly. If you want to return the setting to RECIRCULATE mode, press the air intake selector button once again.

   Press the “A/C” button for dehumidified heating or cooling. This setting clears the front view more quickly.

For details about air flow selector settings, see “Air flow selector settings” described below.

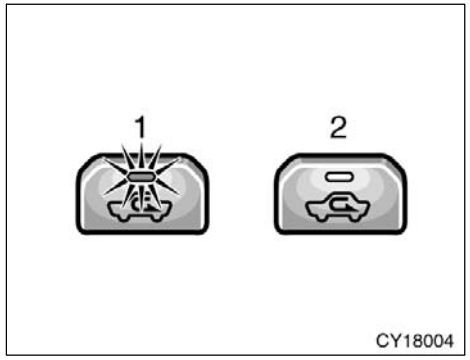

Air intake selector

Push the button to select the air source. An indicator light will illuminate to show which the air source is being selected.

1. **Recirculate—**Recirculates the air inside the vehicle.
2. **Fresh—**Draws outside air into the system.

To prevent fogging up of the windshield, the air intake mode may change automatically to FRESH depending on the condition of the air conditioning system.

“A/C” button

To turn on the air conditioning, push the “A/C” button. The “A/C” button indicator will come on. To turn the air conditioning off, push the button again.

If the “A/C” button indicator flashes, there is a problem in the air conditioning system and the air conditioning automatically shuts off. If this happens, take your vehicle to your Toyota dealer for service.

Air flow selector settings

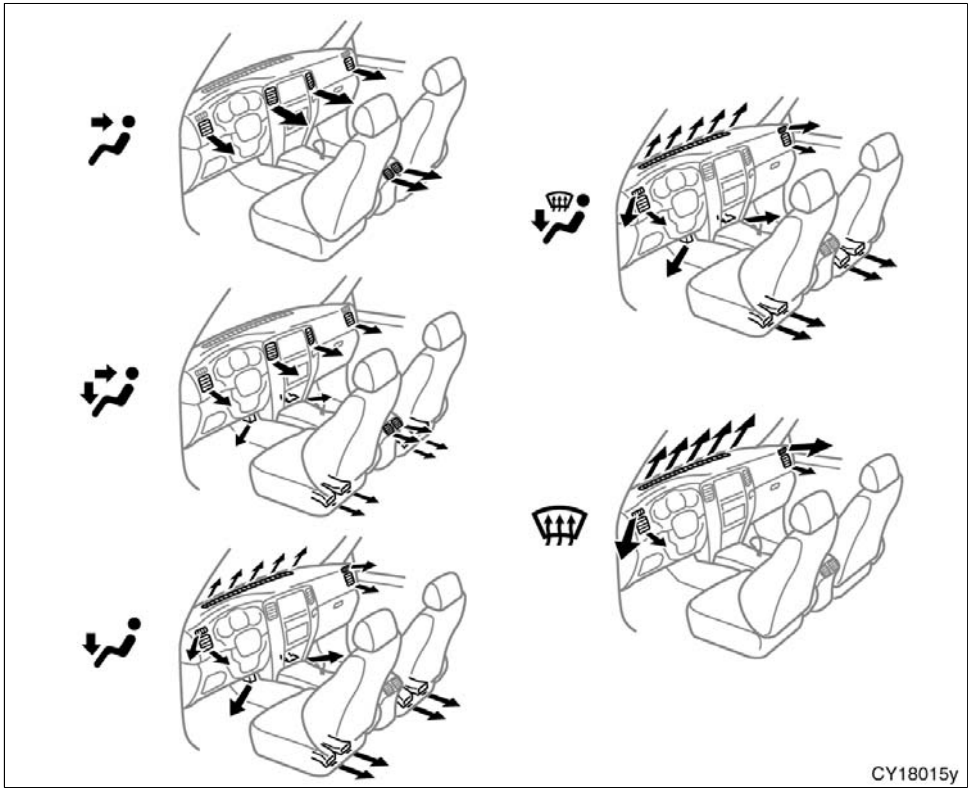

Operating tips

- To cool off your Toyota after it has been parked in the hot sun, drive with the windows open for a few minutes. This vents the hot air, allowing the air conditioning to cool the interior more quickly.
- Make sure the air intake grilles in front of the windshield are not blocked (by leaves or snow, for example).
- On humid days, do not blow cold air on the windshield. The windshield could fog up because of the difference in air temperature on the inside and outside of the windshield.
- Keep the area under the front seats clear to allow air to circulate throughout the vehicle.
- On cold days, set the fan speed to high for a minute to help clear the intake ducts of snow or moisture. This can reduce the amount of fogging on the windows.
- When driving on dusty roads, close all windows. If dust thrown up by the vehicle is still drawn into the vehicle after closing the windows, it is recommended that the air intake selector be set to FRESH and the fan speed selector to any setting.

- If following another vehicle on a dusty road, or driving in windy and dusty conditions, it is recommended that the air intake selector be temporarily set to RECIRCULATE, which will close off the outside passage and prevent outside air and dust from entering the vehicle interior.

Heating

For best results, set controls as follows:

For automatic operation—

Press in the “AUTO” button.
Temperature—To the desired temperature
Air intake—FRESH (outside air)
Air conditioning—OFF

For manual operation—

Fan speed—To the desired fan speed
Temperature—Towards **WARM**
Air intake—FRESH (outside air)
Air flow—FLOOR
Air conditioning—OFF

- For quick heating, select recirculated air for a few minutes. To keep the windows from fogging, select fresh after the vehicle interior has been warmed.
- Press the “A/C” button on for dehumidified heating.
- Choose floor/windshield air flow to heat the vehicle interior while defrosting or defogging the windshield.

Air conditioning

For best results, set controls as follows:

For automatic operation—

Press in the “AUTO” button.
Temperature—To the desired temperature
Air intake—FRESH (outside air)
Air conditioning—ON

For manual operation—

Fan speed—To the desired fan speed
Temperature—Towards **COLD**
Air intake—FRESH (outside air)
Air flow—PANEL
Air conditioning—ON

- For quick cooling, select recirculated air for a few minutes.

Ventilation

For best results, set controls as follows:

For automatic operation—

Press in the “AUTO” button.
Temperature—Towards low temperature
Air intake—FRESH (outside air)
Air conditioning—OFF

For manual operation—

Fan speed—To the desired fan speed
Temperature—Towards **COLD**
Air intake—FRESH (outside air)
Air flow—PANEL
Air conditioning—OFF

Defogging and defrosting

—The inside of the windshield

For best results, set controls as follows:

—For automatic operation

Temperature—Towards high temperature to heat; low temperature to cool
Air intake—FRESH (outside air)
Air flow—WINDSHIELD

—For manual operation

Fan speed—To the desired fan speed
Temperature—Towards high temperature to heat; low temperature to cool
Air intake—FRESH (outside air)
Air flow—WINDSHIELD

Pressing the windshield air flow button turns on the defogging function with the purpose of clearing the front view.

When pressing the windshield air flow button, the air intake selects FRESH automatically. This is to clean up the front view more quickly.

If you want to return the setting to RECIRCULATE mode, press the air intake selector button once again.

Press the “A/C” button for dehumidified heating or cooling. This setting clears the front view more quickly.

- On humid days, do not blow cold air on the windshield—the difference between the outside and inside temperatures could make the fogging worse.

—The outside of the windshield

For best results, set controls as follows:

—For automatic operation

Temperature—Towards high temperature
Air intake—FRESH (outside air)
Air flow—WINDSHIELD

—For manual operation

Fan speed—To the desired fan speed
Temperature—Towards high temperature
Air intake—FRESH (outside air)
Air flow—WINDSHIELD

Pressing the windshield air flow button turns on the defogging function with the purpose of clearing the front view.

When pressing the windshield air flow button, the air intake selects FRESH automatically. This is to clean up the front view more quickly.

If you want to return the setting to RECIRCULATE mode, press the air intake selector button once again.

Press the “A/C” button for dehumidified heating or cooling. This setting clears the front view more quickly.

- To heat the vehicle interior while defrosting the windshield, choose floor/windshield air flow.

Instrument panel and rear vents

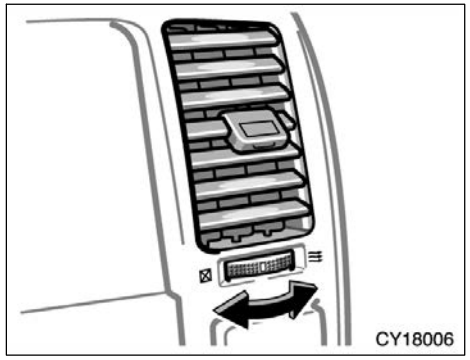

Center vents

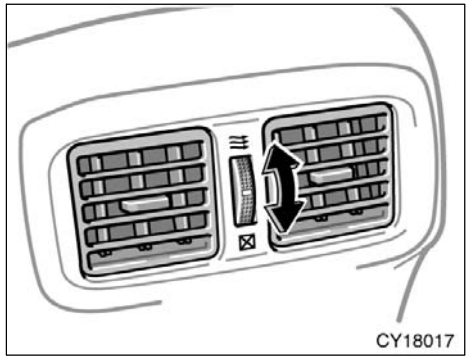

Rear vents

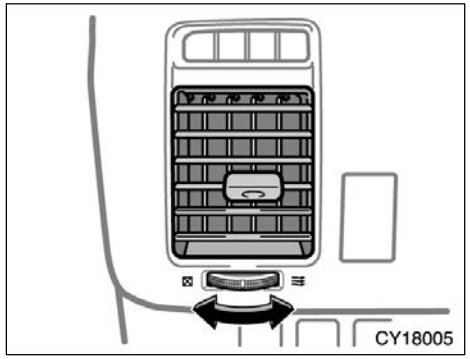

Side vents

If air flow control is not satisfactory, check the instrument panel and rear vents. The instrument panel and rear vents may be opened or closed as shown.

Air conditioning filter—

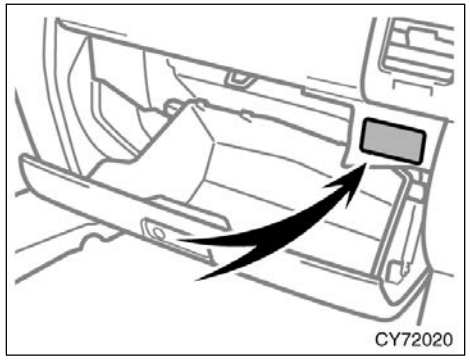

The air conditioning filter information label is placed on the upper right side of the glove box as shown and indicates that a filter has been installed.

The air conditioning filter prevents dust from entering the vehicle through the air conditioning vent.

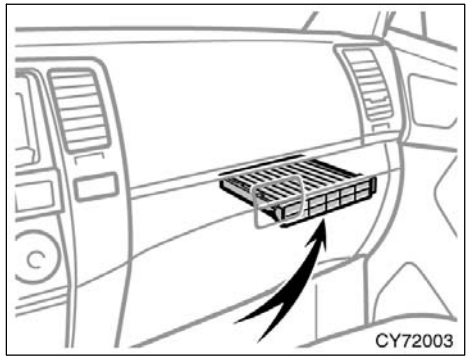

The air conditioning filter is behind the glove box.

—Checking and replacing the air conditioning filter

The air conditioning filter may clog after long use. The filter may need to be replaced if the air flow of the air conditioning and heater experiences extreme reductions in operating efficiency, or if the windows begin to fog up easily.

To maintain the air conditioning efficiency, inspect and replace the air conditioning filter according to the maintenance schedule. In dusty areas or areas with heavy traffic flow, such as inner city or desert areas, early replacement may be required. (For scheduled maintenance information, please refer to the “Scheduled Maintenance Guide” or “Owner’s Manual Supplement”.)

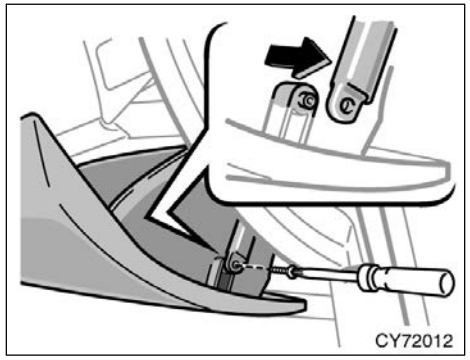

1. Open the glove box. Remove the screw with a Phillips−head screwdriver and slide the hook as shown.

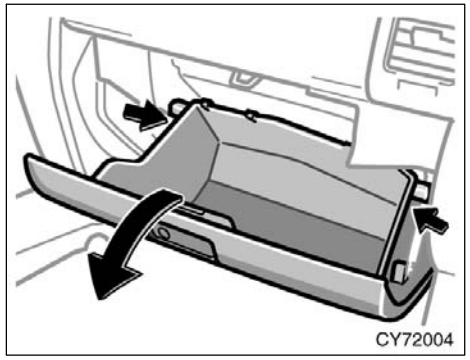

2. Push in each side of the glove box to disconnect the claws.

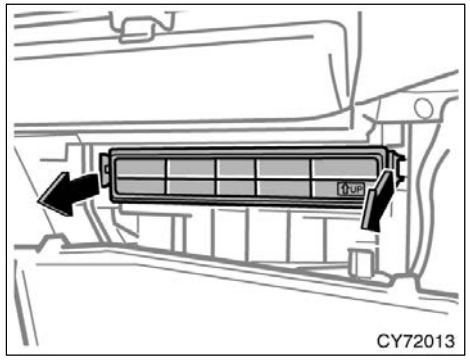

3. Remove the filter case by holding both sides.

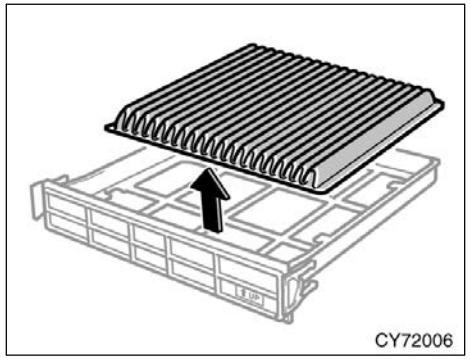

4. **Remove the filter from the filter case.**
5. **Inspect the filter on the surface.**

If it is the just moderately dusty, it may be cleaned by blowing compressed air from the reverse surface. Do not wash or oil the filter.

If it is dirty, it should be replaced.

When setting the filter to the filter case, ensure that the flat side of the filter is down and the ribbed side is up.

Position the filter case so that the “↑UP” mark is pointing up and install it in the vehicle.

INFORMATION

The air filter should be installed properly in position. The use of air conditioning with the air filter removed may cause deteriorated dustproof performance and then affect air conditioning performance.

SECTION 1–10

OPERATION OF INSTRUMENTS AND CONTROLS

Other equipment

Multi–information display 246
Compass 249
Rear view monitor system 254
Power outlet 258
Glove box 260
Garage door opener 261
Auxiliary boxes 265
Rear console box 267
Tissue box holder 268
Coin holder 268
Trash holder 269
Front cup holders 270
Rear cup holders and tray 271
Rear cup holders 272
Bottle holders 273
Tie–down hooks 274
Grocery bag hooks 274
Cargo net hooks 274
Luggage cover 275
Double deck 276
Roof luggage carrier 277
Floor mat 278

Multi−information display—

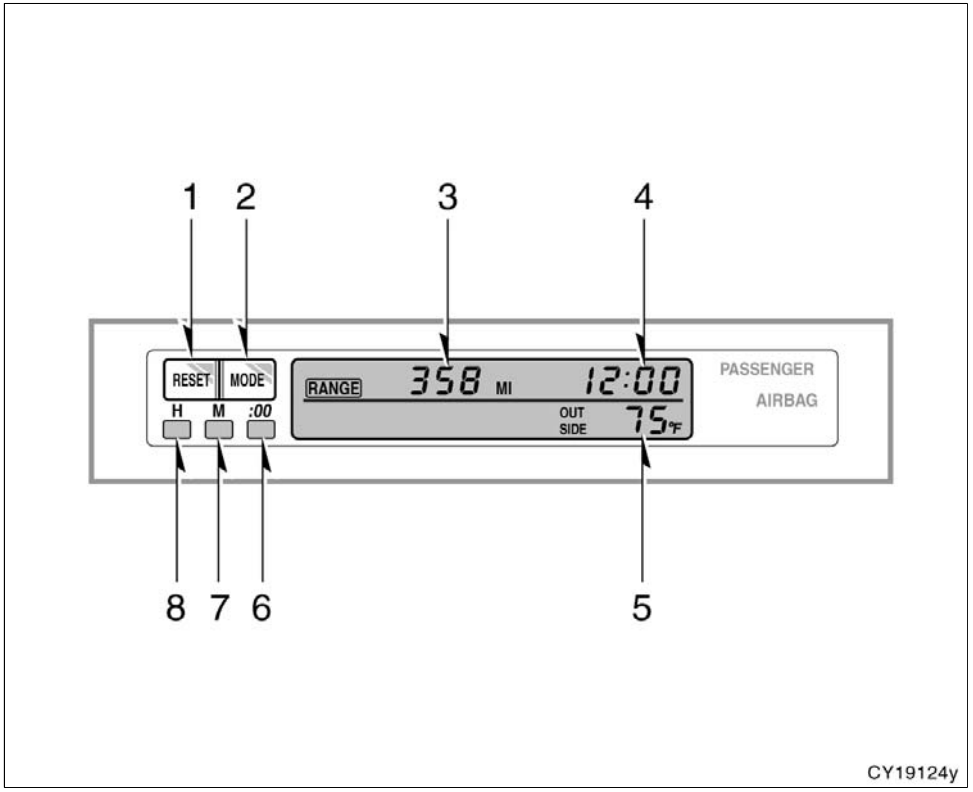

1. “RESET” button
2. “MODE” button
3. Air conditioning system without “DUAL” button—Cruise information display

   Air conditioning system with “DUAL” button—Outside temperature and cruise information display
4. Clock
5. Air conditioning system without “DUAL” button only—Outside temperature display
6. “:00” button
7. “M” button
8. “H” button

—Before using the multi–information display

Operate the multi–information display with the ignition switch on.

When the ignition switch is turned to “ON”, the last previously used mode displayed just before the ignition switch is turned off will appear.

If the electrical power source has been disconnected from the multi–information display, the display will automatically be set to the initial mode.

⚠ CAUTION

Do not adjust the display while the vehicle is moving. Be sure to adjust the display only when the vehicle is stopped.

—Clock

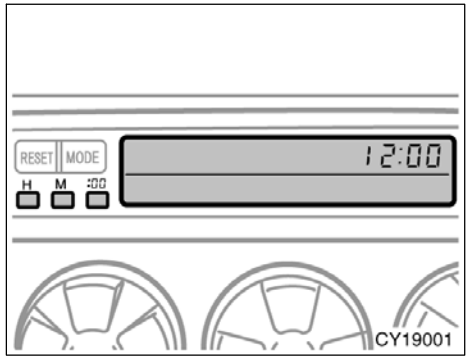

To reset the hour: Push the “H” button.
To reset the minutes: Push the “M” button.

If quick adjustment to a full hour is desired, push the “:00” button.

For example, if the “:00” button is depressed when the time is between 1:01—1:29, the time will change to 1:00. If the time is between 1:30—1:59, the time will change to 2:00.

The key must be in the “ACC” or “ON” position.

If the electrical power source has been disconnected from the clock, the time display will automatically be set to 1:00 (one o’clock).

—Outside temperature display (air conditioning system without “DUAL” button)

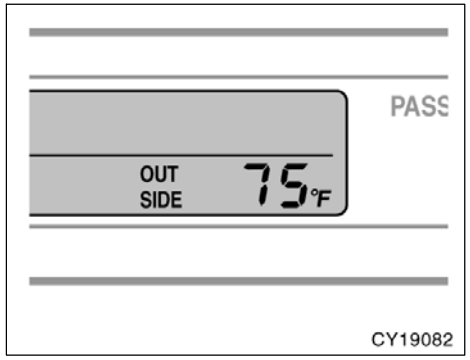

The displayed temperature ranges from –30°C (–22°F) up to 50°C (122°F).

The key must be in the “ON” position.

If an abnormality exists in the connection of the outside air temperature sensor, “––°C” (“––°F”) will appear on the display. If “––°C” (“––°F”) appears on the display, contact your Toyota dealer.

There may be a case that “––°C” (“––°F”) appears momentarily when the ignition is quickly turned to “ON”. It is normal if it goes out soon.

—Cruise information display

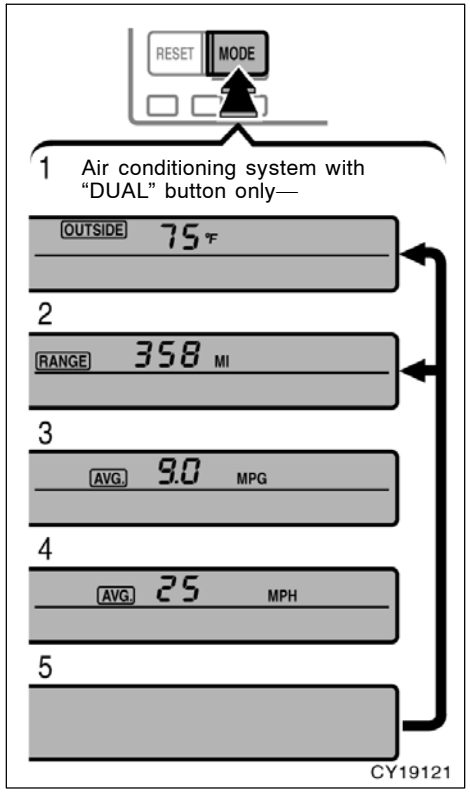

The outside temperature display (air conditioning system with “DUAL” button) and cruise information display indicates the following information.

Every time you push the “MODE” button, the display toggles through this information.

1. Outside temperature
2. Driving range
3. Average fuel consumption
4. Average vehicle speed
5. Display off

The displayed values in the cruise information display indicate general driving conditions. Accuracy varies with driving habits and road conditions.

1. Outside temperature (“OUTSIDE °C” or “OUTSIDE °F”)

The displayed value is updated every 1 second.

The displayed temperature ranges from –30°C (–22°F) up to 50°C (122°F).

If an abnormality exists in the connection of the outside air temperature sensor, “––°C” (“––°F”) will appear on the display. If “––°C” (“––°F”) appears on the display, contact your Toyota dealer.

There may be a case that “––°C” (“––°F”) appears momentarily when the ignition is quickly turned to “ON”. It is normal if it goes out soon.

2. Driving range (“RANGE MI” or “RANGE km”)

The distance the vehicle can travel with the remaining fuel is calculated and displayed based on the quantity of remaining fuel and past fuel consumption.

The driving range display indicates the approximate distance that you can drive until the fuel gauge reaches “E”. It is different from the actual distance traveled.

The displayed value is updated about every 10 seconds.

Every time you refuel the vehicle, the calculation is reset.

The actual driving range varies with driving habits and road conditions. If fuel consumption is good, the driving range will be longer than indicated. If fuel consumption is poor, the driving range will be shorter than indicated.

If the low fuel level warning light comes on, refuel the vehicle even if the display indicates that the vehicle can be driven further.

3. Average fuel consumption (“AVG. MPG” or “AVG. L/100 km”)

Average fuel consumption is calculated and displayed based on total driving distance and total fuel consumption with the engine running.

The displayed value is updated about every 10 seconds.

To reset the calculation, push the “RESET” button about 1 second.

4. Average vehicle speed (“AVG. MPH” or “AVG. km/h”)

Average vehicle speed is calculated and displayed based on total driving distance and total driving time with the engine running.

The displayed value is updated about every 10 seconds.

To reset the calculation, push the “RESET” button about 1 second.

Compass

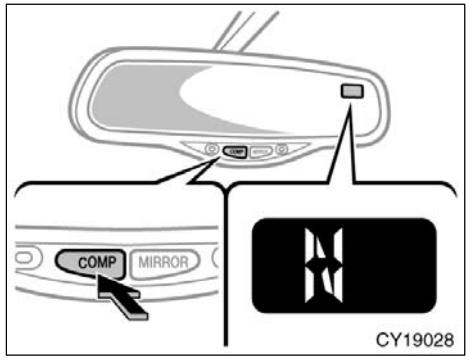

The direction is indicated on the inside rear view mirror.

If the ignition switch was turned off with the system on, the system will automatically turn back on when the ignition switch is turned on.

Push the “COMP” switch to turn the compass system on and off.

The compass indicates the direction that the vehicle is heading. In the above case, it shows that the vehicle is heading north.

Displays	Directions
N	North
NE	Northeast
E	East
SE	Southeast
S	South
SW	Southwest
W	West
NW	Northwest

The compass may not show the correct direction in the following conditions:

- The vehicle is stopped immediately after turning.
- The compass does not adjust while the vehicle is stopped.
- The ignition switch is turned off immediately after turning.
- The vehicle is on an inclined surface.
- The vehicle is in a place where the earth’s magnetic field is subject to interference by artificial magnetic fields (underground parking, under a steel tower, between buildings, roof parking, near a crossing, near a large vehicle, etc.).
- The vehicle is magnetized. (There is a magnet or a metal object on or near the inside rear view mirror.)
- The battery has been disconnected.

If your vehicle is out of the set zone, refer to “CALIBRATING THE COMPASS” below to set the zone number.

If the deviation is small, the compass works to calibrate the direction automatically while the vehicle is in motion.

For additional precision or for complete calibrating, see “CALIBRATING THE COMPASS” below.

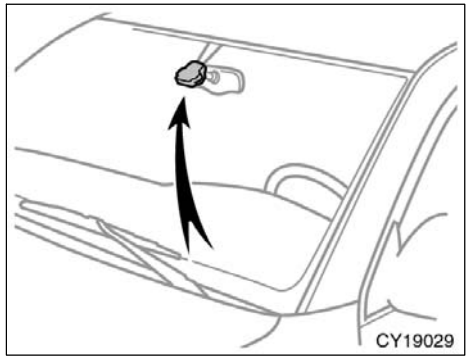

Compass sensor

The compass sensor is on the windshield.

NOTICE

Do not put magnets or a metal object on or near the inside rear view mirror of the vehicle. Doing this may cause malfunction of the compass sensor.

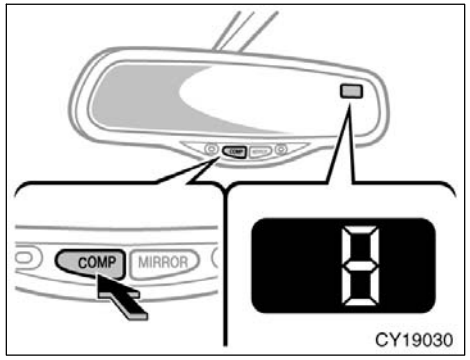

CALIBRATING THE COMPASS (deviation calibration)

The direction display on the compass deviates from the true direction determined by the earth’s magnetic field. The angle of deviation varies according to the geographic position of the vehicle.

To adjust this deviation, stop the vehicle, then push and hold the “COMP” switch until the zone number appears on the display. Then push the “COMP” switch, referring to the following map to select the number of the zone where the vehicle is.

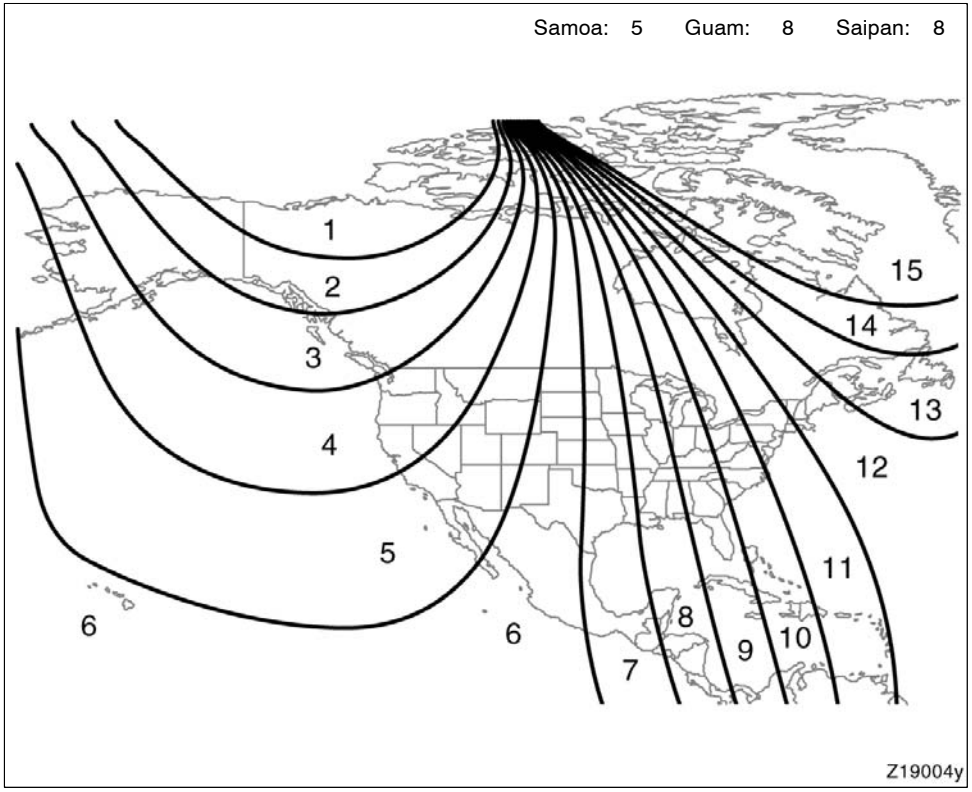

Zone number

After calibration, leaving the system for several seconds returns it to the compass mode.

⚠ CAUTION

Do not adjust the display while the vehicle is moving. Be sure to adjust the display only when the vehicle is stopped.

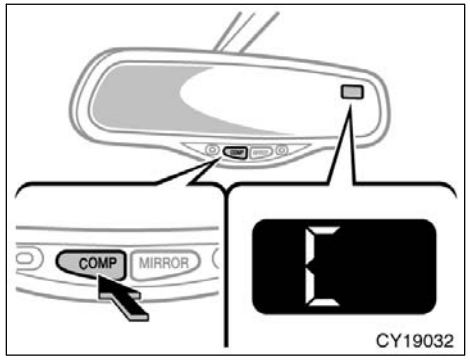

CALIBRATING THE COMPASS (circling calibration)

Sometimes the direction display on the compass may not change after a turn. To rectify this, stop the vehicle and push and hold the “COMP” switch until “C” appears on the display.

If “C” appears on the display because of a drastic change in the magnetic field, perform circling calibration.

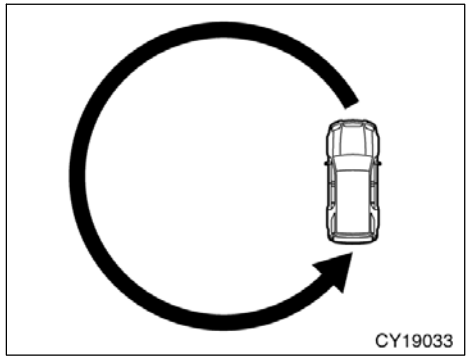

Drive the vehicle in a circle at 8 km/h (5 mph) or less. If there is not enough space to drive in a circle, drive around the block.

After driving 1 to 3 circles in the above method, calibration is completed when the direction is shown on the display.

If calibration cannot be performed because of the magnetized vehicle etc., take your vehicle to Toyota dealer.

Perform circling calibration just after you have purchased your Toyota. And then always perform circling calibration after the battery has been removed, replaced or disconnected.

- Do not perform circling calibration of the compass in a place where the earth’s magnetic field is subject to interference by artificial magnetic fields (underground parking, under a steel tower, between buildings, roof parking, near a crossing, near a large vehicle, etc.).
- During calibration, do not operate electric systems (moon roof, power windows, etc.) as they may interfere with the calibration.

CAUTION

- **When doing the circling calibration, be sure to secure a wide space, and watch out for people and vehicles in the neighborhood. Do not violate any local traffic rules while performing circling calibration.**
- **Do not adjust the display while the vehicle is moving. Be sure to adjust the display only when the vehicle is stopped.**

Rear view monitor system

The rear view monitor system assists the driver by displaying images of the rear of the vehicle during backing up. The displayed image on the screen is a horizontally reversed mirror image of the inside rear view mirror.

To display the rear view on the screen, place the selector lever in the “R” position when the ignition switch in the “ON” position.

If you move the selector lever out of the “R” position, the screen returns to the previous screen. Operating another function of the navigation system will display another screen.

The rear view monitor system is an auxiliary device intended to back up. When backing up, be sure to check behind and all around the vehicle visually.

CAUTION

- **Do not rely entirely on the rear view monitor system.**

  Use caution just as you would when backing up any vehicle.

- **Never back up while looking only at the screen. The image on the screen may differ from actual conditions. If you back up while looking only at the screen, you may hit a vehicle or have an unexpected accident. When backing up, be sure to check behind and all around the vehicle visually and with mirrors before proceeding.**

NOTICE

- ***Do not use the system when the back door is not completely closed.***
- ***If the back of the vehicle is hit, the position and mounting angle of the camera may slip. Be sure to have the camera’s position and mounting angle checked at your Toyota dealer.***
- ***If the temperature changes rapidly, such as when hot water is poured on it in cold weather, the system may not operate normally.***

◆*If the camera lens becomes dirty, it cannot transmit a clear image. If water droplets, snow, or mud adhere to the lens, rinse with water and wipe with a soft cloth. If the lens is extremely dirty, wash with a mild cleanser and rinse.*

◆*Use your own eyes to assure safety as the displayed image may become darker and moving images may be slightly distorted when the display is cold.*

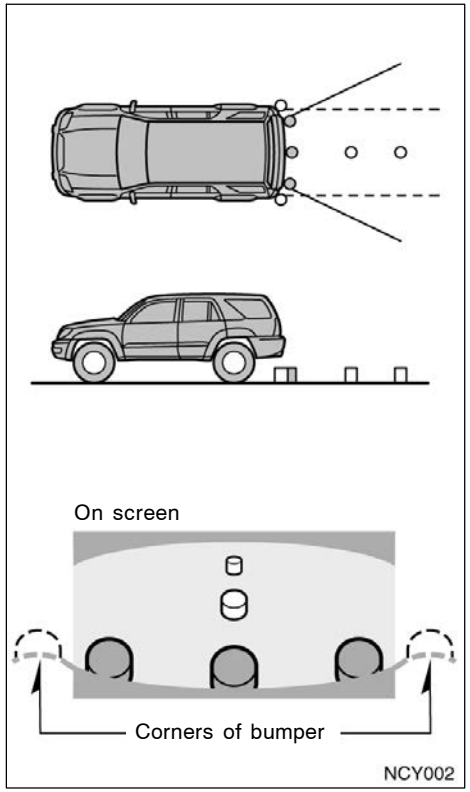

AREA DISPLAYED ON SCREEN

Image is displayed approximately level on screen.

- **The area detected by the camera is limited. The camera does not detect objects which are close to either corner of the bumper or under the bumper.**

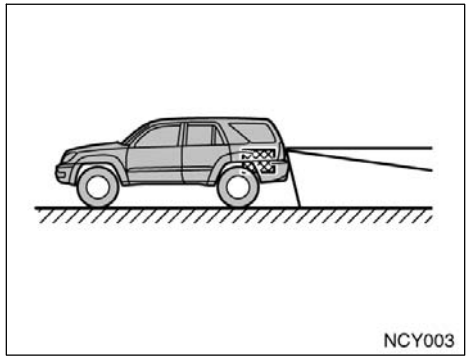

- **The area displayed on the screen may vary according to vehicle status or road conditions.**

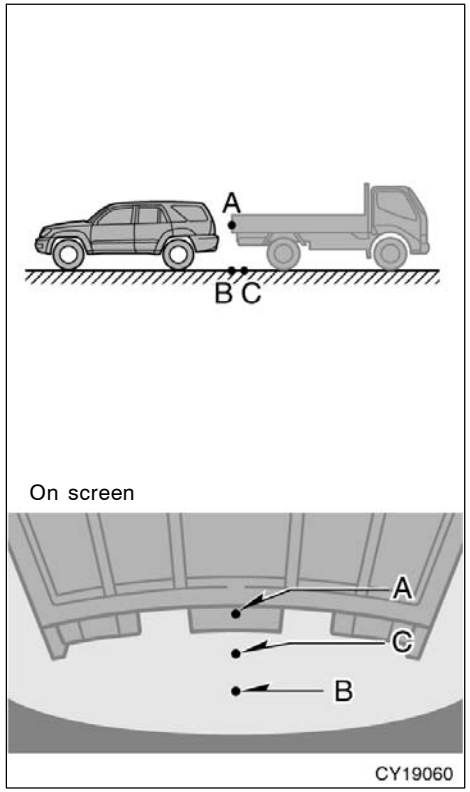

The distance that appears on the screen between three−dimensional objects (such as vehicles) and flat surfaces (such as the road) and the actual distance differ as follows.

In reality, A=B<C (A and B are equally far away; C is farther than A and B). However, on the screen, the situation appears to be B<C<A. In reality if you back up to point B, you will hit the truck.

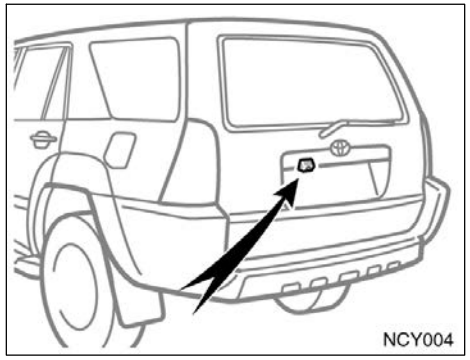

THE REAR VIEW MONITOR SYSTEM CAMERA

- The rear view monitor system camera is located on the back door as shown in the illustration.
- The rear view monitor system camera uses a special lens. The distance of the images that appear on the screen differs from the actual distance.
- In the following cases, it may become difficult to see the images on the screen, but this is not a malfunction.

  In the dark (for example, at night)

  When the temperature near the lens is high or low

  When water droplets are adhering to the camera, or when humidity is high (for example, when it rains)

  When foreign matter (for example, mud) is adhering to the camera

  When the sun or the beam of headlights is shining directly into the camera lens

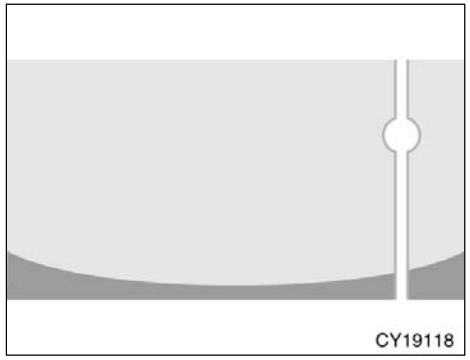

- If a bright light (for example, sunlight reflected off the vehicle body) is picked up by the camera, the smear effect* peculiar to the CCD camera may occur.

*: Smear effect—A phenomenon that occurs when a bright light (for example, sunlight reflected off the vehicle body) is picked up by the camera; when transmitted by the camera, the light source appears to have a vertical streak above and below it.

Power outlet (12 VDC)

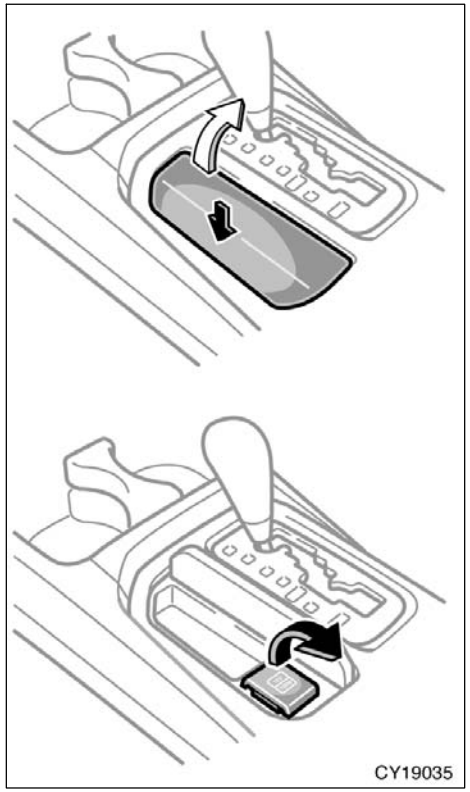

Rear console box

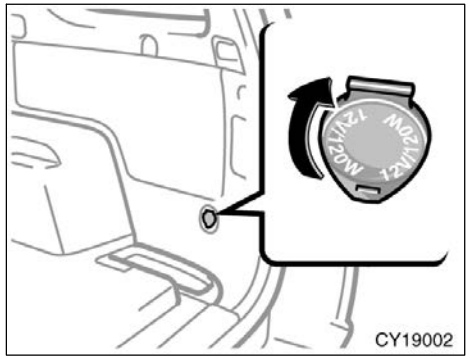

Luggage compartment

The power outlets are designed for power supply for car accessories.

In the rear console box—To use the power outlet, push the lid of the auxiliary box to open.

The key must be in the “ACC” or “ON” position for the power outlet to be used.

NOTICE

- ***To prevent the fuse from being blown, do not use the electricity over the total vehicle capacity of 12 VDC/120W.***
- ***To prevent the battery from being discharged, do not use the power outlets longer than necessary when the engine is not running.***
- ***Close the power outlet lids when the power outlets are not in use. Inserting anything other than an appropriate plug that fits the outlet, or allowing any liquid to get into the outlet may cause electrical failure or short circuits.***

Power outlet (115 VAC)

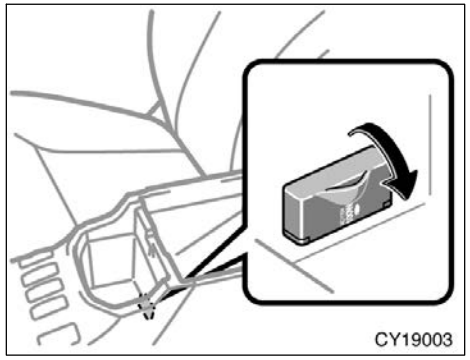

This power outlet is designed for use as a power supply for electric appliances in the vehicle.

The key must be in the “ON” position for the power outlet to be used.

The maximum capacity for this power outlet is 115 VAC/100W. If you attempt to use an appliance that requires more than 115 VAC or 100W, the protection circuit will activate and cut the power supply. The power supply will restart automatically when you use an appliance that operates within the 115 VAC/100W limits.

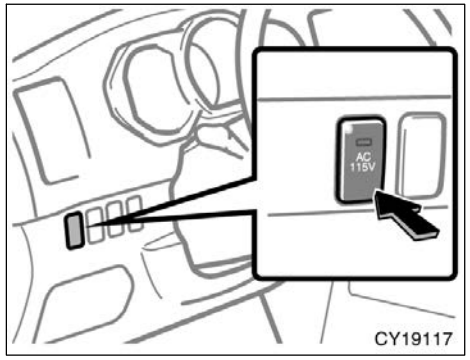

To use the power outlet, push the main switch on the instrument panel.

An indicator light will illuminate to indicate that the power outlet is ready for use.

Push the main switch once again to turn the power outlet off. When the power outlet is not in use, make sure that the main switch is turned off.

NOTICE

- ***To prevent the battery from being discharged, do not use the power outlet longer than necessary when the engine is not running.***
- ***Close the power outlet lid when the power outlet is not in use. Inserting anything other than an appropriate plug that fits the outlet may cause electrical failure or short circuits.***

The power outlet is not designed for the following electric appliances even though their power consumption is under 115 VAC/100W. These appliances may not operate properly.

- Appliances with high initial peak wattage: cathode–ray tube type televisions, compressor–driven refrigerators, electric pumps, electric tools, etc.
- Measuring devices which process precise data: medical equipment, measuring instruments, etc.
- Other appliances requiring an extremely stable power supply: microcomputer–controlled electric blankets, touch sensor lamps, etc.

Certain electrical appliances may cause radio noise.

Glove box

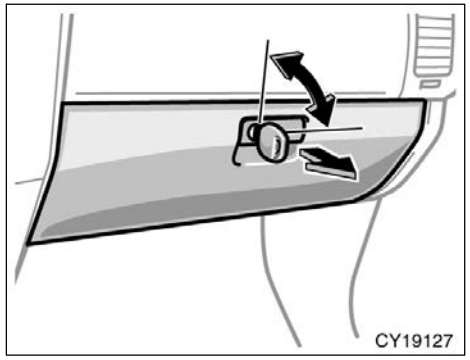

To use the glove box:

Open by pulling the lever.

Lock by inserting the master key and turning it clockwise.

Unlock by inserting the master key and turning it counterclockwise.

With the instrument panel lights on, the glove box light will come on.

⚠ CAUTION

To reduce the chance of injury in case of an accident or a sudden stop, always keep the glove box door closed while driving.

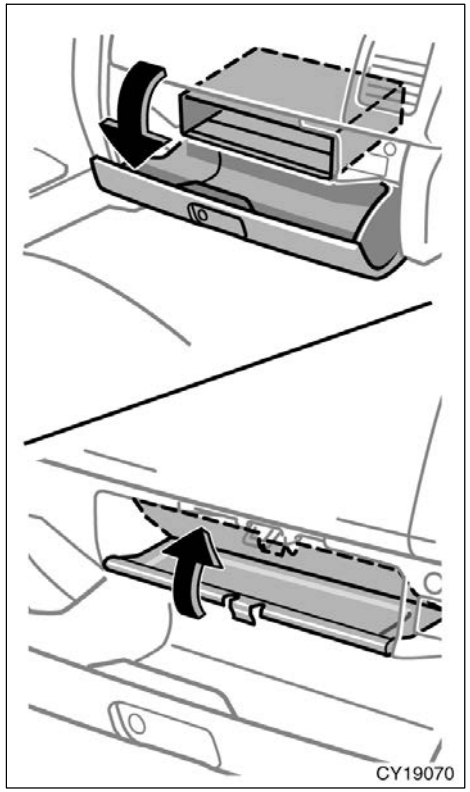

On some models, an auxiliary box is located inside the glove box.

To increase the capacity of the glove box, raise the lower panel of the auxiliary box.

Garage door opener

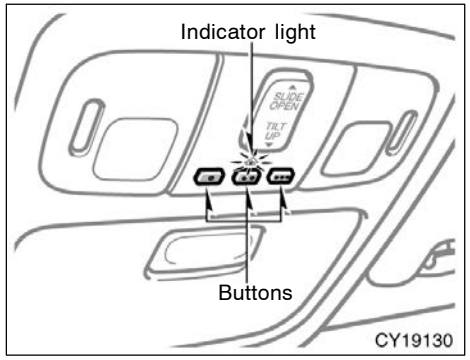

The garage door opener (HomeLink® Universal Transceiver) is manufactured under license from HomeLink® and can be programmed to operate garage doors, gates, entry doors, door locks, home lighting systems, and security systems, etc.

(a) Programming the HomeLink®

The HomeLink® in your vehicle has 3 buttons and you can store one program for each button.

To ensure correct programming into the HomeLink®, install a new battery in the hand–held transmitter prior to programming.

The battery side of the hand–held transmitter must be pointed away from the HomeLink® during the programming process.

For Canadian users, follow the procedure in “Programming an entrance gate/programming all devices in the Canadian market”.

1. Decide which of 3 HomeLink® buttons you want to program.

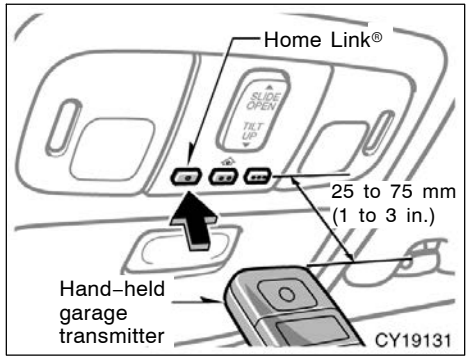

2. Place your hand–held garage transmitter 25 to 75 mm (1 to 3 in.) away from the surface of the HomeLink®.

Keep the indicator light on the HomeLink® in view while programming.

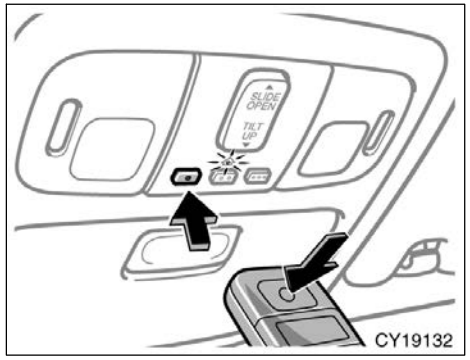

3. Simultaneously press and hold the hand–held garage transmitter button along with the selected HomeLink® button.

Do not release the buttons until step 4 has been completed.

4. When the indicator light on the HomeLink® changes from a slow to a rapid flash after 20 seconds, you can release both buttons.

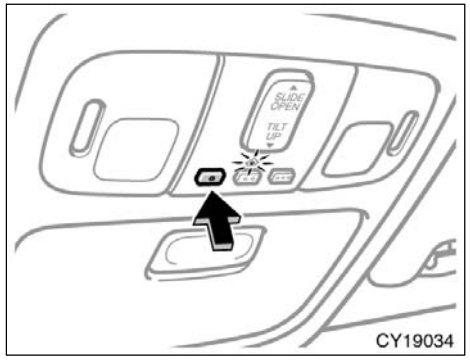

5. Test the operation of the HomeLink® by pressing the newly programmed button. If programming a garage door opener, check to see if the garage door opens and closes.

If the garage door does not operate, identify if your garage transmitter is of the “Rolling Code” type. Press and hold the programmed HomeLink® button. The garage door has the rolling code feature if the indicator light (on the HomeLink®) flashes rapidly and then remains lit after 2 seconds. If your garage transmitter is the “Rolling Code” type, proceed to the heading “Programming a rolling code system”.

6. Repeat steps 2 through 5 for each remaining HomeLink® button to program another device.

Programming a rolling code system

If your device is “Rolling Code” equipped, it is necessary to follow steps 1 through 4 under the heading “Programming the HomeLink®” before proceeding with the steps listed below.

1. Locate the “training” button on the ceiling mounted garage door opener motor. The exact location and color of the button may vary by brand of garage door opener. Refer to the owner’s guide supplied by the garage door opener manufacturer for the location of this “training” button.
2. Press the “training” button on the ceiling mounted garage door opener motor.

Following this step, you have 30 seconds in which to initiate step 3 below.

3. Press and release the vehicle’s programmed HomeLink® button twice. The garage door may open. If the door does open, the programming process is complete. If the door does not open, press and release the button a third time. This third press and release will complete the programming process by opening the garage door.

The ceiling mounted garage door opener motor should now recognize the HomeLink® unit and be able activate the garage door up/down.

4. Repeat steps 1 through 3 for each remaining HomeLink® button to program another rolling code system.

Programming an entrance gate/programming all devices in the Canadian market

1. Decide which of the 3 HomeLink® buttons you want to program.
2. Place your hand–held gate/device transmitter 25 to 75 mm (1 to 3 in.) away from the surface of the HomeLink®.

Keep the indicator light on the HomeLink® in view while programming.

3. Press and hold the selected HomeLink® button.
4. Continuously press and release (cycle) the hand–held gate/device transmitter button every two seconds until step 5 is complete.
5. When the indicator light on the HomeLink® changes from a slow to a rapid flash after 20 seconds, you can release both buttons.
6. Test the operation of the HomeLink® by pressing the newly programmed button. Check to see if the gate/device operates correctly.
7. Repeat steps 1 through 6 for each remaining HomeLink® button to program another device.

Programming other devices

To program other devices such as home security systems, home door locks or lighting, contact your authorized Toyota dealer for assistance.

Reprogramming a button

Individual HomeLink® buttons cannot be erased, however, to reprogram a single button, follow the procedure “Programming the HomeLink®”.

(b) Operating the HomeLink®

To operate the HomeLink®, press the appropriate HomeLink® button to activate the programmed device. The HomeLink® indicator light should come on. The HomeLink® continues to send the signal for up to 20 seconds as long as the button is pressed.

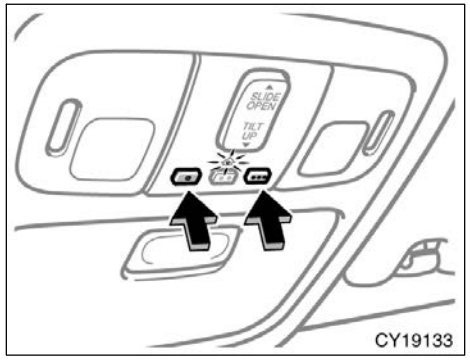

(c) Erasing the entire HomeLink® memory (all three programs)

To erase all previously programmed codes at one time, press and hold down the 2 outside buttons for 20 seconds until the indicator light flashes.

If you sell your vehicle, be sure to erase the programs stored in the HomeLink® memory.

For additional programming assistance with your HomeLink® Universal Transceiver call the:

- The Toyota Customer Experience Center at 1–800–331–4331 (U.S.A.)
- Toyota Canada Customer Interaction Centre at 1–888–869–6828 (Canada)

Refer to HomeLink® on the internet at: WWW.HOMELINK.COM

⚠ CAUTION

- **When programming the HomeLink® Universal Transceiver, you may be operating a garage door or other device. Make sure people and objects are out of the way of the garage door or other device to prevent potential harm or damage.**
- **Do not use this HomeLink® Universal Transceiver with any garage door opener that lacks the safety stop and reverse feature as required by federal safety standards. (This includes any garage door opener model manufactured before April 1, 1982.) A garage door opener which cannot detect an object (signaling the door to stop and reverse), does not meet current federal safety standards. Using a garage door opener without these features increases risk of serious injury or death.**

This device complies with Part 15 of the FCC Rules and with RSS–210 of the IC Rules. Operation is subject to the following two conditions: (1) This device may not cause harmful interference, and (2) this device must accept any interference received, including interference that may cause undesired operation.

WARNING: This transmitter has been tested and complies with FCC and IC rules. Changes or modifications not expressly approved by the party responsible for compliance could void the user’s authority to operate the device.

Auxiliary boxes—

To use the auxiliary boxes, open the lids as shown in the following illustrations.

CAUTION

- **To reduce the chance of injury in case of an accident or a sudden stop, always keep the auxiliary box closed while driving.**
- **Type A—As this holder is designed for holding a light object such as eyeglasses, do not place any heavy objects in them. Heavy objects may cause the holder to open and the contents to fly out resulting in injuries.**

NOTICE

Type A—During hot weather, the interior of the vehicle becomes very hot. Do not leave anything flammable or deformable such as a lighter, glasses, etc. inside.

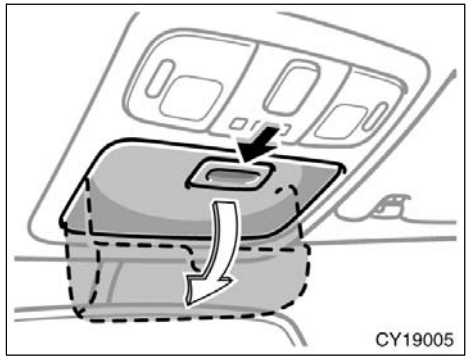

Type A (over head console)

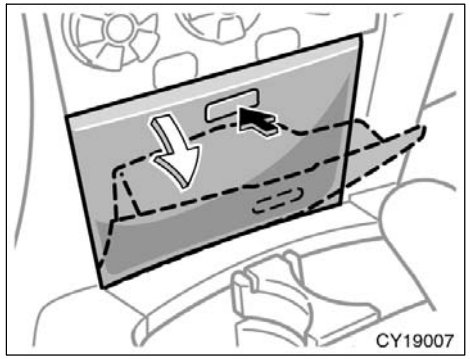

Type B (instrument panel)

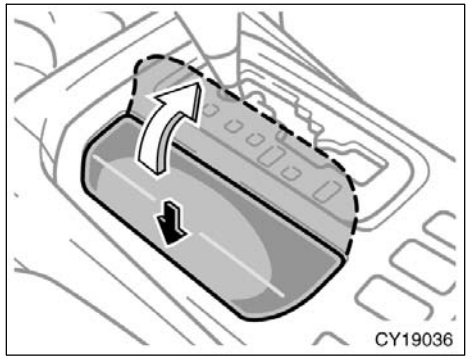

Type C (rear console box)

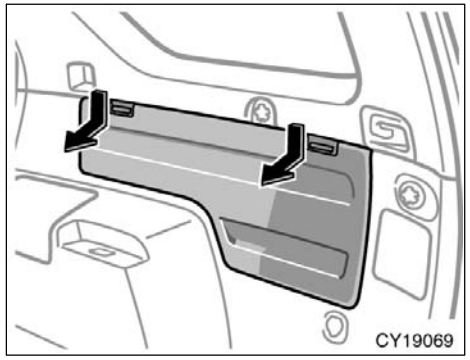

Type E (right side of luggage compartment)

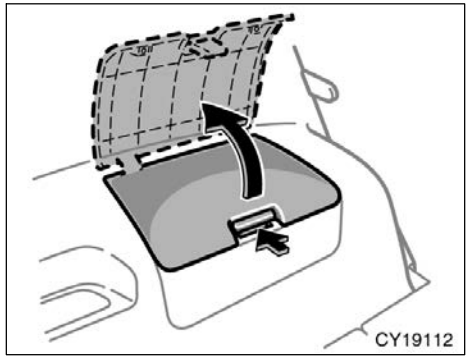

Type D (rear tire house)

—Using the holding belts

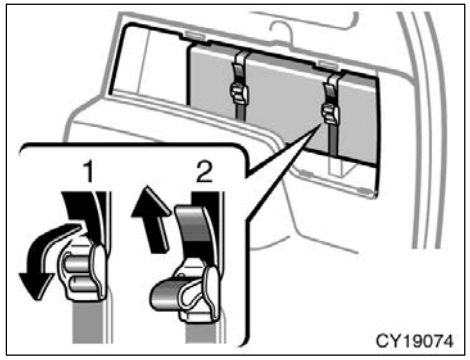

The right side of luggage compartment auxiliary box is equipped with a belt to hold the objects.

To use the belt, do the following.

1. To loosen: Pull the buckle forward.
2. To tighten: Pull on the belt.

Make sure the objects are securely held.

Rear console box

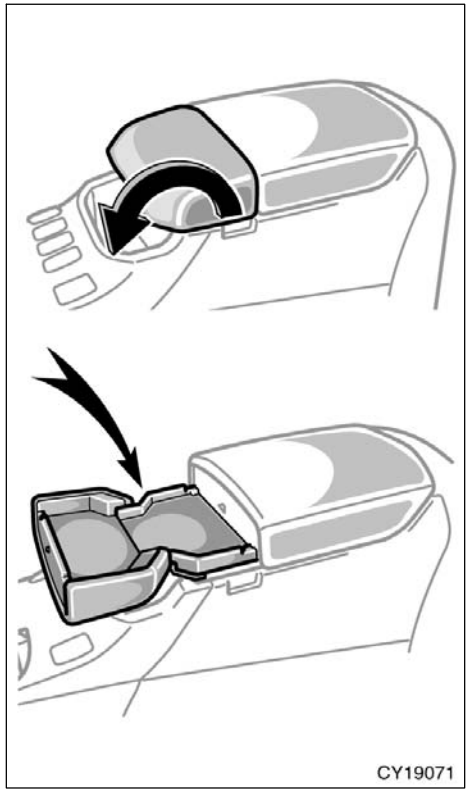

CONSOLE BOX TABLE

To use the console box table, open it.

⚠ CAUTION

To reduce the chance of injury in case of an accident or a sudden stop, always keep the table closed while driving.

NOTICE

To prevent damage to the table, do not place any object heavier than 1 kg (2.20 lb.) on it, and do not leave any object on the table for a long time.

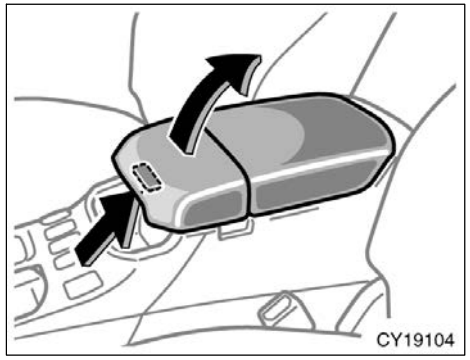

CONSOLE BOX

To access the rear console box, pull up the console box lid while pushing the lock release button.

⚠ CAUTION

To reduce the chance of injury in case of an accident or a sudden stop, always keep the console box closed while driving.

Tissue box holder

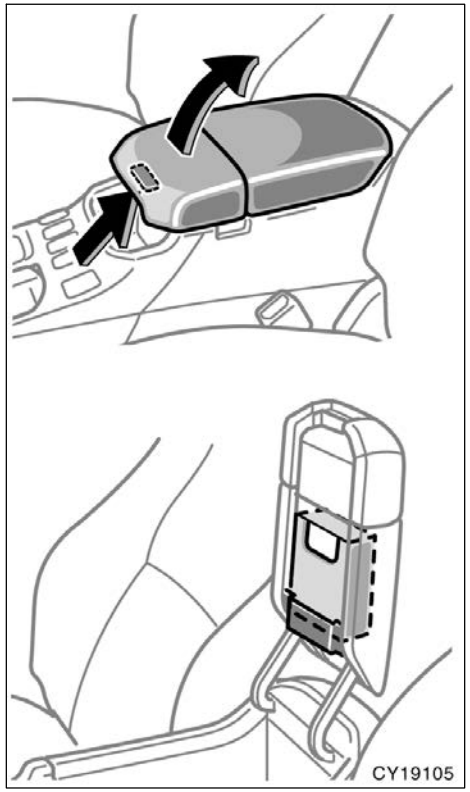

The rear console box is equipped with a tissue box holder on the inside of the rear console box lid.

To use the tissue box holder:

1. Pull up the console box lid while pushing the lock release button.
2. Place a tissue box in the lid.

⚠ CAUTION

To reduce the chance of injury in case of an accident or a sudden stop while driving, keep the console box lid closed when it is not in use.

Coin holder

The rear console box is equipped with a coin holder.

To use the coin holder:

1. Pull up the console box lid while pushing the lock release button.
2. Push coins down into the holder.

The coin holder is detachable.

Trash holder

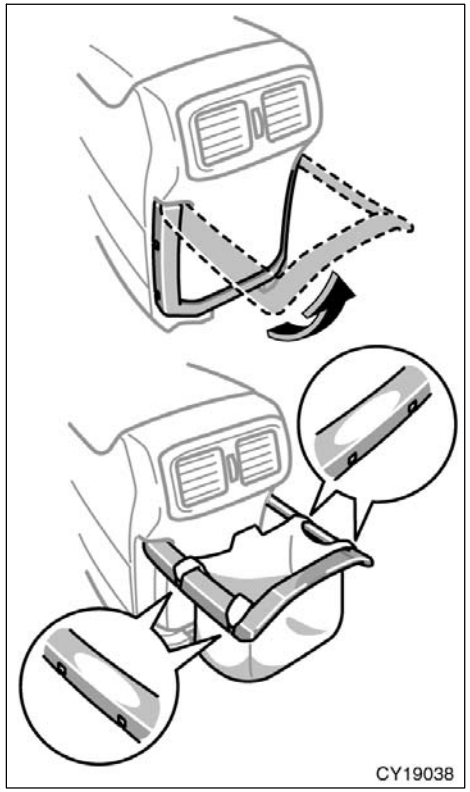

The trash holder is designed to use the grocery bag as a trash bag.

To use the trash holder:

1. Raise the trash holder.
2. Fit the grocery bag onto the holder by hanging its handles on the two hooks indicated at the left and right.

The trash holder can support to 1 kg (2.20 lb.).

⚠ CAUTION

To reduce the chance of injury in case of an accident or a sudden stop while driving, keep the trash holder closed when it is not in use.

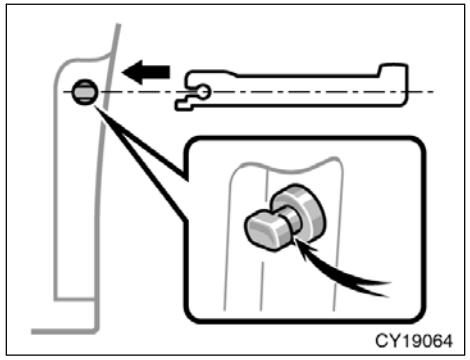

If the trash holder is pulled strongly or stepped on, it will detach from the rear console box to protect it from damaging.

If the trash holder becomes detached, reinstall it in a horizontal direction as indicated in the illustration. It cannot be installed in any other direction.

NOTICE
Do not deliberately pull or step on the trash holder, as it may be damaged or broken.

Front cup holders

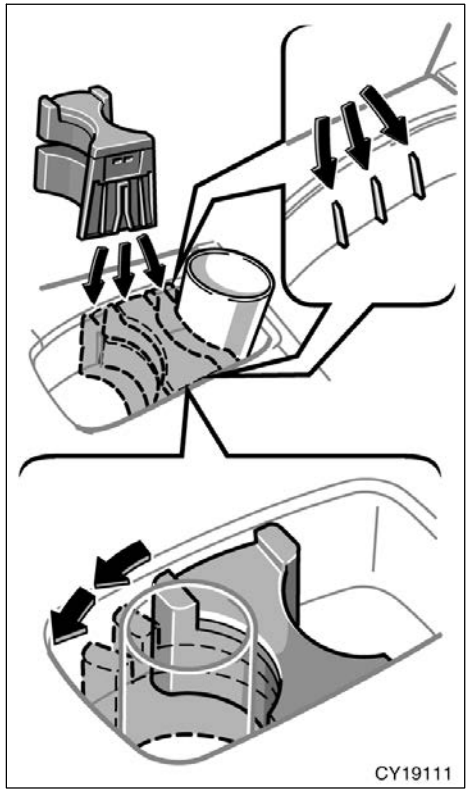

The cup holders are designed for holding cups or drink−cans securely.

The cup holder can be adjustable to the size of the cups or drink−cans by changing the holder position and the arm position, as shown.

With the instrument panel lights on, the front cup holder position indicator lights will come on.

CAUTION
Do not place anything else other than cups or drink−cans in the cup holder, as such items may be thrown about in the compartment and possibly injured people in the vehicle during sudden braking or in an accident.

Rear cup holders and tray (vehicles without third seats)

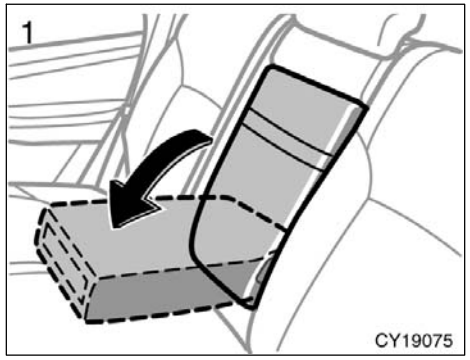

The rear cup holders and tray are housed in the armrest.

The cup holders are designed to hold cups or beverage cans securely.

1. To use the rear cup holders and tray, pull the armrest out.

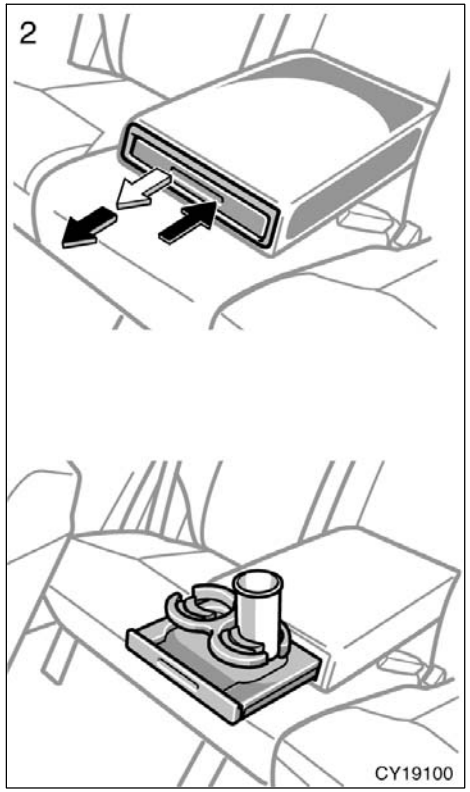

2. To use the rear cup holder, push and pull it out.

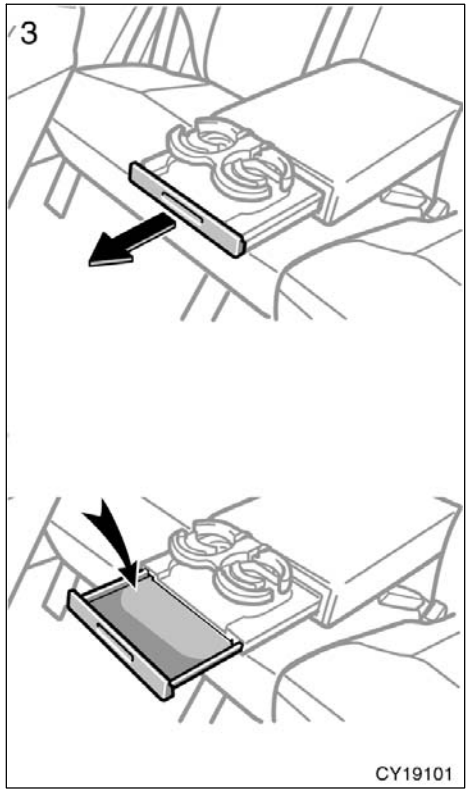

3. To use the tray, pull it out.

⚠ CAUTION

- **Do not place anything else other than cups or drink–cans in the cup holder, as such items may be thrown about in the compartment and possibly injure people in the vehicle during sudden braking or in an accident.**
- **To reduce the chance of injury in case of an accident or sudden stop while driving, keep the cup holder closed when it is not in use.**
- **To reduce the chance of injury in case of an accident or a sudden stop, always keep the tray closed while driving.**

NOTICE

To prevent damage to the tray, do not place any object heavier than 2 kg (4.40 lb.) on it, and do not leave any object on the tray for a long time.

Rear cup holders (vehicles with third seats)

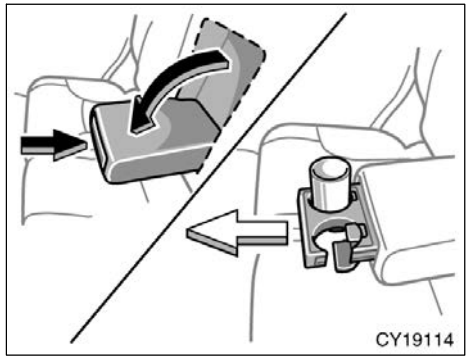

Type A (armrest)

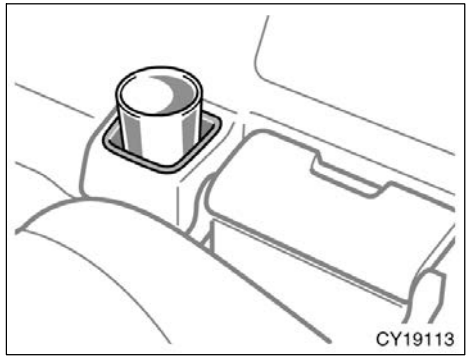

Type B (rear tire house)

The cup holders are designed for holding cups or drink–cans securely.

Type A—To use the holder, pull the armrest out and push the lid.

⚠ CAUTION

- **Do not place anything else other than cups or drink–cans in the cup holder, as such items may be thrown about in the compartment and possibly injure people in the vehicle during sudden braking or in an accident.**
- **Type A—To reduce the chance of injury in case of an accident or sudden stop while driving, keep the cup holder closed when it is not in use.**

Bottle holders

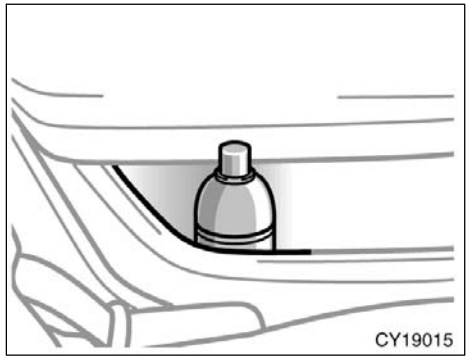

Front doors

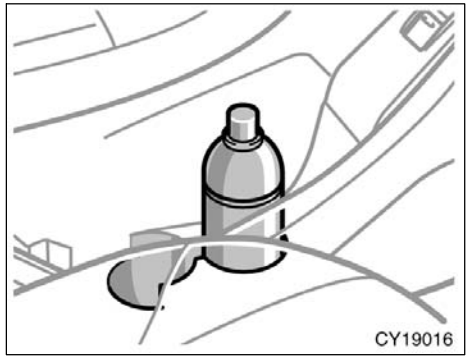

Rear doors

The bottle holders are designed to hold bottles securely.

⚠ CAUTION

Do not attempt to use the holder for any other purpose for which it was intended. Inappropriately sized or shaped objects may be thrown about in the compartment and possibly injure people in the vehicle during a sudden braking or an accident.

NOTICE

Do not put a cup or open bottle in the bottle holder because the contents may spill when the door opens or closes.

Tie–down hooks

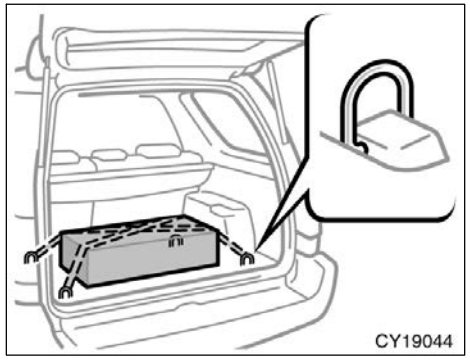

To secure your luggage, use the tie–down hooks as shown above.

See “—Stowage precautions” on page 305 in Section 2 for precautions when loading luggage.

⚠ CAUTION

To avoid personal injury, keep the tie–down hooks folded in place on the floor when not in use.

NOTICE

Do not use the seat anchors instead of the tie–down hooks.

Grocery bag hooks

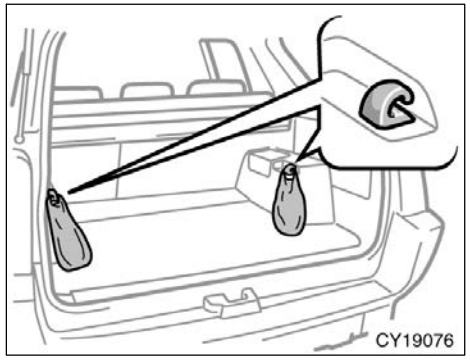

These hooks are designed to hang things like grocery bags.

NOTICE

To prevent damage to the hook, do not hang any object heavier than 1 kg (2.20 lb.) in it.

Cargo net hooks

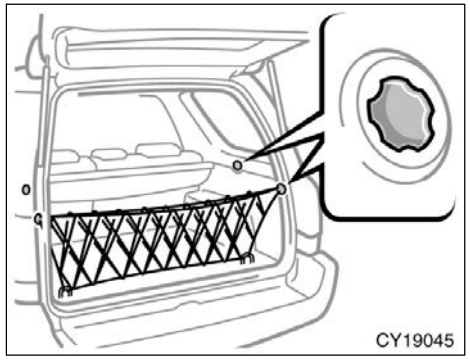

These hooks are designed to hang the cargo net.

To hang the cargo net, use the cargo net hooks and rear tie–down hooks.

Although the cargo net itself is not in-cluded as an original equipment, these hooks can be used to hang the cargo net.

NOTICE

To prevent damage to the hook, avoid hanging things other than a cargo net on it.

Luggage cover

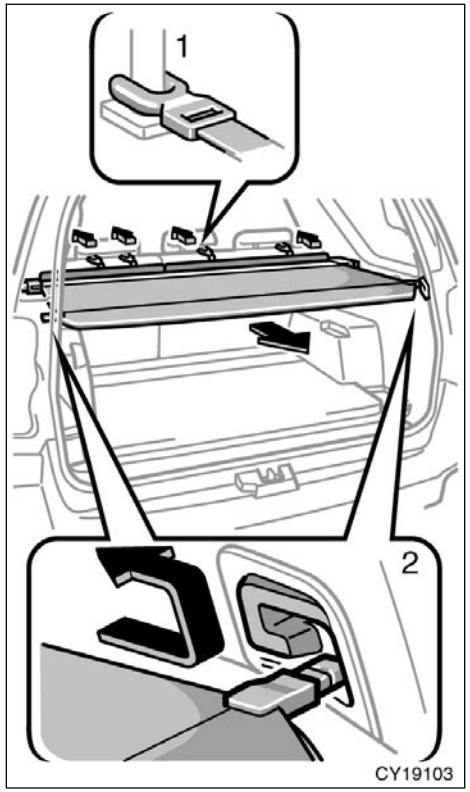

USING LUGGAGE COVER

To use the luggage cover:

1. **Attach the front hooks of the luggage cover to the head restraint.**
2. **Pull out the rear luggage cover and hook it on the anchors.**

⚠ CAUTION

Do not place anything on the luggage cover. Such items may be thrown about and possibly injure people in the vehicle during sudden braking or a collision.

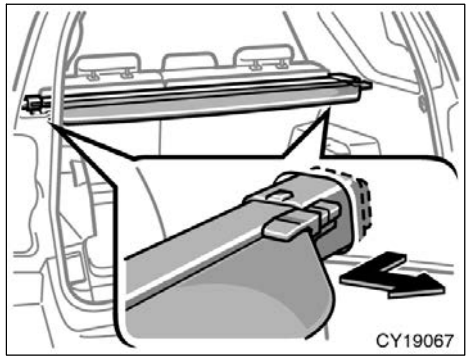

REMOVING LUGGAGE COVER

To remove the luggage cover, detach its hooks from the head restraint. Then, retract and release both ends, and remove the luggage cover.

After you remove the luggage cover, place it somewhere other than the passenger compartment. This will prevent passengers from injury in the event of a sudden stop or accident.

Double deck

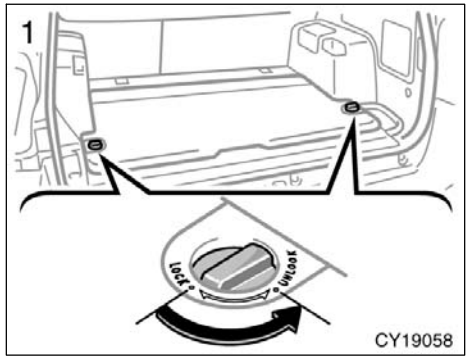

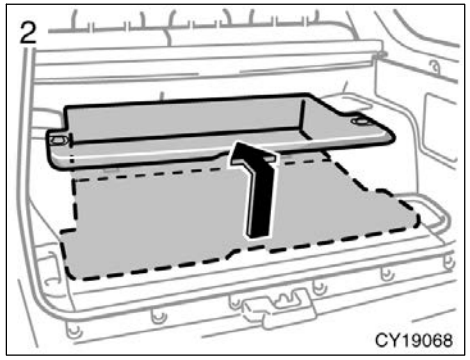

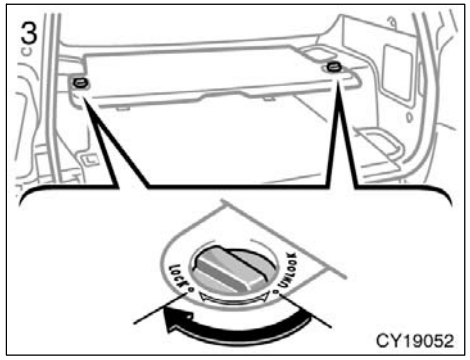

To use the double deck:

1. **Turn the left and right knobs from the “LOCK” position to the “UNLOCK” position.**
2. **Hold the handle and raise the double deck on the rear tire houses.**
3. **Turn the left and right knobs from the “UNLOCK” position to the “LOCK” position.**

Make sure the double deck is securely locked.

⚠ CAUTION

To reduce the chance of injury in case of an accident or sudden stop, make sure that the double deck knobs are always in the “LOCK” position when the double deck is in the raised or lowered position.

Roof luggage carrier

NOTICE

When using the double deck at the raised position, do not place any object heavier than 30 kg (66 lb.).

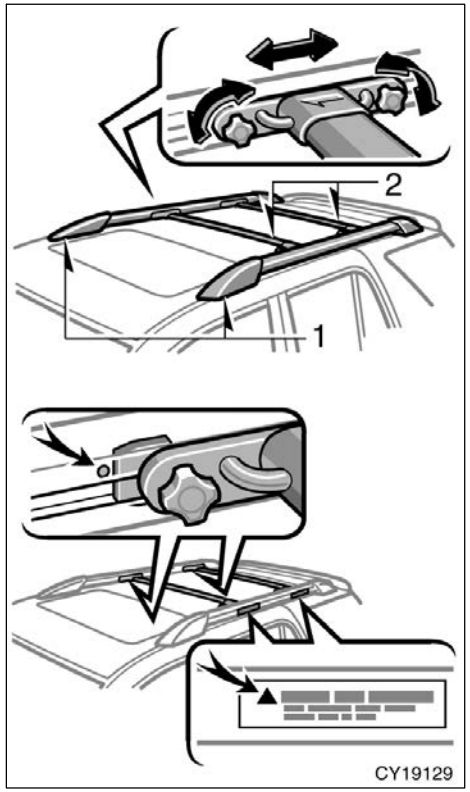

The roof luggage carrier consists of roof rails (1) attached to the roof and sliding cross rails (2).

To adjust the positions of cross rails, do this.

1. Turn the knobs counterclockwise to loosen the cross rails.
2. Slide the cross rails to the desired position for loading the luggages of various sizes.
3. After adjusting, be sure to tighten the cross rails by turning knobs clockwise.

Follow the manufacturer’s instructions and precautions when installing the attachments or their equivalent.

When there is no luggage on the roof luggage carrier, Toyota recommends that the front and rear cross rails be secured in the positions indicated in the illustration, according to the following procedure. This may diminish wind noise during driving.

⚠ CAUTION

When you load cargo on the roof luggage carrier, observe the following:

- **Place the cargo so that its weight is distributed evenly between the front and rear axles.**
- **If loading long or wide cargo, never exceed the vehicle overall length or width. (See “Dimensions and weights” on page 402 in Section 8 for information on your vehicle overall length and width.)**
- **Before driving, make sure the cargo is securely fastened on the roof luggage carrier.**
- **Loading cargo on the roof luggage carrier will make the center of the vehicle gravity higher. Avoid high speeds, sudden starts, sharp turns, sudden braking or abrupt maneuvers, otherwise it may result in loss of control or vehicle rollover due to failure to operate this vehicle correctly.**
- **If driving for a long distance, on rough roads, or at high speeds, stop the vehicle now and then during the trip to make sure the cargo remains in its place.**
- **Do not exceed 54 kg (120 lb.) cargo weight on the roof luggage carrier.**

NOTICE

When loading the luggages, be careful not to scratch the surface of the moon roof.

Floor mat

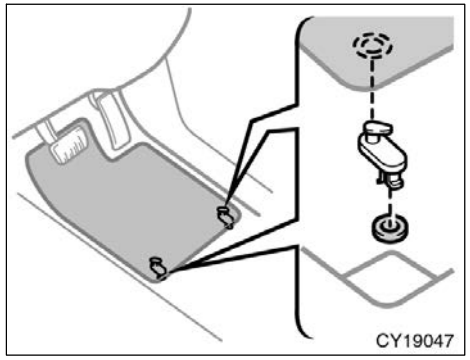

Use a floor mat of the correct size.

If the floor carpet and floor mat have 2 holes, then they are designed for use with locking clips. Fix the floor mat with locking clips into the holes in the floor carpet.

⚠ CAUTION

Make sure the floor mat is properly placed on the floor carpet. If the floor mat slips and interferes with the movement of the pedals during driving, it may cause an accident.

SECTION 2

INFORMATION BEFORE DRIVING YOUR TOYOTA

Off–road vehicle precautions 282
Break–in period 283
Fuel 283
Fuel pump shut off system 285
Operation in foreign countries 285
Three–way catalytic converters 286
Engine exhaust cautions 287
Facts about engine oil consumption 287
Iridium–tipped spark plugs 288
Brake system 289
Brake pad wear limit indicators 292
Limited–slip differential 293
Your Toyota’s identification 293
Theft prevention labels 294
Suspension and chassis 295
Tire information 296
Vehicle load limits 304
Cargo and luggage 305
Types of tires 308

Off−road vehicle precautions

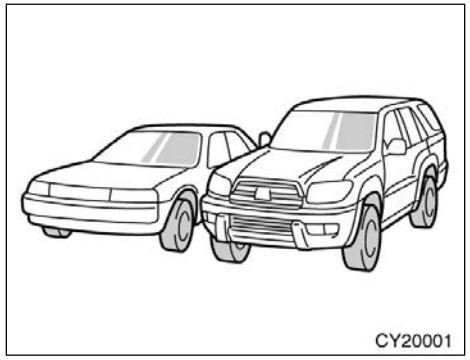

This vehicle belongs to the utility vehicle class, which has higher ground clearance and narrower tread in relation to the height of its center of gravity to make it capable of performing in a wide variety of off−road applications. Specific design characteristics give it a higher center of gravity than ordinary passenger cars. This vehicle design feature causes this type of vehicle to be more likely to rollover. And, utility vehicles have a significantly higher rollover rate than other types of vehicles. An advantage of the higher ground clearance is a better view of the road allowing you to anticipate problems. It is not designed for cornering at the same speeds as ordinary passenger cars any more than low−slung sports cars designed to perform satisfactorily under off−road conditions. Therefore, sharp turns at excessive speeds may cause rollover.

⚠ CAUTION

Always observe the following precautions to minimize the risk of serious personal injury or damage to your vehicle:

- **In a rollover crash, an unbelted person is significantly more likely to die than a person wearing a seat belt. Therefore, the driver and all passengers should fasten their seat belts whenever the vehicle is moving.**
- **Avoid sharp turns or abrupt maneuvers, if at all possible. Failure to operate this vehicle correctly may result in loss of control or vehicle rollover causing death or serious injury.**
- **Loading cargo on the roof luggage carrier will make the center of the vehicle gravity higher. Avoid high speeds, sudden starts, sharp turns, sudden braking or abrupt maneuvers, otherwise it may result in loss of control or vehicle rollover due to failure to operate this vehicle correctly.**

- **Always slow down in gusty cross-winds. Because of its profile and higher center of gravity, your vehicle is more sensitive to side winds than an ordinary passenger car. Slowing down will allow you to have better control.**
- **When driving off–road or in rugged terrain, do not drive at excessive speeds, jump, make sharp turns, strike objects, etc. This may cause loss of control or vehicle rollover causing death or serious injury. You are also risking expensive damage to your vehicle’s suspension and chassis.**
- **Do not drive horizontally across steep slopes. Driving straight up or straight down is preferred. Your vehicle (or any similar off–road vehicle) can tip over sideways much more easily than forward or backward.**

Break–in period

Drive gently and avoid high speeds.

Your vehicle does not need an elaborate break–in. But following a few simple tips for the first 1600 km (1000 miles) can add to the future economy and long life of your vehicle:

- Avoid full throttle acceleration when starting and driving.
- Avoid racing the engine.
- Try to avoid hard stops during the first 300 km (200 miles).
- Do not drive for a long time at any single speed, either fast or slow.
- Do not tow a trailer during the first 800 km (500 miles).

Fuel

FUEL TYPE

Your new vehicle must use only unleaded gasoline.

To help prevent gas station mix–ups, your Toyota has a smaller fuel tank opening. The special nozzle on pumps with unleaded fuel will fit it, but the larger standard nozzle on pumps with leaded gas will not.

At a minimum, the gasoline you use should meet the specifications of ASTM D4814 in the U.S.A. and CGSB 3.5–M93 in Canada.

NOTICE

Do not use leaded gasoline. Use of leaded gasoline will cause the three–way catalytic converter to lose its effectiveness and the emission control system to function improperly. Also, this can increase maintenance costs.

OCTANE RATING

Select Octane Rating 87 (Research Octane Number 91) or higher. For improved vehicle performance, the use of premium unleaded gasoline with an Octane Rating of 91 (Research Octane Number 96) or higher is recommended.

Use of unleaded gasoline with an octane rating or research octane number lower than stated above will cause persistent heavy knocking. If it is severe, this will lead to engine damage.

If your engine knocks...

If you detect heavy knocking even when using the recommended fuel, or if you hear steady knocking while holding a steady speed on level roads, consult your Toyota dealer.

However, occasionally, you may notice light knocking for a short time while accelerating or driving up hills. This is normal and there is no need for concern.

GASOLINE CONTAINING DETERGENT ADDITIVES

Toyota recommends the use of gasoline that contains detergent additives to avoid build–up of engine deposits.

However, all gasoline sold in the U.S. contains detergent additives to keep clean and/or clean intake systems.

QUALITY GASOLINE

Automotive manufacturers in the U.S., Europe and Japan have developed a specification for quality fuel named World–Wide Fuel Charter (WWFC) that is expected to be applied world wide. The WWFC consists of four categories that depend on required emission levels. In the U.S., category 4 has been adopted. The WWFC improves air quality by providing for better emissions in vehicle fleets, and customer satisfaction through better vehicle performance.

CLEANER BURNING GASOLINE

Cleaner burning gasoline, including reformulated gasoline that contains oxygenates such as ethanol or MTBE is available in many areas.

Toyota recommends the use of cleaner burning gasoline and appropriately blended reformulated gasoline. These types of gasoline provide excellent vehicle performance, reduce vehicle emissions, and improve air quality.

OXYGENATES IN GASOLINE

Toyota allows the use of oxygenate blended gasoline where the oxygenate content is up to 10% ethanol or 15% MTBE. If you use gasohol in your Toyota, be sure that it has an octane rating no lower than 87.

Toyota does not recommend the use of gasoline containing methanol.

GASOLINE CONTAINING MMT

Some gasoline contain an octane enhancing additive called MMT (Methylcyclopentadienyl Manganese Tricarbonyl).

Toyota does not recommend the use of gasoline that contains MMT. If fuel containing MMT is used, your emission control system may be adversely affected. The Malfunction Indicator Lamp on the instrument cluster may come on. If this happens, contact your Toyota dealer for service.

GASOLINE QUALITY

In a very few cases, you may experience driveability problems caused by the particular gasoline that you are using. If you continue to have unacceptable driveability, try changing gasoline brands. If this does not rectify your problem, then consult your Toyota dealer.

NOTICE

- ***Do not use gasohol other than stated above. It will cause fuel system damage or vehicle performance problems.***
- ***If driveability problems occur (poor hot starting, vaporizing, engine knock, etc.), discontinue the use.***
- ***Take care not to spill gasohol during refueling. Gasohol may cause paint damage.***

FUEL TANK CAPACITY

87 L (23.0 gal., 19.1 Imp. gal.)

Fuel pump shut off system

The fuel pump shut off system stops supplying fuel to the engine to minimize the risk of fuel leakage when the engine stalls or an airbag inflates upon collision. To restart the engine after the fuel pump shut off system activates, turn the ignition switch to “ACC” or “LOCK” once and start it.

⚠ CAUTION

Inspect the ground under the vehicle before restarting the engine. If you find that liquid has leaked onto the ground, it is the fuel system has been damaged and it is in need of repair. In this case, do not restart the engine.

Operation in foreign countries

If you plan to drive your Toyota in another country...

First, comply with the vehicle registration laws.

Second, confirm the availability of the correct fuel (unleaded and minimum octane number).

Three−way catalytic converters

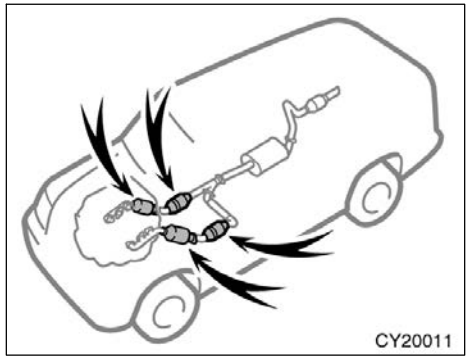

The three−way catalytic converter is an emission control device installed in the exhaust system.

The purpose is to reduce pollutants in the exhaust gas.

⚠ CAUTION

- **Keep people and combustible materials away from the exhaust pipe while the engine is running. The exhaust gas is very hot.**
- **Do not idle or park your vehicle over anything that might burn easily such as grass, leaves, paper or rags.**

NOTICE

A large amount of unburned gases flowing into the three−way catalytic converter may cause it to overheat and create a fire hazard. To prevent this and other damage, observe the following precautions:

- ***Use only unleaded gasoline.***
- ***Do not drive with an extremely low fuel level; running out of fuel could cause the engine to misfire, creating an excessive load on the three−way catalytic converter.***
- ***Do not allow the engine to run at idle speed for more than 20 minutes.***
- ***Avoid racing the engine.***
- ***Do not push−start or pull−start your vehicle.***
- ***Do not turn off the ignition while the vehicle is moving.***
- ***Keep your engine in good running order. Malfunctions in the engine electrical system, electronic ignition system/distributor ignition system or fuel systems could cause an extremely high three−way catalytic converter temperature.***
- ***If the engine becomes difficult to start or stalls frequently, take your vehicle in for a check−up as soon as possible. Remember, your Toyota dealer knows your vehicle and its three−way catalytic converter system best.***
- ***To ensure that the three−way catalytic converter and the entire emission control system operate properly, your vehicle must receive the periodic inspections required by the Toyota Maintenance Schedule. For scheduled maintenance information, refer to the “Scheduled Maintenance Guide” or “Owner’s Manual Supplement”.***

Engine exhaust cautions

⚠ CAUTION

- **Avoid inhaling the engine exhaust. It contains carbon monoxide, which is a colorless and odorless gas. It can cause unconsciousness or even death.**
- **Make sure the exhaust system has no holes or loose connections. The system should be checked from time to time. If you hit something, or notice a change in the sound of the exhaust, have the system checked immediately.**
- **Do not run the engine in a garage or enclosed area except for the time needed to drive the vehicle in or out. The exhaust gases cannot escape, making this a particularly dangerous situation.**
- **Do not remain for a long time in a parked vehicle with the engine running. If it is unavoidable, however, do so only in an unconfined area and adjust the heating or cooling system to force outside air into the vehicle.**
- **Keep the back door and back window closed while driving. An open or unsealed back door and back window, may cause exhaust gases to be drawn into the vehicle.**
- **To allow proper operation of your vehicle’s ventilation system, keep the inlet grilles in front of the windshield clear of snow, leaves, or other obstructions.**
- **If you smell exhaust fumes in the vehicle, drive with the windows open and the back door and back window closed. Have the cause immediately located and corrected.**

Facts about engine oil consumption

FUNCTIONS OF ENGINE OIL

Engine oil has the primary functions of lubricating and cooling the inside of the engine, and plays a major role in maintaining the engine in proper working order.

ENGINE OIL CONSUMPTION

It is normal that an engine should consume some engine oil during normal engine operation. The causes of oil consumption in a normal engine are as follows.

- Oil is used to lubricate pistons, piston rings and cylinders. A thin film of oil is left on the cylinder wall when a piston moves downwards in the cylinder. High negative pressure generated when the vehicle is decelerating sucks some of this oil into the combustion chamber. This oil as well as some part of the oil film left on the cylinder wall is burned by the high temperature combustion gases during the combustion process.
- Oil is also used to lubricate the stems of the intake valves. Some of this oil is sucked into the combustion chamber together with the intake air and is burned along with the fuel. High temperature exhaust gases also burn the oil used to lubricate the exhaust valve stems.

The amount of engine oil consumed depends on the viscosity of the oil, the quality of the oil and the conditions the vehicle is driven under.

More oil is consumed by high–speed driving and frequent acceleration and deceleration.

A new engine consumes more oil, since its pistons, piston rings and cylinder walls have not become conditioned.

Oil consumption: Max. 1.0 L per 1000 km (1.1 qt./600 miles, 0.9 Imp. qt./600 miles)

When judging the amount of oil consumption, note that the oil may become diluted and make it difficult to judge the true level accurately.

As an example, if a vehicle is used for repeated short trips, and consumes a normal amount of oil, the dipstick may not show any drop in the oil level at all, even after 1000 km (600 miles) or more. This is because the oil is gradually becoming diluted with fuel or moisture, making it appear that the oil level has not changed.

The diluting ingredients evaporate out when the vehicle is then driven at high speeds, as on an expressway, making it appear that oil is excessively consumed after driving at high speeds.

IMPORTANCE OF ENGINE OIL LEVEL CHECK

One of the most important points in proper vehicle maintenance is to keep the engine oil at the optimum level so that oil function will not be impaired. Therefore, it is essential that the oil level be checked regularly. Toyota recommends that the oil level be checked every time you refuel the vehicle.

NOTICE

Failure to check the oil level regularly could lead to serious engine trouble due to insufficient oil.

For detailed information on oil level check, see “Checking the engine oil level” on page 376 in Section 7–2.

Iridium–tipped spark plugs (2UZ–FE engine)

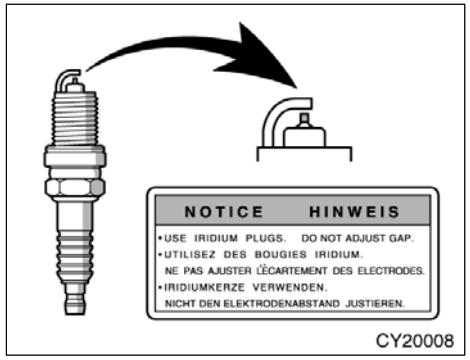

Your engine is fitted with iridium–tipped spark plugs.

NOTICE

Use only iridium–tipped spark plugs and do not adjust gaps for your engine performance and smooth driveability.

Brake system

This brake system has 2 independent hydraulic circuits. If either circuit should fail, the other will still work. However, the pedal will be harder to press, and your stopping distance will increase. Also, the brake system warning light may come on.

CAUTION

Do not drive your vehicle with only a single brake system. Have your brakes fixed immediately.

BRAKE BOOSTER

The brake booster uses brake fluid pressurized by the pump to power–assist the brakes. If the brake booster fails during driving, the brake system warning light comes on and buzzer sounds continuously. In this case, the brakes may not work properly. If they do not work well, depress the brake pedal firmly. If the brake system warning light comes on, immediately stop your vehicle and contact your Toyota dealer.

It is not a malfunction that the brake system warning light may stay on for 60 seconds after the ignition key is turned to the “ON” position.

Depressing the brake pedal repeatedly may turn on the brake system warning light and buzzer. It is normal if the light turns off and the buzzer stops sounding after a few seconds.

You may hear a small sound in the engine compartment after the engine is started or the brake pedal is depressed repeatedly. This is a pump pulsating sound of the brake system, and it is not a malfunction.

CAUTION

- **Do not pump the brake pedal if the engine stalls. Each push on the pedal uses up your brake fluid pressure reserve.**
- **Even if the power assist is completely lost, the brakes will still work. But you will have to push the pedal hard, much harder than normal. And your braking distance will increase.**

ANTI–LOCK BRAKE SYSTEM (with “ABS” warning light)

The anti–lock brake system is designed to help prevent lock–up of the wheels during a sudden braking or braking on slippery road surfaces. This assists in providing directional stability and steering performance of the vehicle under these circumstances.

Effective way to press the ABS brake pedal: When the anti–lock brake system function is in action, you may feel the brake pedal pulsating and hear a noise. In this situation, to let the anti–lock brake system work for you, just hold the brake pedal down more firmly. Do not pump the brake in a panic stop. This will result in reduced braking performance.

The anti–lock brake system becomes operative after the vehicle has accelerated to a speed in excess of approximately 10 km/h (6 mph). It stops operating when the vehicle decelerates to a speed below approximately 5 km/h (3 mph).

Depressing the brake pedal on slippery road surfaces such as on a manhole cover, a steel plate at a construction site, joints in a bridge, etc. on a rainy day tends to activate the anti–lock brake system.

You may hear a click or motor sound in the engine compartment for a few seconds when the engine is started or just after the vehicle begins to move. This means that the anti–lock brake system is in the self–check mode, and does not indicate a malfunction.

When the anti–lock brake system is activated, the following conditions may occur. They do not indicate a malfunction of the system:

- You may hear the anti–lock brake system operating and feel the brake pedal pulsating and the vibrations of the vehicle body and steering wheel. You may also hear the motor sound in the engine compartment even after the vehicle is stopped.
- At the end of the anti–lock brake system activation, the brake pedal may move a little forward.

⚠ CAUTION

Do not overestimate the anti–lock brake system: Although the anti–lock brake system assists in providing vehicle control, it is still important to drive with all due care and maintain a moderate speed and safe distance from the vehicle in front of you, because there are limits to the vehicle stability and effectiveness of steering wheel operation even with the anti–lock brake system on.

If tire grip performance exceeds its capability, or if hydroplaning occurs during high speed driving in the rain, the anti–lock brake system does not provide vehicle control.

Anti–lock brake system is not designed to shorten the stopping distance: Always drive at a moderate speed and maintain a safe distance from the vehicle in front of you. Compared with vehicles without an anti–lock brake system, your vehicle may require a longer stopping distance in the following cases:

- **Driving on rough, gravel or snow–covered roads.**
- **Driving with tire chains installed.**
- **Driving over the steps such as the joints on the road.**
- **Driving on roads where the road surface is pitted or has other differences in surface height.**

Install all 4 tires of specified size at appropriate pressure: The anti–lock brake system detects vehicle speeds using the speed sensors for respective wheels’ turning speeds. The use of tires other than specified may fail to detect the accurate turning speed resulting in a longer stopping distance.

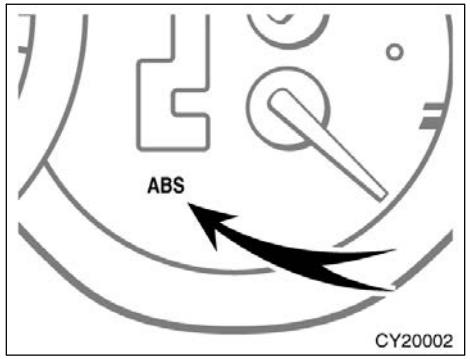

Type A

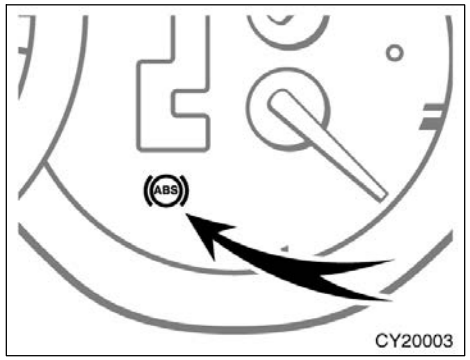

Type B

“ABS” warning light

The light comes on when the ignition key is turned to the “ON” position. If the anti–lock brake system and the brake assist system work properly, the light turns off after a few seconds. Thereafter, if either of the systems malfunctions, the light comes on again.

When the “ABS” warning light is on (and the brake system warning light is off), the following systems do not operate, but the brake system still operates conventionally.

- Anti–lock brake system
- Brake assist system
- Traction control system (two–wheel drive models)
- Active traction control system (four–wheel drive models)
- “AUTO LSD” system (two–wheel drive models)
- Vehicle stability control system
- Downhill assist control system (four–wheel drive models)
- Hill–start assist control system

When the “ABS” warning light is on (and the brake system warning light is off), the anti–lock brake system does not operate so that the wheels will lock up during a sudden braking or braking on slippery road surfaces.

“VSC TRAC” warning light may come on with the “ABS” warning light (brake assist system warning light) when there is a malfunction somewhere in the anti–lock brake system (brake assist system).

If either of the following conditions occurs, this indicates a malfunction somewhere in the components monitored by the warning light system. Contact your Toyota dealer as soon as possible to service the vehicle.

- The light does not come on when the ignition key is turned to the “ON” position, or remains on.
- The light comes on while you are driving.

A warning light turning on briefly during operation does not indicate a problem.

CAUTION

If the “ABS” warning light remains on together with the brake system warning light, immediately stop your vehicle at a safe place and contact your Toyota dealer.

In this case, not only the anti–lock brake system will fail but also the vehicle will become extremely unstable during braking.

Either of the following conditions may occur, but do not indicate a malfunction:

- The light may stay on for about 60 seconds after the ignition key is turned to the “ON” position. It is normal if it turns off after a while.
- Depressing the brake pedal repeatedly may turn on the light. It is normal if it turns off after a few seconds.

DRUM–IN–DISC TYPE PARKING BRAKE SYSTEM

Your vehicle has a drum–in–disc type parking brake system. This type of brake system needs bedding–down of the brake shoes periodically or whenever the parking brake shoes and/or drums are replaced.

Have your Toyota dealer perform the bedding–down.

BRAKE ASSIST SYSTEM

When you slam the brakes on, the brake assist system judges as an emergency stop and provides more powerful braking for a driver who cannot hold down the brake pedal firmly.

When you slam the brakes on, more powerful braking will be applied. At this time, you may hear a sound in the engine compartment and feel the vibrations of the brake pedal. This does not indicate a malfunction.

The brake assist system becomes operative after the vehicle has accelerated to a speed in excess of approximately 10 km/h (6 mph). It stops operating when the vehicle decelerates to a speed below approximately 5 km/h (3 mph).

For an explanation of this system’s warning light, see “Service reminder indicators and warning buzzers” on page 145 in Section 1–6.

Brake pad wear limit indicators

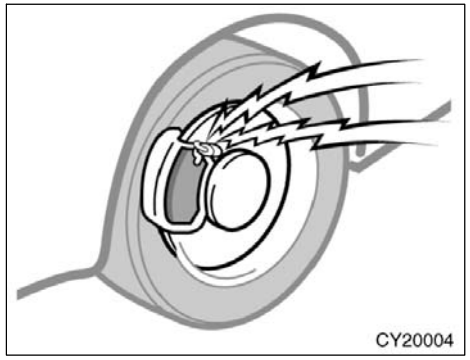

The brake pad wear limit indicators on your disc brakes give a warning noise when the brake pads are worn to where replacement is required.

If you hear a squealing or scraping noise while driving, have the brake pads checked and replaced by your Toyota dealer as soon as possible. Expensive rotor damage can result if the pads are not replaced when necessary.

Limited−slip differential (four−wheel drive models)

Your Toyota is equipped with a limited−slip center differential (transfer). If one wheel begins to spin, the limited−slip center differential (transfer) is designed to aid traction by automatically transmitting driving force to the wheels on the other drive axle. It transmits driving force to the front wheels if a rear wheel spins, and to the rear wheels if a front wheel spins.

⚠ CAUTION

Do not start or run the engine while your vehicle is supported by a jack. The vehicle could be driven off the jack and could pose a danger or result in serious injury.

NOTICE

Use only a spare tire of the same brand, size, construction and load capacity as the original tires on your Toyota because damage to the limited−slip differential could possibly occur with another tire type.

Your Toyota’s identification— —Vehicle identification number

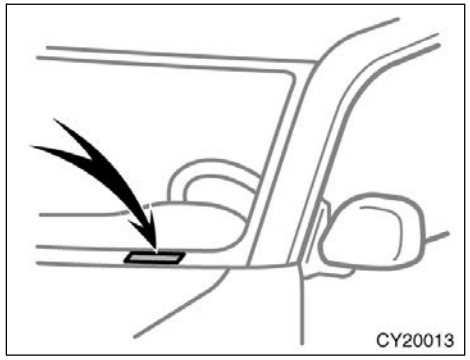

The vehicle identification number (VIN) is the legal identifier for your vehicle. This number is on the left top of the instrument panel, and can be seen through the windshield from outside.

This is the primary identification number for your Toyota. It is used in registering the ownership of your vehicle.

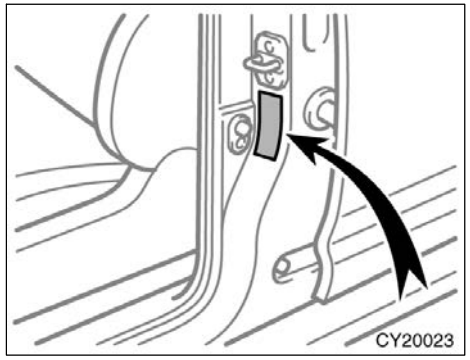

The vehicle identification number (VIN) is also on the Certification Label.

—Engine number

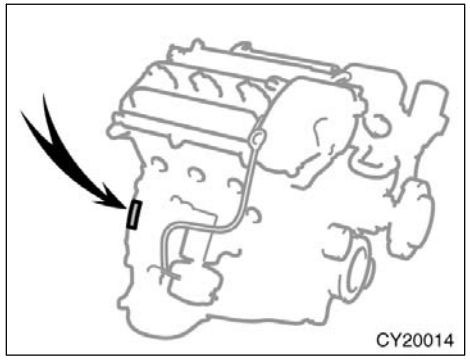

1GR−FE engine

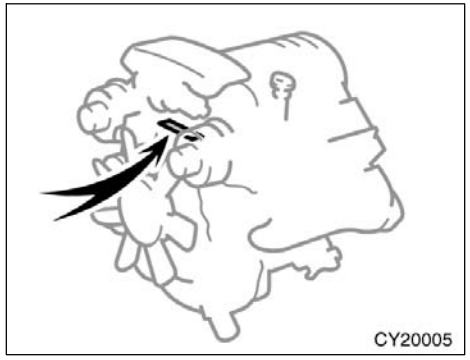

2UZ−FE engine

The engine number is stamped on the engine block as shown.

Theft prevention labels (except for Canada)

Your new vehicle carries theft prevention labels which are approximately 56 mm (2.20 in.) by 16 mm (0.63 in.).

The purpose of these labels is to reduce the incidence of vehicle thefts by facilitating the tracing and recovery of parts from stolen vehicles. The label is designed so that once it is applied to a surface, any attempt to remove it will result in destroying the integrity of the label. Transferring these labels intact from one part to another, will be impossible.

NOTICE

You should not attempt to remove the theft prevention labels as it may violate certain state or federal laws.

Suspension and chassis

⚠ CAUTION

Do not modify the suspension/chassis with lift kits, spacers, springs, etc. It can cause dangerous handling characteristics resulting in loss of control.

Tire information—
—Tire symbols

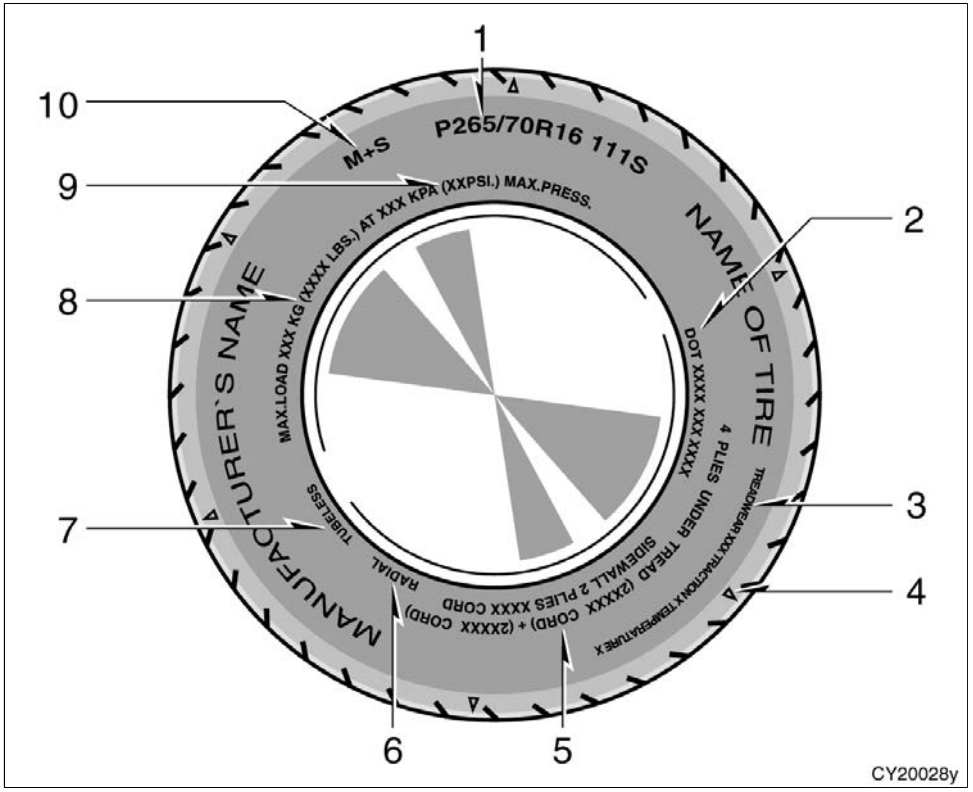

This illustration indicates typical tire symbols.

1. **Tire size—**For details, see “—Tire size” on page 298.
2. **DOT and Tire Identification Number (TIN)—**For details, see “—DOT and Tire Identification Number (TIN)” on page 297.
3. **Uniform tire quality grading—**For details, see “Uniform tire quality grading” that follows.
4. **The location of the tread wear indicators—**For details, see “Checking and replacing tires” on page 384.
5. **Tire ply composition and materials—**Plies mean a layer of rubber–coated parallel cords. Cords mean the strands forming the plies in the tire.
6. **Radial tires or bias–ply tires—**A radial tire has “RADIAL” on the sidewall. A tire not marked with “RADIAL” is a bias–ply tire.

7. **“TUBELESS” or “TUBE TYPE”—**A tubeless tire does not have a tube inside the tire and air is directly filled in the tire. A tube type tire has a tube inside the tire and the tube maintains the air pressure.
8. **Load limit at maximum cold tire inflation pressure—**For details, see “Checking and replacing tires” on page 384.
9. **Maximum cold tire inflation pressure—**This means the pressure to which a tire may be inflated. For details about recommended cold tire inflation pressure, see “Tires” on page 406.
10. **Summer tire or all season tire—**An all season tire has “M+S” on the sidewall. The tire not marked with “M+S” is a summer tire. For details, see “Types of tires” on page 308.

—DOT and Tire Identification Number (TIN)

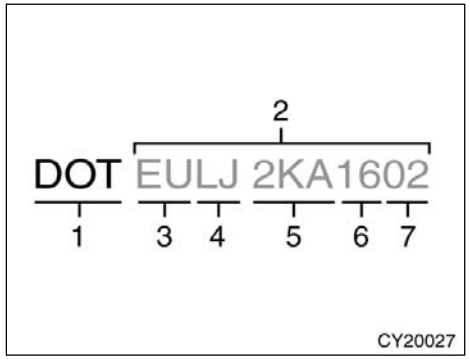

This illustration indicates typical DOT and Tire Identification Number (TIN).

1. “DOT” symbol
2. Tire Identification Number (TIN)
3. Tire manufacturer’s identification mark
4. Tire size code
5. Manufacturer’s optional tire type code (3 or 4 letters)
6. Manufacturing week
7. Manufacturing year

The “DOT” symbol certifies that the tire conforms to applicable Federal Motor Vehicle Safety Standards.

—Tire size

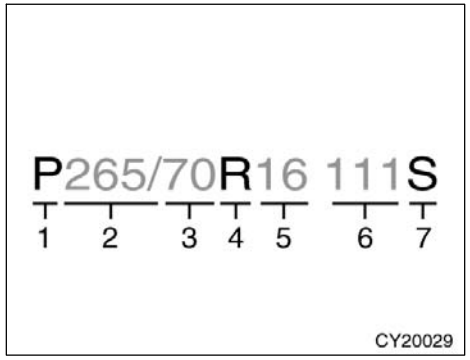

This illustration indicates typical tire size.

1. Tire use (P=Passenger car, T=Temporary use)
2. Section width (in millimeters)
3. Aspect ratio (tire height to section width)
4. Tire construction code (R=Radial, D=Diagonal)
5. Wheel diameter (in inches)
6. Load index (2 digits or 3 digits)
7. Speed symbol (alphabet with one letter)

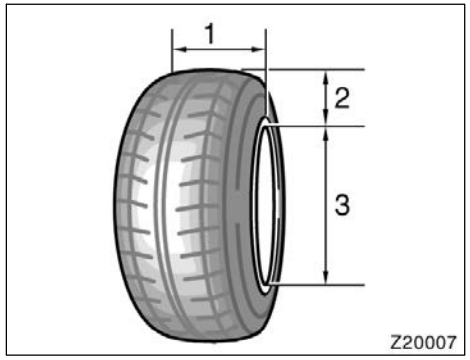

1. Section width
2. Tire height
3. Wheel diameter

—Name of each section of tire

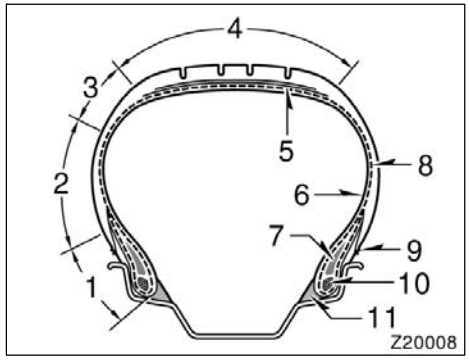

1. Bead
2. Sidewall
3. Shoulder
4. Tread
5. Belt
6. Inner liner
7. Reinforcing rubber
8. Carcass
9. Rim lines
10. Bead wires
11. Chafer

—Uniform tire quality grading

This information has been prepared in accordance with regulations issued by the National Highway Traffic Safety Administration of the U.S. Department of Transportation. It provides the purchasers and/or prospective purchasers of Toyota vehicles with information on uniform tire quality grading.

Your Toyota dealer will help answer any questions you may have as you read this information.

DOT quality grades—All passenger vehicle tires must conform to Federal Safety Requirements in addition to these grades. Quality grades can be found where applicable on the tire sidewall between tread shoulder and maximum section width. For example: Treadwear 200 Traction AA Temperature A

Treadwear—The treadwear grade is a comparative rating based on the wear rate of the tire when tested under controlled conditions on a specified government test course. For example, a tire graded 150 would wear one and a half (1–1/2) times as well on the government course as a tire graded 100. The relative performance of tires depends upon the actual conditions of their use, however, and may depart significantly from the norm due to variations in driving habits, service practices and differences in road characteristics and climate.

Traction AA, A, B, C—The traction grades, from highest to lowest, are AA, A, B, and C, and they represent the tire’s ability to stop on wet pavement as measured under controlled conditions on specified government test surfaces of asphalt and concrete. A tire marked C may have poor traction performance.

Warning: The traction grade assigned to this tire is based on braking (straight ahead) traction tests and does not include cornering (turning) traction.

Temperature A, B, C—The temperature grades are A (the highest), B, and C, representing the tire’s resistance to the generation of heat and its ability to dissipate heat when tested under controlled conditions on a specified indoor laboratory test wheel. Sustained high temperature can cause the material of the tire to degenerate and reduce tire life, and excessive temperature can lead to sudden tire failure. The grade C corresponds to a level of performance which all passenger car tires must meet under the Federal Motor Vehicle Safety Standard No.109. Grades B and A represent higher levels of performance on the laboratory test wheel than the minimum required by law.

Warning: The temperature grades for this tire are established for a tire that is properly inflated and not overloaded. Excessive speed, underinflation, or excessive loading, either separately or in combination, can cause heat buildup and possible tire failure.

—Glossary of tire terminology

Tire related term	Meaning
Accessory weight	the combined weight (in excess of those standard items which may be replaced) of automatic transmission, power steering, power brakes, power windows, power seats, radio, and heater, to the extent that these items are available as factory–installed equipment (whether installed or not)
Cold tire inflation pressure	tire inflation pressure when the vehicle has been parked for at least 3 hours or more, or it has not been driven more than 1.5 km or 1 mile under that condition
Curb weight	the weight of a motor vehicle with standard equipment including the maximum capacity of fuel, oil, and coolant, and, if so equipped, air conditioning and additional weight optional engine
Intended outboard sidewall	(A) the sidewall that contains a whitewall, bears white lettering or bears manufacturer, brand, and/or model name molding that is higher or deeper than the same molding on the other sidewall of the tire, or (B) the outward facing sidewall of an asymmetrical tire that has a particular side that must always face outward when mounted on a vehicle
Maximum inflation pressure	the maximum cold inflation pressure to which a tire may be inflated and it is shown on the sidewall of the tire
Maximum loaded vehicle weight	the sum of— (a) curb weight; (b) accessory weight; (c) vehicle capacity weight; and (d) production options weight

Tire related term	Meaning
Normal occupant weight	68 kg (150 lb.) times the number of occupants specified in the second column of Table 1 that follows
Occupant distribution	distribution of occupants in a vehicle as specified in the third column of Table 1 that follows
Production options weight	the combined weight of those installed regular production options weighing over 2.3 kg (5 lb.) in excess of those standard items which they replace, not previously considered in curb weight or accessory weight, including heavy duty brakes, ride levelers, roof rack, heavy duty battery, and special trim
Recommended inflation pressure	cold tire inflation pressure recommended by a manufacturer
Rim	a metal support for a tire or a tire and tube assembly upon which the tire beads are seated
Rim diameter (Wheel diameter)	nominal diameter of the bead seat
Rim size designation	rim diameter and width
Rim type designation	the industry of manufacturer’s designation for a rim by style or code
Rim width	nominal distance between rim flanges
Vehicle capacity weight (Total load capacity)	the rated cargo and luggage load plus 68 kg (150 lb.) times the vehicle’s designated seating capacity
Vehicle maximum load on the tire	the load on an individual tire that is determined by distributing to each axle its share of the maximum loaded vehicle weight and dividing by two

Tire related term	Meaning
Vehicle normal load on the tire	the load on an individual tire that is determined by distributing to each axle its share of the curb weight, accessory weight, and normal occupant weight (distributed in accordance with Table 1 that follows) and dividing by two
Weather side	the surface area of the rim not covered by the inflated tire

Table 1—Occupant loading and distribution for vehicle normal load for various designated seating capacities

Designated seating capacity, number of occupants	Vehicle normal load, number of occupants	Occupant distribution in a normally loaded vehicle
2 through 4	2	2 in front
5 through 10	3	2 in front, 1 in second seat

Vehicle load limits

Vehicle load limits include total load capacity, seating capacity, towing capacity and cargo capacity. Follow the load limits shown below. Total load capacity and seating capacity are also described on the tire and loading information label. For location of the tire and loading information label, see “Checking tire inflation pressure” on page 381.

Total load capacity:

With 5 occupants:
431 kg (950 lb.)
With 7 occupants:
476 kg (1050 lb.)

Total load capacity means combined weight of occupants, cargo and luggage. Tongue load is included when trailer towing.

Seating capacity:

Without third seats:
Total 5 (Front 2, Rear 3)
With third seats:
Total 7 (Front 2, Rear 5)

Seating capacity means the maximum number of occupants whose estimated average weight is 68 kg (150 lb.) per person. Depending on the weight of each person, the seating capacity given may exceed the total load capacity.

NOTICE
Even if the number of occupants are within the seating capacity, do not exceed the total load capacity.

Towing capacity:

For weight carrying hitch
2268 kg (5000 lb.)

Also for weight distributing hitch

1GR–FE engine
Two–wheel drive models
3042 kg (6700 lb.)
Four–wheel drive models
2906 kg (6400 lb.)

2UZ–FE engine
Two–wheel drive models
3311 kg (7300 lb.)
Four–wheel drive models
3175 kg (7000 lb.)

Towing capacity means the maximum gross trailer weight (trailer weight plus its cargo weight) that your vehicle is able to tow.

Cargo capacity

Cargo capacity may increase or decrease depending on the size (weight) and the number of occupants. For details, see “Capacity and distribution” that follows.

⚠ CAUTION

Do not apply the load more than each load limit. That may cause not only damage to the tires, but also deterioration to the steering ability and braking ability, which may cause an accident.

Cargo and luggage— —Stowage precautions

When stowing cargo and luggage in the vehicle, observe the following:

- Put cargo and luggage in the luggage compartment when at all possible. Be sure all items are secured in place.
- Be careful to keep the vehicle balanced. Locating the weight as far forward as possible helps maintain balance.
- For better fuel economy, do not carry unneeded weight.

⚠ CAUTION

- **To prevent cargo and luggage from sliding forward during braking, do not stack anything in the luggage compartment higher than the seatbacks. Keep cargo and luggage low, as close to the floor as possible.**
- **Do not store more than 91 kg (200 lb.) of cargo and luggage in the luggage compartment. If the third seats are occupied, do not store cargo and luggage in the luggage compartment.**
- **Do not place anything on the flattened seat or it may slide forward during braking.**
- **Never allow anyone to ride in the luggage compartment. It is not designed for passengers. They should ride in their seats with their seat belts properly fastened. Otherwise, they are much more likely to suffer serious bodily injury, in the event of sudden braking or a collision.**

- **Do not place anything on the luggage cover. Such items may be thrown about and possibly injure people in the vehicle during sudden braking or an accident. Secure all items in a safe place.**
- **Do not drive with objects left on top of the instrument panel. They may interfere with the driver’s field of view. Or they may move during sharp vehicle acceleration or turning, and impair the driver’s control of the vehicle. In an accident they may injure the vehicle occupants.**

—Capacity and distribution

Cargo capacity depends on the total weight of the occupants.

(Cargo capacity) = (Total load capacity) – (Total weight of occupants)

STEPS FOR DETERMINING CORRECT LOAD LIMIT

1. Locate the statement “The combined weight of occupants and cargo should never exceed XXX pounds” on your vehicle’s placard.
2. Determine the combined weight of the driver and passengers that will be riding in your vehicle.
3. Subtract the combined weight of the driver and passengers from XXX kilograms or XXX pounds.
4. The resulting figure equals the available amount of cargo and luggage load capacity. For example, if the “XXX” amount equals 1400 lbs. and there will be five 150 lb. passengers in your vehicle, the amount of available cargo and luggage load capacity is 650 lbs. (1400–750 (5x150)=650 lbs).
5. Determine the combined weight of luggage and cargo being loaded on the vehicle. That weight may not safely exceed the available cargo and luggage load capacity calculated in Step 4.
6. If your vehicle will be towing a trailer, load from your trailer will be transferred to your vehicle. Consult this manual to determine how this reduces the available cargo and luggage load capacity of your vehicle.

For details about trailer towing, see page 316.

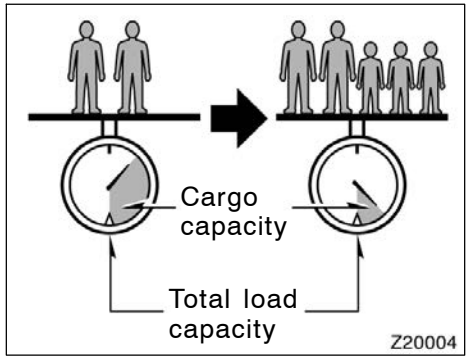

EXAMPLE ON YOUR VEHICLE

In case that 2 people with the combined weight of 166 kg (366 lb.) are riding in your vehicle with the total load capacity of 431 kg (950 lb.), the available amount of cargo and luggage load capacity will be as follows:

With 5 occupants:
431 kg – 166 kg = 265 kg.
(950 lb. – 366 lb. = 584 lb.)

With 7 occupants:
476 kg – 166 kg = 310 kg.
(1050 lb. – 366 lb. = 684 lb.)

From this condition, if 3 more passengers with the combined weight of 176 kg (388 lb.) get on, the available cargo and luggage load will be reduced as follows:

With 5 occupants:
265 kg – 176 kg = 89 kg.
(584 lb. – 388 lb. = 196 lb.)

With 7 occupants:
310 kg – 176 kg = 134 kg.
(683 lb. – 388 lb. = 295 lb.)

As shown in the above example, if the number of occupants increases, the cargo and luggage load equaling the combined weight of occupants who got on later must be reduced. In other words, if the increase in the number of occupants causes the excess of the total load capacity (combined weight of occupants plus cargo and luggage load), you have to reduce the cargo and luggage on your vehicle.

For details about total load capacity, see “Vehicle load limits” on page 304.

⚠ CAUTION

Even if the total load of occupant’s weight and the cargo load is less than the total load capacity, do not apply the load unevenly. That may cause not only damage to the tire but also deterioration to the steering ability due to unbalance of the vehicle, causing an accident.

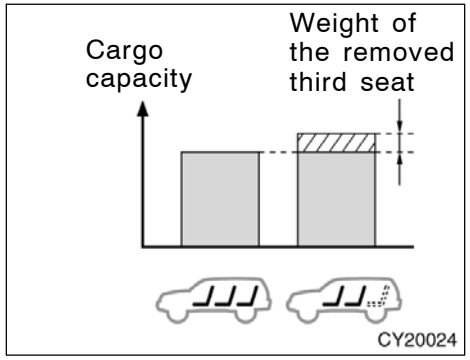

SEATING CONFIGURATION VARIATION

In case of removing the rear seats, it is possible to load as much cargo as the weight of the removed seats.

(Cargo capacity) = (Total load capacity) – (Total weight of occupants) + (Weight of the removed rear seats)

Rear seats weights:
Each seat 11 kg (24 lb.)

Types of tires

Determine what kind of tires your vehicle is originally equipped with.

1. Summer tires

Summer tires are high–speed capability tires best suited to highway driving under dry conditions.

Since summer tires do not have the same traction performance as snow tires, summer tires are inadequate for driving on snow–covered or icy roads. For driving on snow–covered or icy roads, we recommend using snow tires. If installing snow tires, be sure to replace all four tires.

2. All season tires

All season tires are designed to provide better traction in snow and to be adequate for driving in most winter conditions, as well as for use all year round.

All season tires, however, do not have adequate traction performance compared with snow tires in heavy or loose snow. Also, all season tires fall short in acceleration and handling performance compared with summer tires in highway driving.

The details about how to distinguish summer tires from all season tires are described on page 296.

⚠ CAUTION

- **Do not mix summer and all season tires on your vehicle as this can cause dangerous handling characteristics, resulting in loss of control.**
- **Do not use tire other than the manufacturer’s designated tires, and never mix tires or wheels of the sizes different from the originals.**

SECTION 3

STARTING AND DRIVING

Before starting the engine 310
How to start the engine 310
Tips for driving in various conditions 311
Off–road driving precautions 313
Winter driving tips 314
Dinghy towing 315
Trailer towing 316
How to save fuel and make your vehicle last longer 326

Before starting the engine

1. Check the area around the vehicle before entering it.
2. Adjust seat position, seatback angle, seat cushion angle, head restraint height and steering wheel angle.
3. Adjust the inside and outside rear view mirrors.
4. Lock all doors.
5. Fasten seat belts.

How to start the engine——Cranking hold function

Once you turn the ignition key to “START” position and release it, the cranking hold function continues to crank the engine in “ON” position until it starts.

The function stops cranking the engine after about 25 seconds maximum if the engine has not started yet. When you crank the engine again, wait a few seconds and restart it.

If you hold the key in “START” position, the function will keep cranking for about 30 seconds maximum.

(a) Before cranking

1. Apply the parking brake firmly.
2. Turn off unnecessary lights and accessories.
3. Put the selector lever in “P”. If you need to restart the engine while the vehicle is moving, put the selector lever in “N”. A starter safety device will prevent the starter from operating if the selector lever is in any drive position.
4. Depress the brake pedal and hold it to the floor until driving off.

(b) Starting the engine

Before starting the engine, be sure to follow the instructions in “(a) Before cranking”.

Normal starting procedure

The multiport fuel injection system/sequential multiport fuel injection system in your engine automatically controls the proper air–fuel mixture for starting. You can start a cold or hot engine as follows:

With your foot off the accelerator pedal, turn the ignition key to “START” position, then release it.

Engine should be warmed up by driving, not in idle. For warming up, drive with smoothly turning engine until engine coolant temperature is within normal range.

If the engine stalls...

Simply restart it, using the correct procedure given in normal starting.

If the engine will not start...

See “If your vehicle will not start” on page 330 in Section 4.

NOTICE

- ***Do not race a cold engine.***
- ***If the engine becomes difficult to start or stalls frequently, have the engine checked immediately.***

Tips for driving in various conditions

- Always slow down in gusty crosswinds. This will allow you much better control.
- Drive slowly onto curbs and, if possible, at a right angle. Avoid driving onto high, sharp–edged objects and other road hazards. Failure to do so can lead to severe tire damage such as a tire burst.

  Drive slowly when passing over bumps or travelling on a bumpy road. Otherwise, the impact could cause severe damage to the tires and/or wheels.
- When parking on a hill, turn the front wheels until they touch the curb so that the vehicle will not roll. Apply the parking brake, and place the transmission in “P”. If necessary, block the wheels.
- Washing your vehicle or driving through deep water may get the brakes wet. To see whether they are wet, check that there is no traffic near you, and then press the pedal lightly. If you do not feel a normal braking force, the brakes are probably wet. To dry them, drive the vehicle cautiously while lightly pressing the brake pedal with the parking brake applied. If they still do not work safely, pull to the side of the road and call a Toyota dealer for assistance.

- Vehicles with rear height control air suspension: When you drive on a bumpy road, it is recommended that the vehicle height should be set in the “N” (normal) or “H” (high) mode.

CAUTION

- **Before driving off, make sure that the parking brake is fully released and the parking brake reminder light is off.**
- **Do not leave your vehicle unattended while the engine is running.**
- **Do not rest your foot on the brake pedal while driving. It can cause dangerous overheating, needless wear, and poor fuel economy.**
- **To drive down a long or steep hill, reduce your speed and downshift. Remember, if you ride the brakes excessively, they may overheat and not work properly.**
- **Be careful when accelerating, upshifting, downshifting or braking on a slippery surface. Sudden acceleration or engine braking, could cause the vehicle to skid or spin.**
- **Do not drive in excess of the speed limit. Even if the legal speed limit permits it, do not drive over 140 km/h (85 mph) unless your vehicle has high−speed capability tires. Driving over 140 km/h (85 mph) may result in tire failure, loss of control and possible injury. Be sure to consult a tire dealer to determine whether the tires on your vehicle are high−speed capability tires or not before driving at such speeds.**
- **Do not continue normal driving when the brakes are wet. If they are wet, your vehicle will require a longer stopping distance, and it may pull to one side when the brakes are applied. Also, the parking brake will not hold the vehicle securely.**
- **Vehicles with rear height control air suspension: If you drive through deep water over about 700 mm (28 in.) in depth, put the vehicle height in the “H” (high) mode with the height select switch and then turn off the rear height control air suspension by pushing the “HEIGHT CONTROL OFF” switch. Drive your vehicle at 30 km/h (19 mph) or lower speed.**

Off–road driving precautions

When driving your vehicle off–road, please observe the following precautions to ensure your driving enjoyment and to help prevent the closure of areas to off–road vehicles.

a. Drive your vehicle only in areas where off–road vehicles are permitted to travel.

b. Respect private property. Get owner’s permission before entering private property.

c. Do not enter areas that are closed. Honor gates, barriers and signs that restrict travel.

d. Stay on established roads. When conditions are wet, driving techniques should be changed or travel delayed to prevent damage to roads.

For owners in U.S. mainland, Hawaii and Puerto Rico:

To obtain additional information pertaining to driving your vehicle off–road, consult the following organizations.

- State and Local Parks and Recreation Departments
- State Motor Vehicle Bureau
- Recreational Vehicle Clubs
- U.S. Forest Service and Bureau of Land Management

⚠ CAUTION

Always observe the following precautions to minimize the risk of serious personal injury or damage to your vehicle:

- **Drive carefully when off the road. Do not take unnecessary risks by driving in dangerous places.**
- **Do not grip the steering wheel spokes when driving off–road. A bad bump could jerk the wheel and injure your hands. Keep both hands and especially your thumbs on the outside of the rim.**
- **Always check your brakes for effectiveness immediately after driving in sand, mud, water or snow.**
- **After driving through tall grass, mud, rock, sand, rivers, etc., check that there is no grass, bush, paper, rags, stone, sand, etc. adhering or trapped on the underbody. Clear off any such matter from the underbody. If the vehicle is used with these materials trapped or adhering to the underbody, a breakdown or fire could occur.**
- **In a rollover crash, an unbelted person is significantly more likely to die than a person wearing a seat belt. Therefore, the driver and all passengers should fasten their seat belts whenever the vehicle is moving.**
- **When driving off–road or in rugged terrain, do not drive at excessive speeds, jump, make sharp turns, strike objects, etc. This may cause loss of control or vehicle rollover causing death or serious injury. You are also risking expensive damage to your vehicle’s suspension and chassis.**

NOTICE

- ***If driving through water, such as when crossing shallow streams, first check the depth of the water and the bottom of the river bed for firmness. Drive slowly and avoid deep water.***
- ***Take all necessary safety measures to ensure that water damage to the engine or other components does not occur.***

  Water entering the engine air intake will cause severe engine damage.

  Water can wash the grease from wheel bearings, causing rusting and premature failure, and may also enter the differentials, transmission and transfer case, reducing the gear oil’s lubricating qualities.
- ***Sand and mud that has accumulated in brake drums and around brake discs may affect braking efficiency and may damage brake system components.***

- ***Always perform a maintenance inspection after each day of off–road driving that has taken you through rough terrain, sand, mud, or water. For scheduled maintenance information, refer to the “Scheduled Maintenance Guide” or “Owner’s Manual Supplement”.***

Winter driving tips

Make sure your coolant is properly protected against freezing.

Only use “Toyota Super Long Life Coolant” or similar high quality ethylene glycol based non–silicate, non–amine, non–nitrite, and non–borate coolant with long–life hybrid organic acid technology. (Coolant with long–life hybrid organic acid technology is a combination of low phosphates and organic acids.)

See “Checking the engine coolant level” on page 378 in Section 7–2 for details of coolant type selection.

For the U.S.A.—“Toyota Super Long Life Coolant” is a mixture of 50% coolant and 50% deionized water. This coolant provides protection down to about –35°C (–31°F).

For the Canada—“Toyota Super Long Life Coolant” is a mixture of 55% coolant and 45% deionized water. This coolant provides protection down to about –42°C (–44°F).

NOTICE

Do not use plain water alone.

Check the condition of the battery and cables.

Cold temperatures reduce the capacity of any battery, so it must be in top shape to provide enough power for winter starting. Section 7–3 tells you how to visually inspect the battery. Your Toyota dealer and most service stations will be pleased to check the level of charge.

Make sure the engine oil viscosity is suitable for the cold weather.

See page 376 in Section 7–2 for recommended viscosity. Leaving a heavy summer oil in your vehicle during winter months may cause harder starting. If you are not sure about which oil to use, call your Toyota dealer—they will be pleased to help.

Keep the door locks from freezing.

Squirt lock de–icer or glycerine into the locks to keep them from freezing.

Use a washer fluid containing an antifreeze solution.

This product is available at your Toyota dealer and most auto parts stores. Follow the manufacturer’s directions for how much to mix with water.

NOTICE

Do not use engine antifreeze or any other substitute because it may damage your vehicle’s paint.

Do not use your parking brake when there is a possibility it could freeze.

When parking, put the transmission into “P” and block the front wheels. Do not use the parking brake, or snow or water accumulated in and around the parking brake mechanism may freeze, making it hard to release.

Keep ice and snow from accumulating under the fenders.

Ice and snow built up under your fenders can make steering difficult. During bad winter driving, stop and check under the fenders occasionally.

Depending on where you are driving, we recommend you carry some emergency equipment.

Some of the things you might put in the vehicle are tire chains, window scraper, bag of sand or salt, flares, small shovel, jumper cables, etc.

Dinghy towing

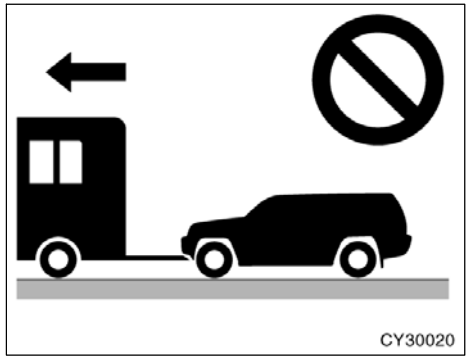

Your vehicle is not designed to be dinghy towed (with four wheels on the ground) behind a motorhome.

NOTICE

Do not tow your vehicle with four wheels on the ground. This may cause serious damage to your vehicle.

Trailer towing

Your vehicle is designed primarily as a passenger–and–load–carrying vehicle. Towing a trailer will have an adverse effect on handling, performance, braking, durability and driving economy (fuel consumption, etc.). Your safety and satisfaction depend on the proper use of correct equipment and cautious driving habits. For your safety and the safety of others, you must not overload your vehicle or trailer. Ask your local Toyota dealer for further details before towing.

⚠ CAUTION

Vehicles with rear height control air suspension: When disconnecting a trailer, put the vehicle height in the “LO” (low) mode and push the “HEIGHT CONTROL OFF” switch to turn off the rear height control air suspension. Otherwise, the vehicle height may be changed in the automatic leveling function, resulting in accident. For details see “Rear height control air suspension” on page 182 in Section 1–7.

WEIGHT LIMITS

Before towing, make sure the total trailer weight, gross combination weight, gross vehicle weight, gross axle weight and trailer tongue load are all within the limits.

The total trailer weight and tongue load can be measured with platform scales found at a highway weighing station, building supply company, trucking company, junk yard, etc.

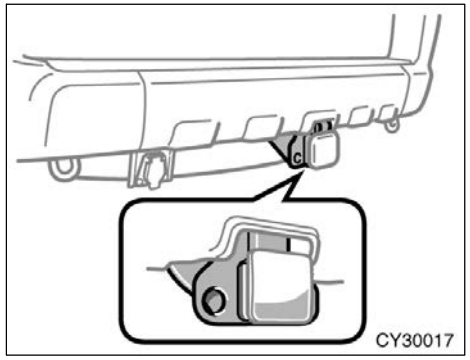

For weight carrying hitch (type A)

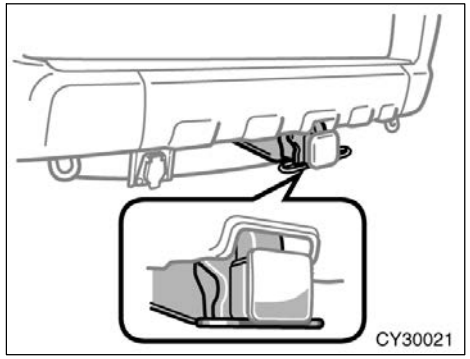

For weight carrying hitch (type B)

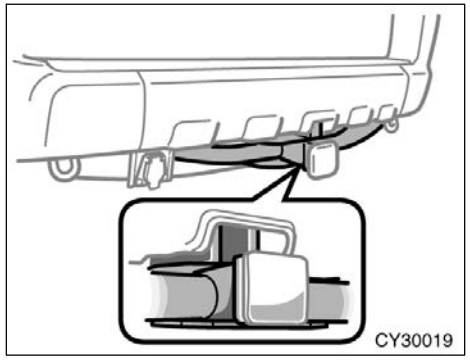

Also for weight distributing hitch

CAUTION

- The maximum gross trailer weight (trailer weight plus cargo weight) must never exceed the following for vehicle with equipped. For details, contact your Toyota dealer.
- According to the hitch receiver type, the maximum gross trailer weight and hitch that can be used differs. Refer to the above illustrations to confirm the hitch receiver type for your vehicle.

  For weight carrying hitch
  2268 kg (5000 lb.)

  Also for weight distributing hitch

  1GR−FE engine
  Two−wheel drive models
  3042 kg (6700 lb.)
  Four−wheel drive models
  2906 kg (6400 lb.)

  2UZ−FE engine
  Two−wheel drive models
  3311 kg (7300 lb.)
  Four−wheel drive models
  3175 kg (7000 lb.)

If towing a trailer and cargo weighing over 2268 kg (5000 lb.), Toyota recommends to use a weight distributing hitch.

If towing a trailer and cargo weighing over 907 kg (2000 lb.), it is necessary to use a sway control device with sufficient capacity. The combination of the gross trailer weight added to the total weight of the vehicle, occupants and vehicle cargo must never exceed a total of the following.

For weight carrying hitch
1GR−FE engine
4354 kg (9600 lb.)
2UZ−FE engine
4422 kg (9750 lb.)

Also for weight distributing hitch
1GR−FE engine
5039 kg (11100 lb.)
2UZ−FE engine
5443 kg (12000 lb.)

Exceeding the maximum weight of the trailer, the vehicle, or the vehicle and trailer combination, can cause an accident resulting in serious personal injuries.

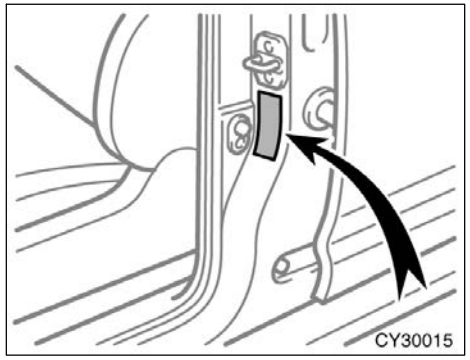

- **Trailer hitch assemblies have different weight capacities established by the hitch manufacturer. Even though the vehicle may be physically capable of towing a higher weight, the operator must determine the maximum weight rating of the particular hitch assembly and never exceed the maximum weight rating specified for the trailer−hitch. Exceeding the maximum weight rating set by the trailer hitch manufacturer can cause an accident resulting in serious personal injuries.**

- **The gross vehicle weight must not exceed the Gross Vehicle Weight Rating (GVWR) indicated on the Certification Label. The gross vehicle weight is the sum of weights of the unloaded vehicle, driver, passengers, luggage, hitch and trailer tongue load. It also includes the weight of any special equipment installed on your vehicle.**
- **The load on either the front or rear axle resulting from distribution of the gross vehicle weight on both axles must not exceed the front and rear Gross Axle Weight Ratings (GAWR) listed on the Certification Label.**

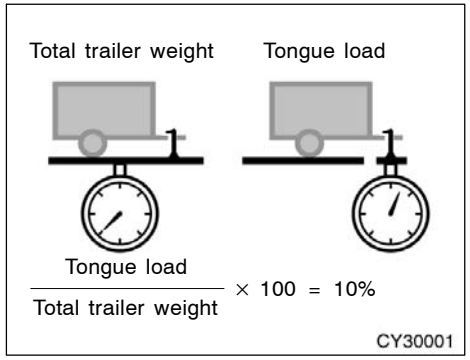

- **The trailer cargo load should be distributed so that the tongue load is 10% of the total trailer weight, not exceeding the maximum load of the following.**

  For weight carrying hitch
  227 kg (500 lb.)

Also for weight distributing hitch

1GR−FE engine
Two−wheel drive models
304 kg (670 lb.)
Four−wheel drive models
290 kg (640 lb.)

2UZ−FE engine
Two−wheel drive models
331 kg (730 lb.)
Four−wheel drive models
317 kg (700 lb.)

Never load the trailer with more weight in the back than in the front. About 60% of the trailer load should be in the front half of the trailer and the remaining 40% in the rear.

HITCHES

- If you wish to install a trailer hitch, you should consult with your Toyota dealer.
- Use only a hitch recommended by the hitch manufacturer and the one which conforms to the total trailer weight requirement.
- According to the hitch receiver type, the maximum gross trailer weight and hitch that can be used differs. Refer to the above illustrations to confirm the hitch receiver type for your vehicle.
- If you wish to install an aftermarket hitch, the hitch must be bolted securely to the vehicle frame and installed according to the hitch manufactures’ instructions.
- The hitch ball and king pin should have a light coat of grease.
- Toyota recommends the ball mount assembly be removed when not towing to prevent injury and to prevent damage in the event of a rear end collision. After removing the ball mount assembly, install the grommet to the hitch to prevent entry of dirt and mud.

⚠ CAUTION

Do not tow the vehicle using the hooked portion of the weight carrying hitch. The hooked portion may break and cause serious injury or damage to the vehicle.

NOTICE

- ***Do not install weight distributing hitch to weight carrying hitch receiver because it will be damaged your vehicle.***
- ***Do not use axle−mounted hitches as they can cause damage to the axle housing, wheel bearings, wheels or tires. Also, never install a hitch which may interfere with the normal function of an Energy Absorbing Bumper, if so equipped.***

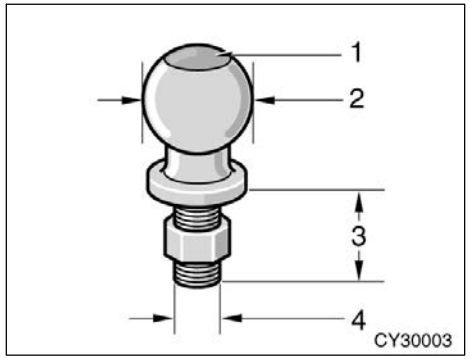

1 Trailer ball load rating
2 Ball diameter
3 Shank length
4 Shank diameter

TRAILER BALL

Follow these easy steps to properly determine the correct trailer ball for your application:

1. Determine the correct trailer ball size for the trailer coupler. Most couplers are stamped with the required trailer ball size. The sizes you will most likely find stamped on the coupler are:

Trailer class	Typical trailer ball size
IV	2 5/16 in.
II and III	2 in.
I	1 7/8 in.

2. Select the appropriate trailer ball to match or exceed the gross trailer weight rating of the trailer. The trailer ball load rating should be printed on the top of the ball.
3. When mounted in the ball mount, the threaded ball shank must protrude beyond the bottom of the lock washer and nut at least 2 threads. The trailer ball shank must be matched to the ball mount hole diameter size.

NOTICE

Only use a ball mount attachment specified for the Toyota 4runner.

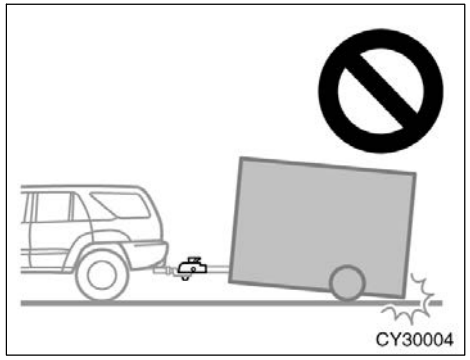

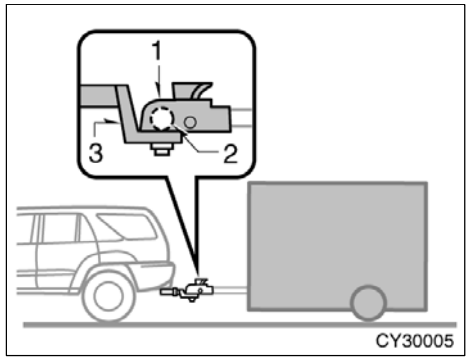

1 Coupler
2 Trailer ball
3 Ball mount attachment

MATCHING TRAILER BALL HEIGHT TO TRAILER COUPLER HEIGHT

No matter which class of tow hitch applies, for a safe trailer hookup, the trailer ball setup on must be the proper height for the coupler on the trailer.

BRAKES AND SAFETY CHAINS

- **Toyota recommends trailers with brakes that conform to any applicable federal and state/provincial regulations.**
- **A safety chain must always be used between the towing vehicle and the trailer. Leave sufficient slack in the chain for turns. The chain should cross under the trailer tongue to prevent the tongue from dropping to the ground in case it becomes damaged or separated. For correct safety chain procedures, follow the hitch or trailer manufacturer’s recommendations.**

⚠ CAUTION

- **If the total trailer weight exceeds 453 kg (1000 lb.), trailer brakes are required.**
- **Never tap into your vehicle’s hydraulic system as it would lower its braking effectiveness.**
- **Never tow a trailer without using a safety chain securely attached to both the trailer and the vehicle. If damage occurs to the coupling unit or hitch ball, there is danger of the trailer wandering over into another lane.**

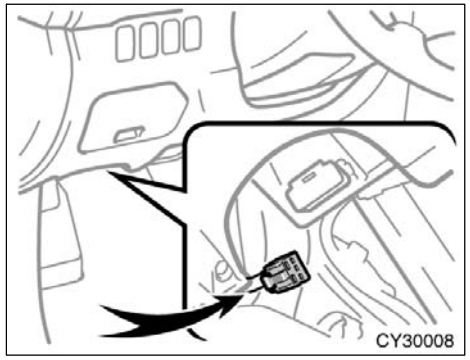

SERVICE CONNECTOR FOR TOWING BRAKE CONTROLLER

Your vehicle is equipped with a service connector for the towing brake controller as shown. Link the connector to the towing brake controller via the sub wire harness stored in the glove box. The detailed explanation of the sub wire harness circuit is packed together with the sub wire harness.

Be sure to position the towing brake controller where it does not prevent the driver from operating the pedal.

Toyota recommends that the sub wire harness be stored in the glove box when it is not in use.

TIRES

- Ensure that your vehicle’s tires are properly inflated. See page 381 in Section 7–2 and page 406 in Section 8 for instructions.
- The trailer tires should be inflated to the pressure recommended by the trailer manufacturer in respect to the total trailer weight.

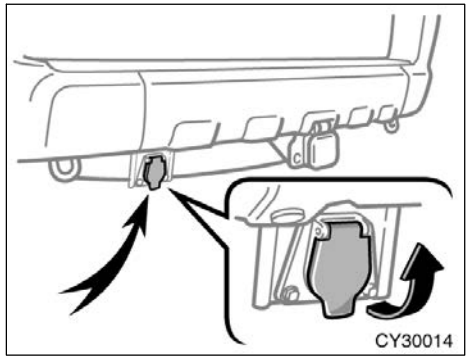

TOWING CONNECTOR FOR TRAILER LIGHTS

- Your vehicle is equipped with a wire harness stored in the rear end under body. Some models are fitted with a socket for trailer lights under the rear bumper. Use either of them to connect and operate the trailer lights. However, the trailer lights must comply with federal, state/provincial and local regulations. See your local recreational vehicle dealer or rental agency for the correct type of wiring and relays for your trailer. Check for correct operation of the turn signals and stop lights each time you hitch up. Direct splicing may damage your vehicle’s electrical system and cause a malfunction of your lights.

  The towing connector can be also connected to the trailer brake and trailer sub battery.

BREAK–IN SCHEDULE

- Toyota recommends that you do not tow a trailer with a new vehicle or a vehicle with any new power train component (engine, transmission, differential, wheel bearing, etc.) for the first 800 km (500 miles) of driving.

MAINTENANCE

- If you tow a trailer, your vehicle will require more frequent maintenance due to the additional load. For this information, please refer to the scheduled maintenance information in the “Scheduled Maintenance Guide” or “Owner’s Manual Supplement”.
- Retighten all fixing bolts of the towing ball and bracket after approximately 1000 km (600 miles) of trailer driving.

CONNECTING A TRAILER (models with rear height control air suspension)

Stop your vehicle and a trailer in line and perform the following:

1. Put the rear height control air suspension in the “LO” (low) mode. Turn the ignition switch off or push the “HEIGHT CONTROL OFF” switch to turn off the rear height control air suspension.
2. Connect a trailer.
3. Turn the ignition switch on or push the “HEIGHT CONTROL OFF” switch to turn on the rear height control air suspension. Select the “N” (normal) mode with the height select switch.

DISCONNECTING A TRAILER (models with rear height control air suspension)

Stop your vehicle and a trailer in line and perform the following:

1. Put the rear height control air suspension in the “LO” (low) mode. (Make sure the vehicle height is in the “LO” (low) mode by pushing the height select switch on the “∨” side.)
2. Turn the ignition switch off or push the “HEIGHT CONTROL OFF” switch to turn off the rear height control air suspension.
3. Set the supporting leg of a trailer on the ground and raise the hitch by 100 mm (4 in.).
4. Turn the ignition switch on or push the “HEIGHT CONTROL OFF” switch to turn on the rear height control air suspension.
5. Wait for about 20 seconds until the rear vehicle height is lowered by the automatic leveling function.
6. Make sure the hitch is disconnected. If not, raise the hitch higher and repeat steps 2 through 5.
7. Move the vehicle forward in the “LO” (low) mode where the hitch does not touch anything in the “N” (normal) mode.
8. Put the rear height control air suspension in the “N” (normal) mode.

PRE−TOWING SAFETY CHECK

- Check that your vehicle remains level when a loaded or unloaded trailer is hitched. Do not drive if the vehicle has an abnormal nose−up or nose−down condition, and check for improper tongue load, overload, worn suspension or other possible causes.
- Make sure the trailer cargo is securely loaded so that it cannot shift.
- Check that your rear view mirrors conform to any applicable federal, state/provincial or local regulations. If not, install the rear view mirrors required for towing purpose.

TRAILER TOWING TIPS

When towing a trailer, your vehicle will handle differently than when not towing. The three main causes of vehicle–trailer accidents are driver error, excessive speed and improper trailer loading. Keep these in mind when towing:

- Before starting out, check operation of the lights and all vehicle–trailer connections. After driving a short distance, stop and recheck the lights and connections. Before actually towing a trailer, practice turning, stopping and backing with a trailer in an area away from traffic until you learn the feel.
- Backing with a trailer is difficult and requires practice. Grip the bottom of the steering wheel and move your hand to the left to move the trailer to the left. Move your hand to the right to move the trailer to the right. (This procedure is generally opposite to that when backing without a trailer.) Also, just turn the steering wheel a little at a time, avoiding sharp or prolonged turning. Have someone guide you when backing to reduce the risk of an accident.
- Because stopping distance may be increased, vehicle–to–vehicle distance should be increased when towing a trailer. For each 16 km/h (10 mph) of speed, allow at least one vehicle and trailer length between you and the vehicle ahead. Avoid sudden braking as you may skid, resulting in jackknifing and loss of control. This is especially true on wet or slippery surfaces.
- Avoid jerky starts or sudden acceleration.
- Avoid jerky steering and sharp turns. The trailer could hit your vehicle in a tight turn. Slow down before making a turn to avoid the necessity of sudden braking.
- Remember that when making a turn, the trailer wheels will be closer than the vehicle wheels to the inside of the turn. Therefore, compensate for this by making a larger than normal turning radius with your vehicle.
- Crosswinds and rough roads will adversely affect handling of your vehicle and trailer, causing sway. Pay attention to the rear from time to time to prepare yourself for being passed by large trucks or buses, which may cause your vehicle and trailer to sway. If swaying happens, firmly grip the steering wheel and reduce speed immediately but gradually. Never increase speed. Steer straight ahead. If you make no extreme correction with the steering or brakes, the vehicle and trailer will stabilize.
- Be careful when passing other vehicles. Passing requires considerable distance. After passing a vehicle, do not forget the length of your trailer and be sure you have plenty of room before changing lanes.
- In order to maintain engine braking efficiency, do not put the transmission in “D”.

- Because of the added load of the trailer, your vehicle’s engine may overheat on hot days (at temperatures over 30°C [85°F]) when going up a long or steep grade with a trailer. If the engine coolant temperature gauge indicates overheating, immediately turn off the air conditioning (if in use), pull off the road and stop in a safe spot. Refer to “If your vehicle overheats” on page 334 in Section 4.
- Always place wheel blocks under both the vehicle and trailer wheels when parking. Apply the parking brake firmly. Put the transmission in “P”. Avoid parking on a slope with a trailer, but if it cannot be avoided, do so only after performing the following:

1. Apply the brakes and hold.
2. Have someone place wheel blocks under both the vehicle and trailer wheels.
3. When the wheel blocks are in place, release your brakes slowly until the blocks absorb the load.
4. Apply the parking brake firmly.
5. Shift into “P” and turn off the engine.

When restarting out after parking on a slope:

1. With the transmission in “P” position, start the engine. Be sure to keep the brake pedal depressed.
2. Shift into gear.
3. Release the parking brake and brake pedal and slowly pull or back away from the wheel blocks. Stop and apply your brakes.
4. Have someone retrieve the blocks.

⚠ CAUTION

- **Do not exceed 72 km/h (45 mph) or the posted towing speed limit, whichever is lower. Because instability (swaying) of a towing vehicle–trailer combination usually increases as the speed increases, exceeding 72 km/h (45 mph) may cause loss of control.**

- **Slow down and downshift before descending steep or long downhill grades. Do not make sudden downshifts.**
- **Avoid holding the brake pedal down too long or too frequently. This could cause the brakes to overheat and result in reduced braking efficiency.**

How to save fuel and make your vehicle last longer

Improving fuel economy is easy—just take it easy. It will help make your vehicle last longer, too. Here are some specific tips on how to save money on both fuel and repairs:

- **Keep your tires inflated at the correct pressure.** Underinflation causes tire wear and wastes fuel. See page 381 in Section 7–2 for instructions.
- **Do not carry unneeded weight in your vehicle.** Excess weight puts a heavier load on the engine, causing greater fuel consumption.
- **Avoid lengthy warm–up idling.** Once the engine is running smoothly, begin driving—but gently. Remember, however, that on cold winter days this may take a little longer.
- **Put the selector lever into the “D” when engine braking is not required.**

  Driving with the selector lever in “4” will reduce the fuel economy. (For details, see “Automatic transmission” on page 157 in Section 1–7.)
- **Accelerate slowly and smoothly.** Avoid jackrabbit starts. Get into high gear as quickly as possible.
- **Avoid long engine idling.** If you have a long wait and you are not in traffic, it is better to turn off the engine and start again later.
- **Avoid engine lugging or over–revving.** Use a gear position suitable for the road on which you are travelling.
- **Avoid continuous speeding up and slowing down.** Stop–and–go driving wastes fuel.
- **Avoid unnecessary stopping and braking. Maintain a steady pace.** Try to time the traffic signals so you only need to stop as little as possible or take advantage of through streets to avoid traffic lights. Keep a proper distance from other vehicles to avoid sudden braking. This will also reduce wear on your brakes.
- **Avoid heavy traffic or traffic jams whenever possible.**
- **Do not rest your foot on the brake pedal.** This causes premature wear, overheating and poor fuel economy.
- **Maintain a moderate speed on highways.** The faster you drive, the greater the fuel consumption. By reducing your speed, you will cut down on fuel consumption.
- **Keep the front wheels in proper alignment.** Avoid hitting the curb and slow down on rough roads. Improper alignment not only causes faster tire wear but also puts an extra load on the engine, which, in turn, wastes fuel.
- **Keep the bottom of your vehicle free from mud, etc.** This not only lessens weight but also helps prevent corrosion.
- **Keep your vehicle tuned–up and in top shape.** A dirty air cleaner, improper valve clearance, dirty plugs, dirty oil and grease, brakes not adjusted, etc. all lower engine performance and contribute to poor fuel economy. For longer life of all parts and lower operating costs, keep all maintenance work on schedule, and if you often drive under severe conditions, see that your vehicle receives more frequent maintenance. (For scheduled maintenance information, please refer to the “Scheduled Maintenance Guide” or “Owner’s Manual Supplement”.)

⚠ CAUTION

Never turn off the engine to coast down hills. Your power steering and brake booster will not function without the engine running. Also, the emission control system operates properly only when the engine is running.

SECTION 4

IN CASE OF AN EMERGENCY

If your vehicle will not start 330
If your engine stalls while driving 333
If you cannot increase engine speed 334
If your vehicle overheats 334
If you have a flat tire 335
If your vehicle becomes stuck 345
If your vehicle needs to be towed 345
If you cannot shift automatic transmission selector lever 350
If you lose your keys 351
If you lose your wireless remote control transmitter 351

If your vehicle will not start—
(a) Simple checks

Before making these checks, make sure you have followed the correct starting procedure given in “How to start the engine” on page 310 in Section 3 and that you have sufficient fuel. Also, check whether the other keys will start the engine. If they work, your key may be broken. Have the key checked at your Toyota dealer. If none of your keys work, there may be a malfunction in the immobilizer system. Call your Toyota dealer. (See “Keys” on page 12 in Section 1–2.)

If the engine is not turning over or is turning over too slowly—

1. Check that the battery terminals are tight and clean.
2. If the battery terminals are O.K., switch on the interior light.
3. If the light is out, dim or goes out when the starter is cranked, the battery is discharged. You may try jump starting. See “(c) Jump starting” on page 331 for further instructions.

If the light is O.K., but the engine still will not start, it needs adjustment or repair. Call a Toyota dealer or qualified repair shop.

NOTICE

Do not pull− or push−start the vehicle. It may damage the vehicle or cause a collision when the engine starts. Also the three−way catalytic converter may overheat and become a fire hazard.

If the engine turns over at its normal speed but will not start—

1. Turn the ignition key to “ACC” or “LOCK” and try starting the engine again.
2. If the engine will not start, the engine may be flooded because of repeated cranking. See “(b) Starting a flooded engine” on page 330 for further instructions.
3. If the engine still will not start, it needs adjustment or repair. Call a Toyota dealer or qualified repair shop.

(b) Starting a flooded engine

If the engine will not start, your engine may be flooded because of repeated cranking.

If this happens, turn the ignition key to “START” with the accelerator pedal fully depressed, and hold the key at this position for about 30 seconds. Then the cranking hold function stops cranking automatically, and you can try starting the engine with your foot off the accelerator pedal.

If the engine does not start, wait a few minutes and try again.

If the engine still will not start, it needs adjustment or repair. Call a Toyota dealer or qualified repair shop for assistance.

(c) Jump starting

To avoid serious personal injury and damage to your vehicle which might result from battery explosion, acid burns, electrical burns, or damaged electronic components, these instructions must be followed precisely.

If you are unsure about how to follow this procedure, we strongly recommend that you seek the help of a competent mechanic or towing service.

⚠ CAUTION

- **Batteries contain sulfuric acid which is poisonous and corrosive. Wear protective safety glasses when jump starting, and avoid spilling acid on your skin, clothing, or vehicle.**
- **If you should accidentally get acid on yourself or in your eyes, remove any contaminated clothing and flush the affected area with water immediately. Then get immediate medical attention. If possible, continue to apply water with a sponge or cloth while en route to the medical office.**

- **The gas normally produced by a battery will explode if a flame or spark is brought near. Use only standardized jumper cables and do not smoke or light a match while jump starting.**

NOTICE

The battery used for boosting must be 12 V. Do not jump start unless you are sure that the booster battery is correct.

JUMP STARTING PROCEDURE

1. If the booster battery is installed in another vehicle, make sure the vehicles are not touching. Turn off all unnecessary lights and accessories.

   When boosting, use the battery of matching or higher quality. Any other battery may be difficult to jump start with.

   If jump starting is difficult, charge the battery for several minutes.
2. If required, remove all the vent plugs from the booster and discharged batteries. Lay a cloth over the open vents on the batteries. (This helps reduce the explosion hazard, personal injuries and burns.)
3. If the engine in the vehicle with the booster battery is not running, start it and let it run for a few minutes. During jump starting run the engine at about 2000 rpm with the accelerator pedal lightly depressed.

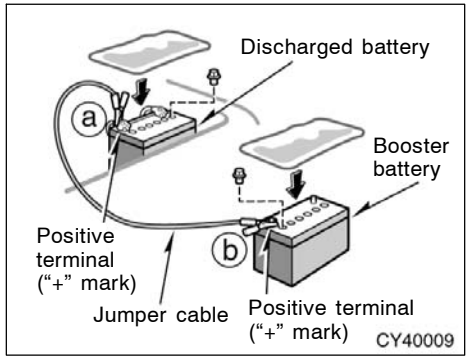

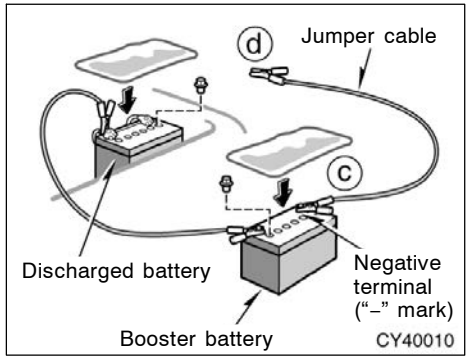

4. Make the cable connections in the order a, b, c, d.

   a. Connect the clamp of the positive (red) jumper cable to the positive (+) terminal on the discharged battery.

   b. Connect the clamp at the other end of the positive (red) jumper cable to the positive (+) terminal on the booster battery.

   c. Connect the clamp of the negative (black) jumper cable to the negative (–) terminal on the booster battery.

   d. Connect the clamp at the other end of the negative (black) jumper cable to a solid, stationary, unpainted, metallic point of the vehicle with the discharged battery.

   The recommended connecting points are shown in the following illustrations:

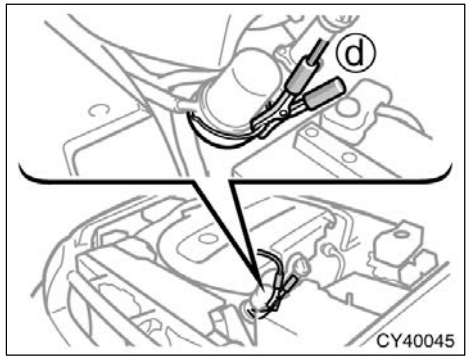

Connecting point for 1GR−FE engine

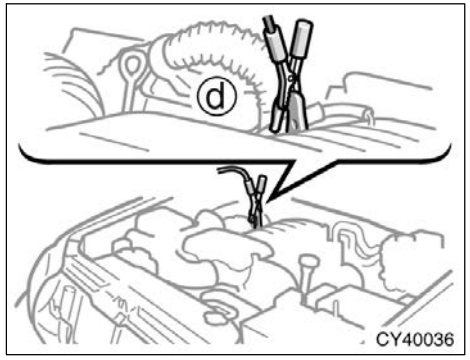

Connecting point for 2UZ−FE engine

Do not connect the cable to or near any part that moves when the engine is cranked.

CAUTION

When making the connections, to avoid serious injury, do not lean over the battery or accidentally let the jumper cables or clamps touch anything except the correct battery terminals or the ground.

5. Charge the discharged battery with the jumper cables connected for approximately 5 minutes. At this time, run the engine in the vehicle with the booster battery at about 2000 rpm with the accelerator pedal lightly depressed.
6. Start your engine in the normal way. After starting, run it at about 2000 rpm for several minutes with the accelerator pedal lightly depressed.
7. Carefully disconnect the cables in the exact reverse order: the negative cable and then the positive cable.
8. Carefully dispose of the battery cover cloths—they may now contain sulfuric acid.
9. If removed, replace all the battery vent plugs.

If the cause of your battery discharging is not apparent (for example, lights left on), you should have it checked at your Toyota dealer.

If the first start attempt is not successful...

Check that the clamp on the jumper cables are tight. Recharge the discharged battery with the jumper cables connected for several minutes and restart your engine in the normal way.

If the another attempt is not successful, the battery may be depleted. Have it checked at your Toyota dealer.

If your engine stalls while driving

If your engine stalls while driving...

1. Reduce your speed gradually, keeping a straight line. Move cautiously off the road to a safe place.
2. Turn on your emergency flashers.
3. Turn the ignition key to “ACC” or “LOCK”, and try starting the engine again.

If the engine will not start, see “If your vehicle will not start” on page 330 in this Section.

CAUTION

If the engine is not running, the power assist for the brakes and steering will not work so steering and braking will be much harder than usual.

If you cannot increase engine speed

If engine speed does not increase when the accelerator pedal is depressed, there may be a problem somewhere in the electronic throttle control system.

At this time, vibration may occur. However, if you depress the accelerator pedal more firmly and slowly, you can drive your vehicle at low speeds. Have your vehicle checked by your Toyota dealer as soon as possible.

Even if the abnormality of the electronic throttle control system is corrected during low speed driving, the system may not be recovered until the engine is stopped and the ignition key is turned to the “ACC” or “LOCK” position.

CAUTION

Be especially careful to prevent erroneous pedal operation.

If your vehicle overheats

If your engine coolant temperature gauge indicates overheating, if you experience a loss of power, or if you hear a loud knocking or pinging noise, the engine has probably overheated. You should follow this procedure...

1. Pull safely off the road, stop the vehicle and turn on your emergency flashers. Put the transmission in “P” and apply the parking brake. Turn off the air conditioning if it is being used.
2. If coolant or steam is boiling out of the radiator or reservoir, stop the engine. Wait until the steam subsides before opening the hood. If there is no coolant boiling over or steam, leave the engine running.

CAUTION

To help avoid personal injury, keep the hood closed until there is no steam. Escaping steam or coolant is a sign of very high pressure.

3. Look for obvious coolant leaks from the radiator, hoses, and under the vehicle. However, note that water draining from the air conditioning is normal if it has been used.

CAUTION

When the engine is running, keep hands and clothing away from the moving fan and engine drive belts.

4. If the engine drive belt is broken or the coolant is leaking, stop the engine immediately. Call a Toyota dealer for assistance.
5. If the engine drive belt is O.K. and there are no obvious leaks, you may help the engine cool down more quickly by running it at about 1500 rpm for a few minutes with the accelerator pedal lightly depressed.
6. Check the coolant reservoir. If it is dry, add coolant to the reservoir while the engine is running. Fill it about half full. For the coolant type, see “Coolant type selection” on page 379 in Section 7–2.

CAUTION

Do not attempt to remove the radiator cap when the engine and radiator are hot. Serious injury could result from scalding hot fluid and steam blown out under pressure.

7. After the engine coolant temperature has cooled to normal, again check the coolant level in the reservoir. If necessary, bring it up to half full again. Serious coolant loss indicates a leak in the system. You should have it checked as soon as possible at your Toyota dealer.

If you have a flat tire—

1. Reduce your speed gradually, keeping a straight line. Move cautiously off the road to a safe place well away from the traffic. Avoid stopping on the center divider of a highway. Park on a level spot with firm ground.
2. Stop the engine and turn on your emergency flashers.
3. Firmly set the parking brake and put the transmission in “P”.
4. Have everyone get out of the vehicle on the side away from traffic.
5. Read the following instructions thoroughly.

CAUTION

When jacking, be sure to observe the following to reduce the possibility of personal injury:

- **Follow jacking instructions.**
- **Do not put any part of your body under the vehicle supported by the jack. Otherwise, personal injury may occur.**
- **Do not start or run the engine while your vehicle is supported by the jack.**
- **Stop the vehicle on a level firm ground, firmly set the parking brake and put the transmission in “P”. Block the wheel diagonally opposite to the one being changed if necessary.**

- **Make sure to set the jack properly in the jack point. Raising the vehicle with jack improperly positioned will damage the vehicle or may allow the vehicle to fall off the jack and cause personal injury.**
- **Never get under the vehicle when the vehicle is supported by the jack alone.**
- **Use the jack only for lifting your vehicle during wheel changing.**
- **Do not raise the vehicle with someone in the vehicle.**
- **When raising the vehicle, do not place any objects on top of or underneath the jack.**
- **Raise the vehicle only high enough to remove and change the tire.**

NOTICE

- ***Do not continue driving with a deflated tire. Driving even a short distance can damage a tire and wheel beyond repair.***
- ***Vehicles with rear height control air suspension: When jacking up or installing the tire chains, be sure to turn off the rear height control and stop the engine. Otherwise, the vehicle height may change in the automatic leveling function, resulting in accident.***

—Required tools and spare tire

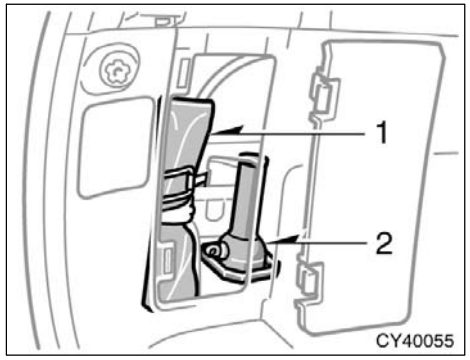

1. Get the required tools and spare tire.

1. Tool bag
2. Jack

To prepare yourself for an emergency, you should familiarize yourself with the use of the jack, each of the tools and their storage locations.

When storing the tool bag, make sure it is securely held by the tightening strap.

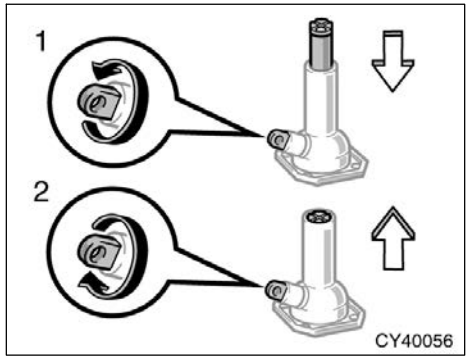

Turn the jack joint by hand.

To remove: Turn the joint in direction 1 until the jack is free.
To store: Turn the joint in direction 2 until the jack is firmly secured to prevent it flying forward during a collision or sudden braking.

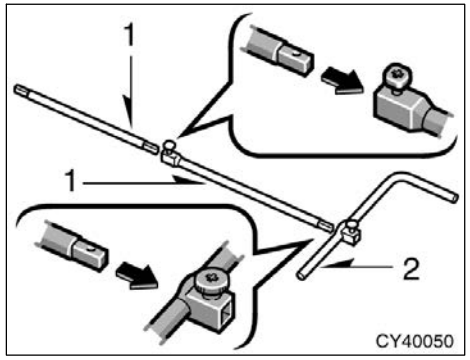

To remove the spare tire under the luggage compartment:

1. Put a jack handle and jack handle extensions together as shown in the illustration.
   1. Jack handle extensions
   2. Jack handle

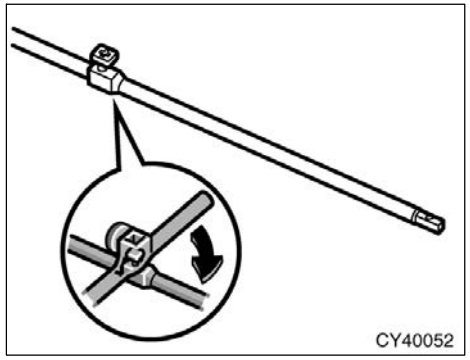

When connecting the jack handle extensions, use the jack handle to tighten the square head bolt. Make sure that the bolt fits into the depression on the joint.

When connecting the jack handle extension with the jack handle, tighten the round head bolt by hand.

NOTICE
Tighten the square head bolt securely. Otherwise, the extension may come off and it may damage the paint or vehicle body.

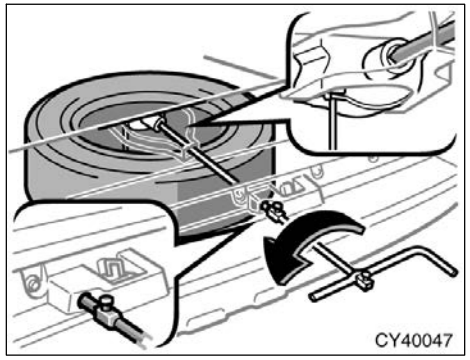

2. Insert the end of the jack handle extension into the lowering screw and turn it counterclockwise with the handle.
3. After the tire is lowered completely to the ground, remove the holding bracket.

When storing the spare tire, put it in place with the outer side of the wheel facing up. Then secure the tire, taking care that the tire goes straight up without catching on any other part, to prevent it from flying forward during a collision or sudden braking.

—Blocking the wheel

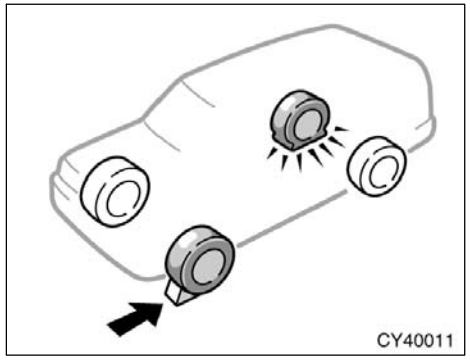

2. Block the wheel diagonally opposite the flat tire to keep the vehicle from rolling when it is jacked up.

When blocking the wheel, place a wheel block in front of one of the front wheels or behind one of the rear wheels.

—Removing wheel ornament

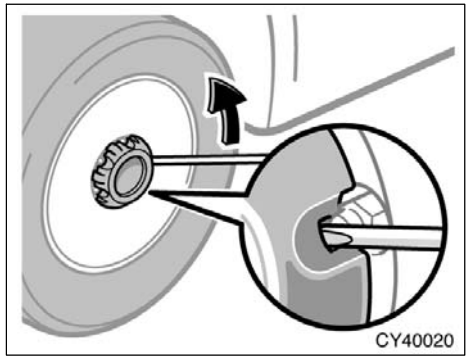

3. Remove the wheel ornament.

Pry off the wheel ornament, using the beveled end of the wheel nut wrench as shown.

⚠ CAUTION

Do not try to pull off the ornament by hand. Take due care in handling the ornament to avoid unexpected personal injury.

—Loosening wheel nuts

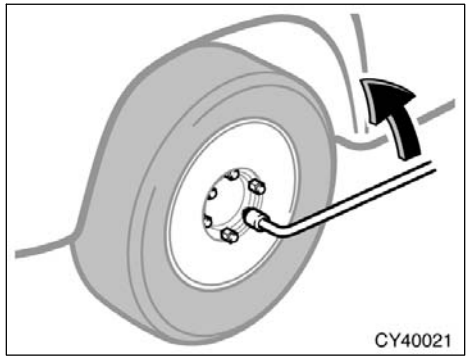

4. Loosen all the wheel nuts.

Always loosen the wheel nuts before raising the vehicle.

Turn the wheel nuts counterclockwise to loosen. To get maximum leverage, fit the wrench to the nut so that the handle is on the right side, as shown above. Grab the wrench near the end of the handle and pull up on the handle. Be careful that the wrench does not slip off the nut.

Do not remove the nuts yet—just unscrew them about one–half turn.

⚠ CAUTION

Never use oil or grease on the bolts or nuts. The nuts may loose and the wheels may fall off, which could cause a serious accident.

—Positioning the jack

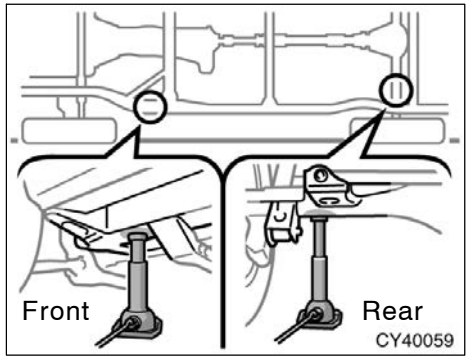

5. Position the jack at the correct jack point as shown.

Make sure the jack is positioned on a level and solid place.

JACK POINTS:

Front—Under the frame side rail
Rear—Under the rear axle housing

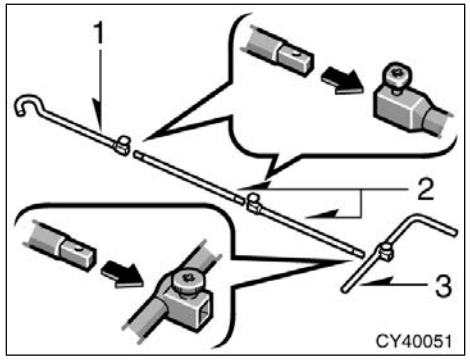

Put a jack handle, jack handle extensions and jack handle end together as shown in the illustration.

1. Jack handle end
2. Jack handle extensions
3. Jack handle

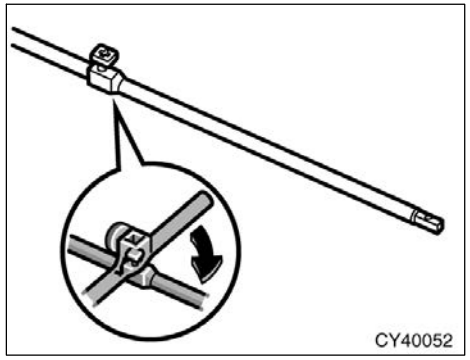

When connecting the jack handle extension(s) and jack handle end, use the jack handle to tighten the square head bolt. Make sure that the bolt fits into the depression on the joint.

When connecting the jack handle extension with the jack handle, tighten the round head bolt by hand.

NOTICE
Tighten the square head bolt securely. Otherwise, the extension may come off and it may damage the paint or vehicle body.

—Raising your vehicle

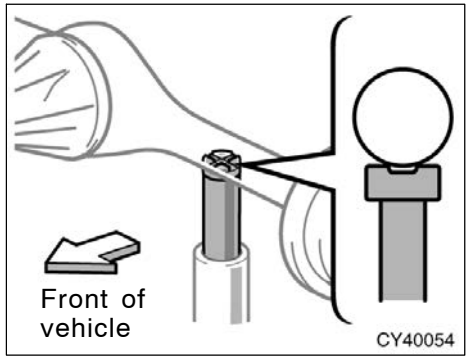

6. **After making sure that no one is in the vehicle, as the jack touches the vehicle and begins to fit, double−check that it is properly positioned.**

Rear side only—
When positioning the jack under the rear axle housing, make sure the groove on the top of the jack fits with the rear axle housing.

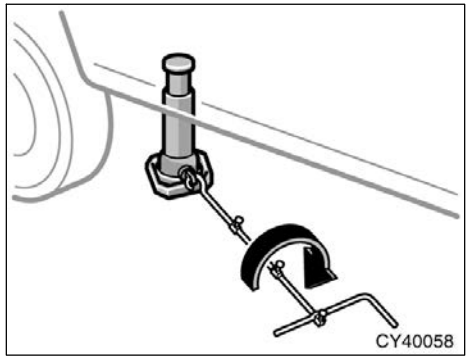

7. Raise the vehicle high enough so that the spare tire can be installed.

Remember you will need more ground clearance when putting on the spare tire than when removing the flat tire.

To raise the vehicle, insert the jack handle end into the jack (it is a loose fit) and turn it clockwise with the handle.

⚠ CAUTION

Never get under the vehicle when the vehicle is supported by the jack alone.

—Changing wheels

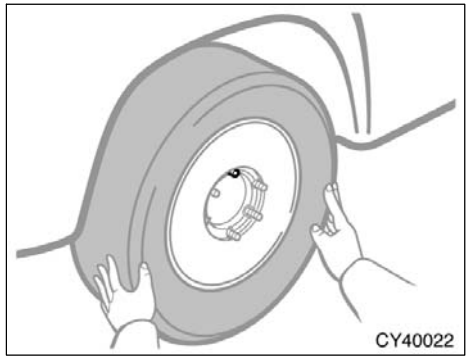

8. Remove the wheel nuts and change tires.

Lift the flat tire straight off and put it aside.

Roll the spare wheel into position and align the holes in the wheel with the bolts. Then lift up the wheel and get at least the top bolt started through its hole. Wiggle the tire and press it back over the other bolts.

—Reinstalling wheel nuts

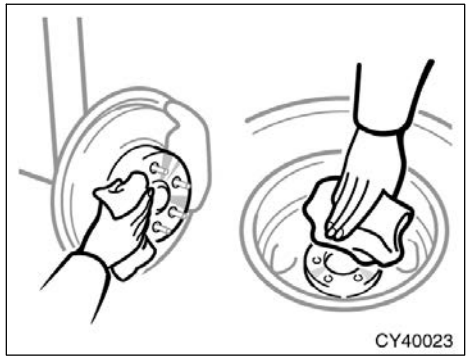

Before putting on wheels, remove any corrosion on the mounting surfaces with a wire brush or such. Installation of wheels without good metal–to–metal contact at the mounting surface can cause wheel nuts to loosen and eventually cause a wheel to come off while driving.

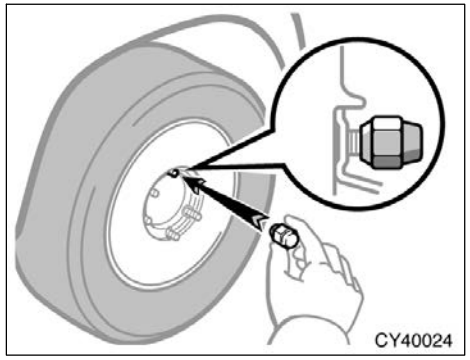

9. Reinstall all the wheel nuts finger tight.

Reinstall the wheel nuts (tapered end inward) and tighten them as much as you can by hand. Press back on the tire back and see if you can tighten them more.

⚠ CAUTION

Never use oil or grease on the bolts or nuts. Doing so may lead to overtightening the nuts and damaging the bolts. The nuts may loose and the wheels may fall off, which could cause a serious accident. If there is oil or grease on any bolt or nut, clean it.

—Lowering your vehicle

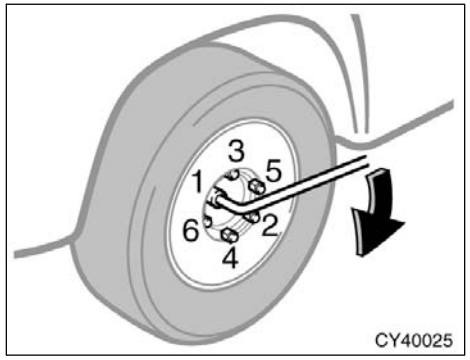

10. Lower the vehicle completely and tighten the wheel nuts.

Turn the jack handle extension counterclockwise with handle to lower the vehicle.

Use only the wheel nut wrench and turn it clockwise to tighten the nuts. Do not use other tools or any additional leverage other than your hands, such as a hammer, pipe or your foot. Make sure the wrench is securely engaged over the nut.

Tighten each nut a little at a time in the order shown. Repeat the process until all the nuts are tight.

⚠ CAUTION

- **When lowering the vehicle, make sure all portions of your body and all other persons around will not be injured as the vehicle is lowered to the ground.**
- **Have the wheel nuts tightened with torque wrench to 110 N·m (11.5 kgf·m, 83 ft·lbf), as soon as possible after changing wheels. Otherwise, the nuts may loosen and the wheels may fall off, which could cause a serious accident.**

—Reinstalling wheel ornament

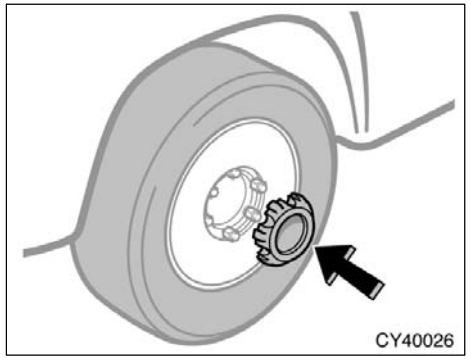

11. Reinstall the wheel ornament.

Put the wheel ornament into position and then tap it firmly with the side or heel of your hand to snap it into place.

⚠ CAUTION

- **Do not attach a heavily damaged plastic wheel ornament. It may fly off the wheel and cause accidents while the vehicle is moving.**
- **Take due care in handling the ornament to avoid unexpected personal injury.**

—After changing wheels

12. Check the air pressure of the replaced tire.

Adjust the air pressure to the specification designated on page 406 in Section 8. If the pressure is lower, drive slowly to the nearest service station and fill to the correct pressure.

Do not forget to reinstall the tire inflation valve cap as dirt and moisture could get into the valve core and possibly cause air leakage. If the cap is missing, have a new one put on as soon as possible.

13. Restow all the tools, jack and flat tire securely.

As soon after changing wheels as possible, tighten the wheel nuts to the torque specified on page 406 in Section 8 with a torque wrench. Have a technician repair the flat tire.

⚠ CAUTION

Before driving, make sure all the tools, jack and flat tire are securely in place in their storage location to reduce the possibility of personal injury during a collision or sudden braking.

If your vehicle becomes stuck

If your vehicle becomes stuck in snow, mud, sand, etc., then you may attempt to rock the vehicle free by moving it forward and backward.

Turn off the traction control system to become unstuck to allow the tires to spin enough to remove the vehicle from the obstruction. (For details, see “Traction control system” on page 168 in Section 1–7.)

⚠ CAUTION

Do not attempt to rock the vehicle free by moving it forward and backward if people or objects are anywhere near the vehicle. During the rocking operation the vehicle may suddenly move forward or backward as it becomes unstuck, causing injury or damage to nearby people or objects.

NOTICE

If you rock your vehicle, observe the following precautions to prevent damage to the transmission and other parts.

- ***Do not depress the accelerator pedal while shifting the selector lever or before the transmission is completely shifted to forward or reverse gear.***
- ***Do not race the engine and avoid spinning the wheels.***
- ***If your vehicle remains stuck after rocking the vehicle several times, consider other ways such as towing.***

If your vehicle needs to be towed—

(a) Towing with wheel lift type truck—

—From front

—From rear

(b) Using flat bed truck

CY40012

Two–wheel drive models

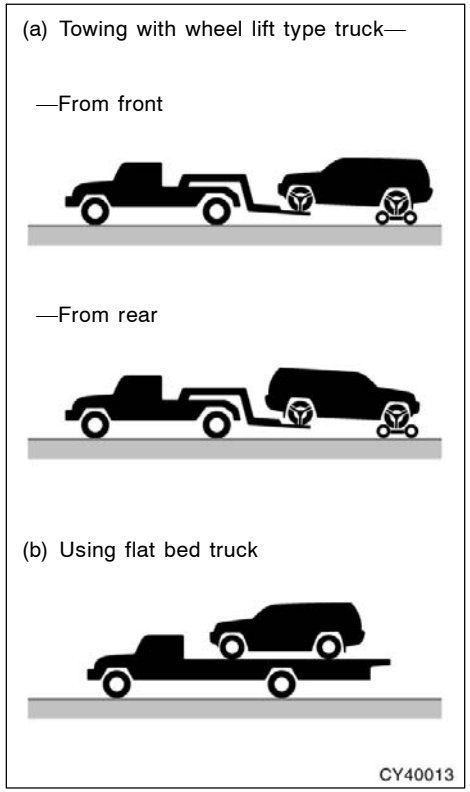

Four–wheel drive models

If towing is necessary, we recommend you to have it done by your Toyota dealer or a commercial tow truck service. In consultation with them, have your vehicle towed using either (a) or (b).

Only when you cannot receive a towing service from a Toyota dealer or commercial tow truck service, tow your vehicle carefully in accordance with the instructions given in “—Emergency towing” on page 348 in this Section.

Proper equipment will help ensure that your vehicle is not damaged while being towed. Commercial operators are generally aware of the state/provincial and local laws pertaining to towing.

Your vehicle can be damaged if it is towed incorrectly. Although most operators know the correct procedure, it is possible to make a mistake. To avoid damage to your vehicle, make sure the following precautions are observed. If necessary, show this page to the tow truck driver.

TOWING PRECAUTIONS:

Use a safety chain system for all towing, and abide by the state/provincial and local laws. The wheels and axle on the ground must be in good condition. If they are damaged, use a towing dolly.

⚠ CAUTION

Vehicles with rear height control air suspension: When your vehicle is towed, put the vehicle height in the “N” (normal) mode and push the “HEIGHT CONTROL OFF” switch to turn off the rear height control air suspension. Otherwise, the vehicle height may be changed in the automatic leveling function, resulting in accident. For details, see “Rear height control air suspension” on page 182 in Section 1–7.

Two–wheel drive models—

(a) Towing with wheel lift type truck

From front—Use a towing dolly under the rear wheels.

NOTICE

Never tow a vehicle from the front with the rear wheels on the ground, as this may cause serious damage to the transmission.

From rear—Place the ignition key in the "ACC" position.

NOTICE

- ***When lifting wheels, take care to ensure adequate ground clearance for towing at the opposite end of the raised vehicle. Otherwise, the bumper and/or underbody of the towed vehicle will be damaged during towing.***
- ***Do not tow with the key removed or in the "LOCK" position, as the steering lock mechanism is not strong enough to hold the front wheels straight while towing.***

(b) Using flat bed truck

Four–wheel drive models—

(a) Towing with wheel lift type truck

FULL–TIME FOUR WHEEL DRIVE MODELS

Use a towing dolly under the wheels not lifted by the truck.

MULTI–MODE FOUR WHEEL DRIVE MODELS

From front—Use a towing dolly under the rear wheels.

NOTICE

Never tow a vehicle from the front with the rear wheels on the ground, as this may cause serious damage to the transmission.

From rear—We recommend using a towing dolly under the front wheels. If you do not use a towing dolly, place the ignition key in the "ACC" position, put the transmission in "N" and the multi–mode control switch knob in "H2".

NOTICE

- ***When lifting wheels, take care to ensure adequate ground clearance for towing at the opposite end of the raised vehicle. Otherwise, the bumper and/or underbody of the towed vehicle will be damaged during towing.***
- ***Do not tow with the key removed or in the "LOCK" position when towing from the rear without a towing dolly. The steering lock mechanism is not strong enough to hold the front wheels straight.***

(b) Using flat bed truck

—Emergency towing

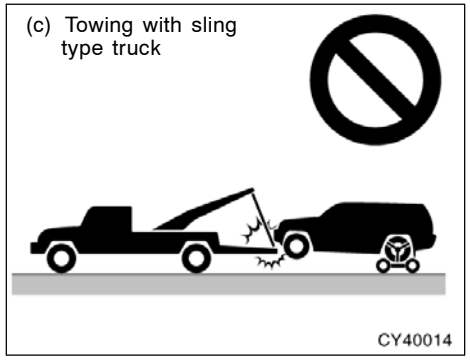

All models—

(c) Towing with sling type truck

NOTICE
Do not tow with sling type truck, either from the front or rear. This may cause body damage.

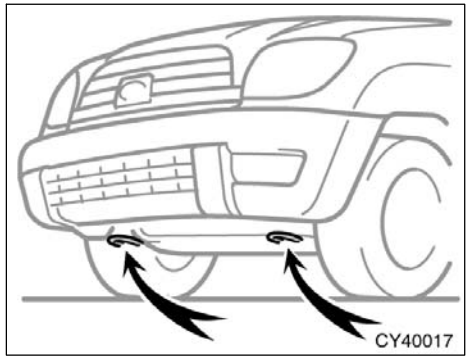

If towing is necessary, we recommend you to have it done by your Toyota dealer or a commercial tow truck service.

If towing service is not available in an emergency, your vehicle may be temporarily towed by a cable or chain secured to one of the emergency towing eyelets under the front of the vehicle. Use extreme caution when towing the vehicles.

NOTICE
◆***Only use specified towing eyelet; otherwise your vehicle may be damaged.*** ◆***Never tow a vehicle from the rear with four wheels on the ground. This may cause serious damage to the transmission.***

A driver must be in the vehicle to steer it and operate the brakes.

Towing in this manner may be done only on hard–surfaced roads for a short distance and at low speeds. Also, the wheels, axles, drive train, steering and brakes must all be in good condition.

⚠ CAUTION
Use extreme caution when towing vehicles. Avoid sudden starts or erratic driving maneuvers which would place excessive stress on the emergency towing eyelet and towing cable or chain. The eyelet and towing cable or chain may break and cause serious injury or damage.

NOTICE

Use only a cable or chain specifically intended for use in towing vehicles. Securely fasten the cable or chain to the towing eyelet provided.

Before towing, release the parking brake and put the transmission in “N”. The key must be in “ACC” (engine off) or “ON” (engine running).

Four–wheel drive models—On multi–mode four–wheel drive models, put the multi–mode control switch knob in “H2”. On full–time four–wheel drive models, unlock the center differential.

CAUTION

If the engine is not running, the power assist for the brakes and steering will not work so steering and braking will be much harder than usual.

—Emergency towing eyelet precautions

- Before emergency towing, check that the eyelet is not broken or damaged and that the installation bolts are not loose.
- Fasten the towing cable or chain securely to the eyelet.
- Do not jerk the eyelet. Apply steady and even force.
- To avoid damaging the eyelet, do not pull from the side or at a vertical angle. Always pull straight ahead.

CAUTION

If the emergency towing eyelet is used to get out when your vehicle becomes struck in mud, sand or other condition from which the vehicle cannot be driven out under its own power, make sure to observe the precautions mentioned below. Otherwise, excessive stress will be put on the eyelet and the towing cable or chain may break, causing serious injury or damage.

- **If the towing vehicle can hardly move, do not forcibly continue the towing. Contact your Toyota dealer or a commercial tow truck service for assistance.**
- **Tow the vehicle as straight ahead as possible.**
- **Keep away from the vehicle during towing.**

—Tips for towing a stuck vehicle

The following methods are effective to get out when your vehicle is struck in mud, sand or other condition from which the vehicle cannot be driven out under its own power. Use extreme caution when towing vehicles. In addition, keep away from the vehicles and towing cable or chain when towing.

- Remove the soil and sand in the front and the back of the tires.
- Place a stone or wood under the tires.

If you cannot shift automatic transmission selector lever

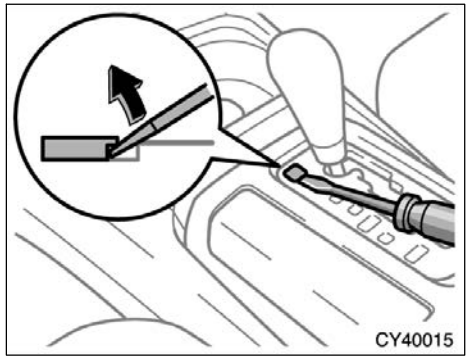

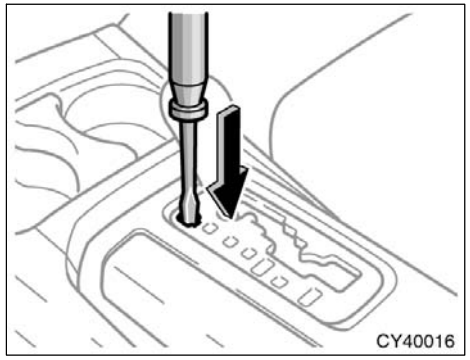

If you cannot shift the selector lever out of the “P” position to other positions even though the brake pedal is depressed, use the shift lock override button as follows:

1. **Turn the ignition key to the “LOCK” position. Make sure the parking brake is set.**
2. **Pry up the cover with a flathead screwdriver or equivalent.**
3. **Insert the screwdriver or equivalent into the hole to push down the shift lock override button. You can shift out of the “P” position only while pushing the button.**
4. **Shift into the “N” position.**
5. **Insert the cover.**
6. **Start the engine. For your safety, keep the brake pedal depressed.**

Be sure to have the system checked by your Toyota dealer as soon as possible.

If you lose your keys

You can purchase a new key at your Toyota dealer if you can give them the key number and master key.

Even if you lose only one key, contact your Toyota dealer to make a new key. If you lose all your master keys, you cannot make new keys; the whole engine immobilizer system must be replaced.

See the suggestion given in “Keys” on page 12 in Section 1–2.

If your keys are locked in the vehicle and you cannot get a duplicate, many Toyota dealers can still open the door for you, using their special tools. If you must break a window to get in, we suggest breaking the smallest side window because it is the least expensive to replace. Be extremely cautious to avoid cuts from the glass.

If you lose your wireless remote control transmitter

Please contact your nearest Toyota dealer and you can purchase a new wireless remote control transmitter.

Have the registered identification numbers of your transmitters deleted from your vehicle by your Toyota dealer as soon as possible to avoid the possibility of theft or an accident. Then, have the identification number of your new transmitter registered. At the same time, you must bring all of the remaining transmitters to have them registered again as well.

SECTION 5

CORROSION PREVENTION AND APPEARANCE CARE

Protecting your Toyota from corrosion 354
Washing and waxing your Toyota 355
Cleaning the interior 357
Rain clearing mirrors 359

Protecting your Toyota from corrosion

Toyota, through the diligent research, design and use of the most advanced technology available, helps prevent corrosion and provides you with the finest quality vehicle construction. Now, it is up to you. Proper care of your Toyota can help ensure long–term corrosion prevention.

The most common causes of corrosion to your vehicle are:

- The accumulation of road salt, dirt and moisture in hard–to–reach areas under the vehicle.
- Chipping of paint, or undercoating caused by minor accidents or by stones and gravel.

Care is especially important if you live in particular areas or operate your vehicle under certain environmental conditions:

- Road salt or dust control chemicals will accelerate corrosion, as will the presence of salt in the air near the sea–coast or in areas of industrial pollution.
- High humidity accelerates corrosion especially when temperatures range just above the freezing point.
- Wetness or dampness to certain parts of your vehicle for an extended period of time, may cause corrosion even though other parts of the vehicle may be dry.
- High ambient temperatures can cause corrosion to those components of the vehicle which do not dry quickly due to lack of proper ventilation.

The above signifies the necessity to keep your vehicle, particularly the underside, as clean as possible and to repair any damage to paint or protective coatings as soon as possible.

To help prevent corrosion on your Toyota, follow these guidelines:

Wash your vehicle frequently. It is, of course, necessary to keep your vehicle clean by regular washing, but to prevent corrosion, the following points should be observed:

- If you drive on salted roads in the winter or if you live near the ocean, you should hose off the undercarriage at least once a month to minimize corrosion.
- High pressure water or steam is effective for cleaning the vehicle’s underside and wheel housings. Pay particular attention to these areas as it is difficult to see all the mud and dirt. It will do more harm than good to simply wet the mud and debris without removing. The lower edge of doors, rocker panels and frame members have drain holes which should not be allowed to clog with dirt as trapped water in these areas can cause corrosion.
- Wash the underside of the vehicle thoroughly when winter is over.

See “Washing and waxing your Toyota” on page 355 in this Section for more tips.

Check the condition of your vehicle’s paint and trim. If you find any chips or scratches in the paint, touch them up immediately to prevent corrosion from starting. If the chips or scratches have gone through the bare metal, have a qualified body shop make the repair.

Check the interior of your vehicle. Water and dirt can accumulate under the floor mats and could cause corrosion. Occasionally check under the mats to make sure the area is dry. Be particularly careful when transporting chemicals, cleansers, fertilizers, salt, etc; these should be transported in proper containers. If a spill or leak should occur, immediately clean and dry the area.

Use mud shields on your wheels. If you drive on salted or gravel roads, mud shields help protect your vehicle. Full–size shields, which come as near to the ground as possible, are the best. We recommend that the fittings and the area where the shields are installed be treated to resist corrosion. Your Toyota dealer will be happy to assist in supplying and installing the shields if they are recommended for your area.

Keep your vehicle in a well ventilated garage or a roofed place. Do not park your vehicle in a damp, poorly ventilated garage. If you wash your vehicle in the garage, or if you drive it covered with water or snow, your garage may be so damp as to cause corrosion. Even if your garage is heated, a wet vehicle can corrode if the ventilation is poor.

Washing and waxing your Toyota

Washing your Toyota

Keep your vehicle clean by regular washing.

The following cases may cause weakness to the paint or corrosion to the body and parts. Wash your vehicle as soon as possible.

- When driving in a coastal area
- When driving on a road sprinkled with antifreeze
- When exposed to coal tar, tree sap, bird droppings and carcass of an insect
- When driving in areas where there is a lot of smoke, soot, dust, iron dust or chemical substances
- When the vehicle becomes remarkably dirty with dust and mud

Hand–washing your Toyota

Work in the shade and wait until the vehicle body is not warm to the touch.

CAUTION

When cleaning under floor or chassis, be careful not to injure your hands.

1. Rinse off loose dirt with a hose. Remove any mud or road salt from the underside of the vehicle or the wheel wells.
2. Wash with a mild car–wash soap, mixed according to the manufacturer’s instructions. Use a soft cotton mitt and keep it wet by dipping it frequently into the wash water. Do not rub hard—let the soap and water remove the dirt.

Fuel filler door: Do not apply water (high–pressure car wash, for example) at or near the fuel tank inlet with the fuel filler door opened. If the water enters the air vent, you may experience trouble with refueling or rough engine idling.

Rear height control air suspension: Do not spray a jet of high–pressure water at the air suspension unit, especially the air spring, at an extremely close range. This may damage the air suspension.

Plastic wheel ornaments: The plastic wheel ornaments are damaged easily by organic substances. If any organic substances splash an ornament, be sure to wash them off with water and check if the ornament is damaged.

Aluminum wheels: Use only a mild soap or neutral detergent.

Plastic bumpers: Wash carefully. Do not scrub with abrasive cleaners. The bumper faces are soft.

Exterior lights: Wash carefully. Do not use organic substances or scrub them with a hard brush. This may damage the surfaces of the lights.

Road tar: Remove with turpentine or cleaners that are marked safe for painted surfaces.

3. Rinse thoroughly—dried soap can cause streaking. In hot weather you may need to rinse each section right after you wash it.
4. To prevent water spots, dry the vehicle using a clean soft cotton towel. Do not rub or press hard—you might scratch the paint.

NOTICE

- ***Do not use organic substances (gasoline, kerosene, benzine or strong solvents), which may be toxic or cause damage.***
- ***Do not scrub any part of the vehicle with a hard brush, which may cause damage.***

Automatic car wash

Your vehicle may be washed in an automatic car wash, but remember that the paint can be scratched by some types of brushes, unfiltered washing water, or the washing process itself. Scratching reduces paint durability and gloss, especially on darker colors. The manager of the car wash should be able to advise you whether the process is safe for the paint on your vehicle.

Waxing your Toyota

Polishing and waxing is recommended to maintain the original beauty of your Toyota’s finish.

Apply wax once a month or if the vehicle surface does not repel water well.

1. Always wash and dry the vehicle before you begin waxing, even if you are using a combined cleaner and wax.
2. Use a good quality polish and wax. If the finish has become extremely weathered, use a car–cleaning polish, followed by a separate wax. Carefully follow the manufacturer’s instructions and precautions. Be sure to polish and wax the chrome trim as well as the paint.
3. Wax the vehicle again when water does not bead but remains on the surface in large patches.

Exterior lights: Do not apply wax on the surfaces of the lights. Wax may cause damage to the lenses. If you accidentally put wax on the light surfaces, wipe or wash it off.

Cleaning the interior

NOTICE

Always remove the plastic bumpers if your vehicle is re−painted and placed in a high heat paint waxing booth. High temperatures could damage the bumpers.

CAUTION

- **Vehicles with side airbags and curtain shield airbags:**

  Be careful not to splash water or spill liquid on the floor. This may prevent the side airbags and curtain shield airbags from activating correctly, resulting in serious injury.
- **Do not wash the vehicle floor with water, or allow water to get onto the floor when cleaning the vehicle interior or exterior. Water may get into audio components or other electrical components above or under the floor carpet (or mat) and cause a malfunction; and it may cause body corrosion.**

Vinyl interior

The vinyl upholstery may be easily cleaned with a mild soap or detergent and water.

First vacuum over the upholstery to remove loose dirt. Then, using a sponge or soft cloth, apply the soap solution to the vinyl. After allowing it to soak in for a few minutes to loosen the dirt, remove the dirt and wipe off the soap with a clean damp cloth. If all the dirt does not come off, repeat the procedure. Commercial foaming−type vinyl cleaners are also available which work well. Follow the manufacturer’s instructions.

NOTICE

Do not use solvent, thinner, gasoline or window cleaner on the interior.

Carpets

Use a good foam–type shampoo to clean the carpets.

Begin by vacuuming thoroughly to remove as much dirt as possible. Several types of foam cleaners are available; some are in aerosol cans and others are powders or liquids which you mix with water to produce a foam. To shampoo the carpets, use a sponge or brush to apply the foam. Rub in overlapping circles.

Do not apply water—the best results are obtained by keeping the carpet as dry as possible. Read the shampoo instructions and follow them closely.

Seat belts

The seat belts may be cleaned with mild soap and water or with lukewarm water.

Use a cloth or sponge. As you are cleaning, check the belts for excessive wear, fraying, or cuts.

NOTICE

- ***Do not use dye or bleach on the belts—it may weaken them.***
- ***Do not use the belts until they become dry.***

Windows

The windows may be cleaned with any household window cleaner.

NOTICE

- ***When cleaning the inside of the rear window, be careful not to scratch or damage the heater wires or connectors.***
- ***When cleaning the inside of the rear quarter window, be careful not to scratch or damage the printed antenna.***

Air conditioning control panel, audio panel, instrument panel, console panel and switches

Use a soft damp cloth for cleaning.

Soak a clean soft cloth in water or lukewarm water then lightly wipe off dirt.

NOTICE

- ***Do not use organic substances (solvents, kerosene, alcohol, gasoline, etc.) or alkaline or acidic solutions. These chemicals can cause discoloring, staining or peeling of the surface.***
- ***If you use cleaners or polishing agents, make sure their ingredients do not include the substances mentioned above.***
- ***If you use a liquid car freshener, do not apill the liquid onto the vehicle’s interior surfaces. It may contain the ingredients mentioned above. Immediately clean any spill using the method mentioned above.***

Leather interior

The leather upholstery may be cleaned with neutral detergent for wool.

Remove dirt using a soft cloth dampened with 5% solution of neutral detergent for wool. Then thoroughly wipe off all traces of detergent with a clean damp cloth.

After cleaning or whenever any part of the leather gets wet, dry with a soft clean cloth. Allow the leather to dry in a ventilated shaded area.

NOTICE

- ***If a stain should fail to come out with a neutral detergent, apply a cleaner that does not contain an organic solvent.***
- ***Never use organic substances such as benzine, alcohol or gasoline, or alkaline or acid solutions for cleaning the leather as these could cause discoloring.***
- ***Use of a nylon brush or synthetic fiber cloth, etc. may scratch the fine grained surface of the leather.***
- ***Mildew may develop on soiled leather upholstery. Be especially careful to avoid oil spots. Try to keep your upholstery always clean.***
- ***Long exposure to direct sunlight may cause the leather surface to harden and shrink. Keep your vehicle in a shaded area, especially in the summer.***
- ***The interior of your vehicle is apt to heat up on hot summer days, so avoid placing on the upholstery items made of vinyl or plastic or containing wax as these tend to stick to leather when warm.***
- ***Improper cleaning of the leather upholstery could result in discoloration or staining.***

If you have any questions about the cleaning of your Toyota, your local Toyota dealer will be pleased to answer them.

Rain clearing mirrors

On some models, the outside rear view mirrors have been coated to produce a “rain clearing” effect. This coating causes the raindrops to spread, clearing the driver’s rear view when it rains.

It is sufficient to wash the mirrors with water for day to day care.

The rain clearing effect is reduced in drizzle and light rain.

In the following cases, the rain clearing effect will be reduced temporarily, but will gradually recover.

- After wiping dirt off the mirrors
- When the mirrors fog up
- After waxing your vehicle in an automatic car wash
- After your vehicle has been parked for a long period in underground parking lots, etc. where there is no direct sunlight.

If you would like to restore the rain clearing effect to its normal level immediately in the above cases, wash the mirrors with neutral detergent, then rinse thoroughly.

NOTICE

To maintain the rain clearing ability, and prevent the mirrors from being scratched, observe the following precautions.

- ***Do not use any glass cleaners that contain compounds.***
- ***If ice should jam the mirror, do not scrape the mirror. Use a spray de−icer to free the mirror.***
- ***Wash off any wax stuck to the mirrors with neutral detergent and rinse thoroughly as any wax on the surface of the mirrors can cause the rain clearing effect to be lost.***
- ***Do not use any water repellents as they can destroy the rain clearing effect. If any repellent gets stuck on the surface of the mirrors, wash it off with neutral detergent, then rinse thoroughly.***

SECTION 6

VEHICLE MAINTENANCE AND CARE

Maintenance requirements 362
General maintenance 363
Does your vehicle need repairing? 365
Emissions Inspection and Maintenance (I/M) programs 366

For scheduled maintenance information, please refer to the “Scheduled Maintenance Guide” or “Owner’s Manual Supplement”.

Maintenance requirements

Your Toyota vehicle has been designed for fewer maintenance requirements with longer service intervals to save both your time and money. However, each regular maintenance, as well as day–to–day care, is more important than ever before to ensure smooth, and trouble–free, safe, and economical drivings.

It is the owner’s responsibility to make sure the specified maintenance, including general maintenance service, is performed. Note that both the new vehicle and emission control system warranties specify that proper maintenance and care must be performed. See “Owner’s Warranty Information Booklet” or “Owner’s Manual Supplement” for complete warranty information.

General maintenance

General maintenance items are those day–to–day care practices that are important to your vehicle for proper operation. It is the owner’s responsibility to ensure that the general maintenance items are performed regularly.

These checks or inspections can be done either by yourself or a qualified technician, or if you prefer, your Toyota dealer will be pleased to do them at a nominal cost.

Scheduled maintenance

The scheduled maintenance items listed in the “Scheduled Maintenance Guide” or “Owner’s Manual Supplement” are those required to be serviced at regular intervals.

For details of your maintenance schedule, read the “Scheduled Maintenance Guide” or “Owner’s Manual Supplement”.

It is recommended that any replacement parts used for maintenance or for the repair of the emission control system be Toyota supplied.

The owner may elect to use non–Toyota supplied parts for replacement purposes without invalidating the emission control system warranty. However, use of replacement parts which are not of equivalent quality may impair the effectiveness of the emission control systems.

You may also elect to have maintenance, replacement, or repair of the emission control devices and system performed by any automotive repair establishment or individual without invalidating this warranty. See “Owner’s Warranty Information Booklet” or “Owner’s Manual Supplement” for complete warranty information.

Where to go for service?

Toyota technicians are well–trained specialists and are kept up to date with the latest service information through technical bulletins, service tips, and in–dealership training programs. They learn to work on Toyotas before they work on your vehicle, rather than while they are working on it.

You can be confident that your Toyota dealer’s service department performs the best job to meet the maintenance requirements on your vehicle—reliably and economically.

Your copy of the repair order is proof that all required maintenance has been performed for warranty coverage. If any problems should arise with your vehicle while under warranty, your Toyota dealer will promptly take care of it. Again, be sure to keep a copy of the repair order for any service performed on your Toyota.

What about do–it–yourself maintenance?

Many of the maintenance items are easy to do yourself if you have a little mechanical ability and a few basic automotive tools. Simple instructions for how to perform them are presented on page 367 in Section 7.

If you are a skilled do–it–yourself mechanic, the Toyota service manuals are recommended. Please be aware that do–it–yourself maintenance can affect your warranty coverage. See “Owner’s Warranty Information Booklet” or “Owner’s Manual Supplement” for the details.

General maintenance

Listed below are the general maintenance items that should be performed as frequently as specified. In addition to checking the items listed, if you notice any unusual noise, smell or vibration, you should investigate the cause or take your vehicle to your Toyota dealer or a qualified service shop immediately. It is recommended that any problem you notice be brought to the attention of your dealer or the qualified service shop for their advice.

⚠ CAUTION

Make these checks only with adequate ventilation if you run the engine.

IN THE ENGINE COMPARTMENT

Items listed below should be checked from time to time, e.g. each time when refueling.

Washer fluid

Make sure there is sufficient fluid in the tank. See page 393 in Section 7–3 for additional information.

Engine coolant level

Make sure the coolant level is between the “F” and “L” lines on the see–through reservoir when the engine is cold. See page 378 in Section 7–2 for additional information.

Radiator, condenser and hoses

Check that the front of the radiator and condenser are clean and not blocked with leaves, dirt, or insects. See page 379 in Section 7–2 for additional information.

Battery condition

Check the battery condition by the indicator color. See page 390 in Section 7–3 for additional information.

Brake fluid level

Make sure the brake fluid level is correct. See page 380 in Section 7–2 for additional information.

Engine oil level

Check the level on the dipstick with the engine turned off and the vehicle parked on a level spot. See page 376 in Section 7–2 for additional information.

Power steering fluid level

Check the level through the reservoir. The level should be in the “HOT” or “COLD” range depending on the fluid temperature. See page 381 in Section 7–2 for additional information.

Exhaust system

If you notice any change in the sound of the exhaust or smell exhaust fumes, have the cause located and corrected immediately. (See “Engine exhaust cautions” on page 287 in Section 2.)

INSIDE THE VEHICLE

Items listed below should be checked regularly, e.g. while performing periodic services, cleaning the vehicle, etc.

Lights

Make sure the headlights, stop lights, tail lights, turn signal lights, and other lights are all working. Check headlight aim.

Service reminder indicators and warning buzzers

Check that all service reminder indicators and warning buzzers function properly.

Steering wheel

Check that it has the specified free play. Be alert for changes in steering condition, such as hard steering or strange noise.

Seats

Check that all front seat controls such as seat adjusters, seatback recliner, etc. operate smoothly and that all latches lock securely in any position. Check that the head restraint move up and down smoothly and that the locks hold securely in any latched position. For folding–down rear seatbacks and swing–up rear seat cushions (vehicles without third seats), tumbling second seats (vehicles with third seats), folding–up third seats and detachable third seats, check that the latches lock securely.

Seat belts

Check that the seat belt system such as buckles, retractors and anchors operate properly and smoothly. Make sure that the belt webbing is not cut, frayed, worn or damaged.

Accelerator pedal

Check the pedal for smooth operation and uneven pedal effort or catching.

Brake pedal

Check the pedal for smooth operation and that the pedal has the proper clearance. Check the brake booster function.

Brakes

In a safe place, check that the brakes do not pull to one side when applied.

Parking brake

Check that the pedal has the proper travel and that, on a safe incline, your vehicle is held securely with only the parking brake applied.

Automatic transmission “Park” mechanism

On a safe incline, check that your vehicle is held securely with the selector lever in “P” position and all brakes released.

OUTSIDE THE VEHICLE

Items listed below should be performed from time to time, unless otherwise specified.

Fluid leaks

Check underneath for leaking fuel, oil, water or other fluid after the vehicle has been parked for a while. If you smell fuel fumes or notice any leak, have the cause found and corrected immediately.

Doors and engine hood

Check that all doors including back door operate smoothly and all latches lock securely. Make sure the engine hood secondary latch secures the hood from opening when the primary latch is released.

Tire inflation pressure

Check the pressure with a gauge every two weeks, or at least once a month. See page 381 in Section 7–2 for additional information.

Tire surface and wheel nuts

Check the tires carefully for cuts, damage or excessive wear. See page 384 in Section 7–2 for additional information. When checking the tires, make sure no nuts are missing, and check the nuts for looseness. Tighten them if necessary.

Tire rotation

Rotate the tires according to the maintenance schedule. (For scheduled maintenance information, please refer to the “Scheduled Maintenance Guide” or “Owner’s Manual Supplement”.) See page 386 in Section 7–2 for additional information.

Does your vehicle need repairing?

Be on the alert for changes in performance, sounds, and visual tip–offs that indicate service is needed. Some important clues are as follows:

- Engine missing, stumbling, or pinging
- Appreciable loss of power
- Strange engine noises
- A leak under the vehicle (however, water dripping from the air conditioning after use is normal.)
- Change in exhaust sound (This may indicate a dangerous carbon monoxide leak. Drive with the windows open and have the exhaust system checked immediately.)
- Flat–looking tire; excessive tire squeal when cornering; uneven tire wear
- Vehicle pulls to one side when driving straight on a level road
- Strange noises related to suspension movement
- Loss of brake effectiveness; spongy feeling brake pedal; pedal almost touches floor; vehicle pulls to one side when braking
- Engine coolant temperature continually higher than normal

If you notice any of these clues, take your vehicle to your Toyota dealer as soon as possible. It probably needs adjustment or repair.

⚠ CAUTION

Do not continue driving with the vehicle unchecked. It could result in serious vehicle damage and possibly personal injury.

Emissions Inspection and Maintenance (I/M) programs

Some states have vehicle emission inspection programs which include OBD (On–Board Diagnostics) checks.

The OBD system monitors the operation of the emission control system. When the OBD system determines that a problem exists somewhere in the emission control system, the malfunction indicator lamp comes on. In this case, your vehicle may not pass the I/M test and need to be repaired. Contact your Toyota dealer to service the vehicle.

Even if the malfunction indicator lamp does not come on, your vehicle may not pass the I/M test as readiness codes have not been set in the OBD system.

Readiness codes are automatically set during ordinary driving. However, when the battery is disconnected or run down, the codes are erased. Also, depending on your driving habits, the codes may not be completely set.

Also, if the malfunction indicator lamp had come on recently due to temporary malfunction such as a loose fuel tank cap, your vehicle may not pass the I/M test.

The malfunction indicator lamp will go off after taking several driving trips, but the error code in the OBD system will not be cleared unless about 40 trips or more are taken.

If your vehicle does not pass the I/M test even the malfunction indicator lamp does not come on, contact your Toyota dealer to prepare the vehicle for re–testing.

SECTION 7–1

DO–IT–YOURSELF MAINTENANCE

Introduction

Engine compartment overview 368
Fuse locations 370
Do–it–yourself service precautions 370
Parts and tools 372

Engine compartment overview

▶1GR−FE engine

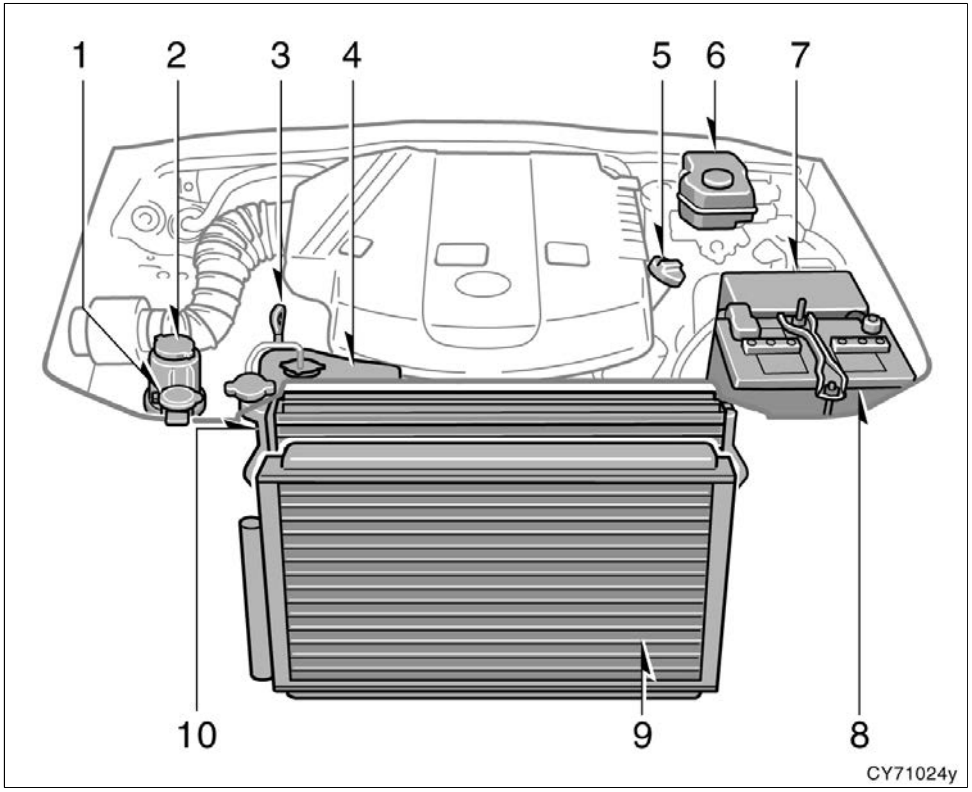

1. Windshield and back window washer fluid tank
2. Power steering fluid reservoir
3. Engine oil level dipstick
4. Engine coolant reservoir
5. Engine oil filler cap
6. Brake fluid reservoir
7. Fuse block
8. Battery
9. Condenser
10. Radiator

▶2UZ−FE engine

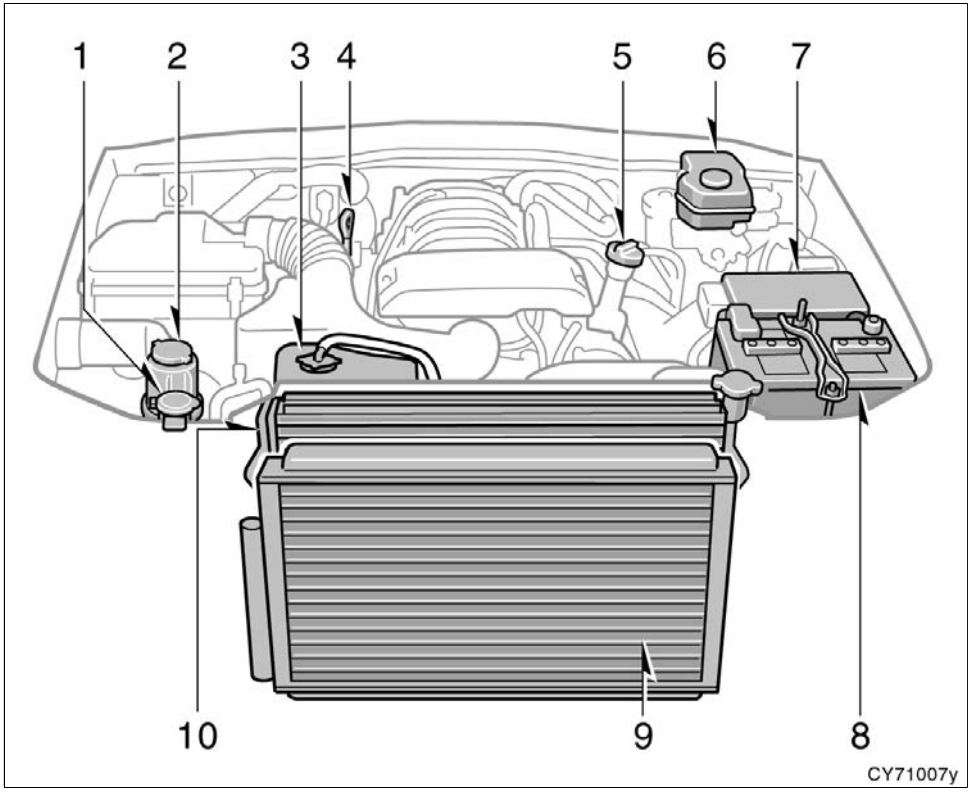

1. Windshield and back window washer fluid tank
2. Power steering fluid reservoir
3. Engine coolant reservoir
4. Engine oil level dipstick
5. Engine oil filler cap
6. Brake fluid reservoir
7. Fuse block
8. Battery
9. Condenser
10. Radiator

Fuse locations

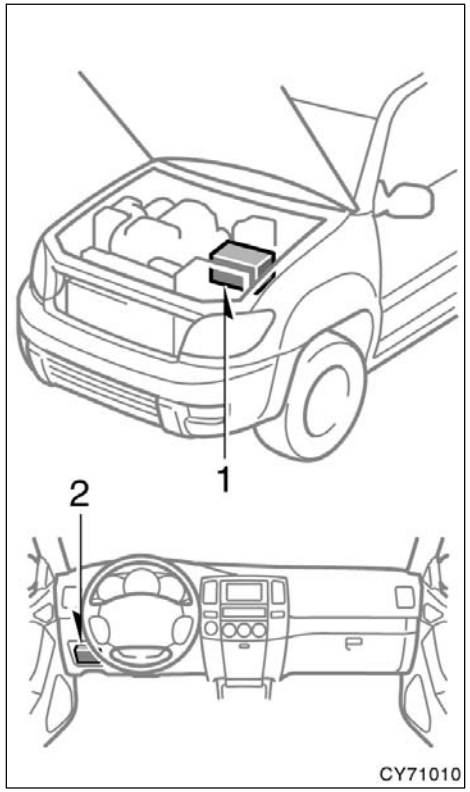

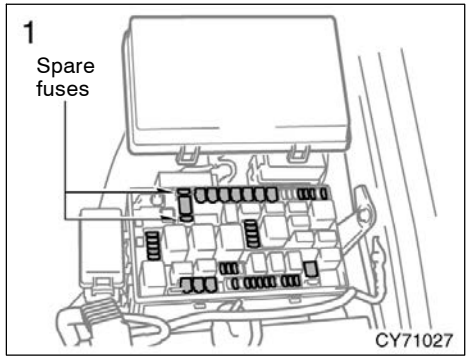

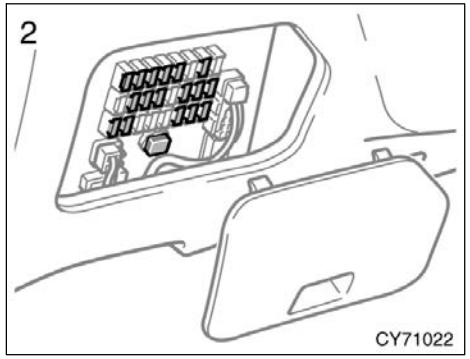

Do–it–yourself service precautions

If you perform maintenance by yourself, be sure to follow the correct procedure given in this Section.

You should be aware that improper or incomplete servicing may result in operating problems.

Performing do–it–yourself maintenance during the warranty period may affect your warranty coverage. Read the separate Toyota Warranty statement for details and suggestions.

This Section gives instructions only for those items that are relatively easy for an owner to perform. As explained in Section 6, there are still a number of items that must be done by a qualified technician with special tools.

For information on tools and parts for do–it–yourself maintenance, see “Parts and tools” on page 372 in this Section.

Utmost care should be taken when working on your vehicle to prevent accidental injury. Here are a few precautions that you should be especially careful to observe:

CAUTION

- When the engine is running, keep hands, clothing, and tools away from the moving fan and engine drive belts. (Removing rings, watches, and ties is advisable.)
- Right after driving, the engine compartment—the engine, radiator, exhaust manifold, power steering fluid reservoir and spark plug boots, etc.—will be hot. So be careful not to touch them. Oil, fluids and spark plugs may also be hot.
- If the engine is hot, do not remove the radiator cap or loosen the drain plugs to prevent burning yourself.
- Do not leave anything that may burn easily, such as paper or rags, in the engine compartment.
- Do not smoke, cause sparks or allow open flames around fuel or the battery. Their fumes are flammable.
- Do not get under your vehicle with just the body jack supporting it. Always use automotive jack stands or other solid supports.
- Use eye protection whenever you work on or under your vehicle where you may be exposed to flying or falling material, fluid spray, etc.
- Used engine oil contains potentially harmful contaminants which may cause skin disorders such as inflammation or skin cancer, so care should be taken to avoid prolonged and repeated contact with it. To remove used engine oil from your skin, wash thoroughly with soap and water.
- Do not leave used oil within the reach of children.
- Dispose of used oil and filter only in a safe and acceptable manner. Do not dispose of used oil and filter in household trash, in sewers or onto the ground. Call your dealer or a service station for information concerning recycling or disposal.
- Be extremely cautious when working on the battery. It contains poisonous and corrosive sulfuric acid.

NOTICE

- *Remember that battery and ignition cables carry high currents or voltages. Be careful of accidentally causing a short circuit.*
- *Add only “Toyota Super Long Life Coolant” or similar high quality ethylene glycol based non−silicate, non−amine, non−nitrite, and non−borate coolant with long−life hybrid organic acid technology to fill the radiator. “Toyota Super Long Life Coolant” is a mixture of 50% coolant and 50% deionized water (for the U.S.A.) or 55% coolant and 45% deionized water (for Canada).*
- *If you spill some of the coolant, be sure to wash it off with water to prevent it from damaging the parts or paint.*
- *Do not allow dirt or anything else to fall through the spark plug holes.*
- *Use only spark plugs of the specified type. Using other types will cause engine damage, loss of performance or radio noise.*
- *Do not reuse iridium−tipped spark plugs by cleaning or regapping.*

◆*Do not overfill automatic transmission fluid, or the transmission could be damaged.*

◆*Do not drive with the air cleaner filter removed, or excessive engine wear could result. Also backfiring could cause a fire in the engine compartment.*

◆*Be careful not to scratch the glass surface with the wiper frame.*

◆*When closing the engine hood, check to see that you have not forgotten any tools, rags, etc.*

Parts and tools

Here is a list of parts and tools you will need to perform do–it–yourself maintenance. Remember all Toyota parts are designed in metric sizes, so your tools must be metric.

CHECKING THE ENGINE OIL LEVEL

Parts (if level is low):

- “Toyota Genuine Motor Oil” or equivalent

  See page 377 in Section 7–2 for details about engine oil selection.

Tools:

- Rag or paper towel
- Funnel (only for adding oil)

CHECKING THE ENGINE COOLANT LEVEL

Parts (if level is low):

- “Toyota Super Long Life Coolant” or similar high quality ethylene glycol based non–silicate, non–amine, non–nitrite, and non–borate coolant with long–life hybrid organic acid technology.

  “Toyota Super Long Life Coolant” is a mixture of 50% coolant and 50% deionized water (for the U.S.A.) or 55% coolant and 45% deionized water (for Canada).

Tools:

- Funnel (only for adding coolant)

CHECKING BRAKE FLUID

Parts (if level is low):

- SAE J1703 or FMVSS No.116 DOT 3 brake fluid

Tools:

- Rag or paper towel
- Funnel (only for adding fluid)

CHECKING POWER STEERING FLUID

Parts (if level is low):

- Automatic transmission fluid DEXRON®II or III

Tools:

- Rag or paper towel
- Funnel (only for adding fluid)

CHECKING BATTERY CONDITION

Tools:

- Warm water
- Baking soda
- Grease
- Conventional wrench (for terminal clamp bolts)

CHECKING AND REPLACING FUSES

Parts (if replacement is necessary):

- Fuse with same amperage rating as original

ADDING WASHER FLUID

Parts:

- Water
- Washer fluid containing antifreeze (for winter use)

Tools:

- Funnel

REPLACING LIGHT BULBS

Parts:

- Bulb with same number and wattage rating as original (See charts in “Replacing light bulbs” on page 394 in Section 7–3.)

Tools:

- Screwdriver

SECTION 7-2

DO-IT-YOURSELF MAINTENANCE

Engine and Chassis

Checking the engine oil level 376
Checking the engine coolant level 378
Checking the radiator and condenser 379
Checking brake fluid 380
Checking power steering fluid 381
Checking tire inflation pressure 381
Checking and replacing tires 384
Rotating tires 386
Installing snow tires and chains 386
Replacing wheels 388
Aluminum wheel precautions 388

Checking the engine oil level

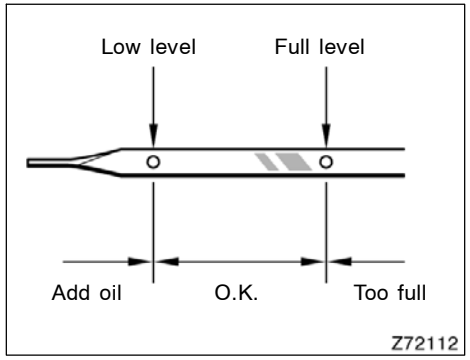

1GR−FE engine

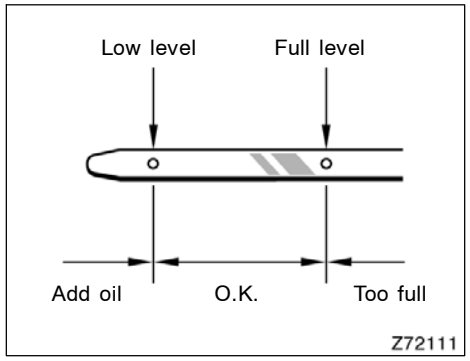

2UZ−FE engine

With the engine at operating temperature and turned off, check the oil level on the dipstick.

1. To get a correct reading, the vehicle should be on level ground. After turning off the engine, wait a few minutes for the oil to drain back into the bottom of the engine.
2. Pull the dipstick out, hold a rag under the end and wipe it clean.
3. Reinsert the dipstick—push it in as far as it will go, or the reading will not be correct.
4. Pull the dipstick out and look at the oil level while holding a rag under the end.

⚠ CAUTION

Be careful not to touch the hot exhaust manifold.

NOTICE

Be careful not to drop engine oil on the vehicle components.

If the oil level is below or only slightly above the low level, add engine oil of the same type as already in the engine.

Remove the oil filler cap and add engine oil in small quantities at a time, checking the dipstick. We recommend that you use a funnel when adding oil.

The approximate quantity of oil needed to raise the level between low and full on the dipstick is indicated as follows:
1.5 L (1.6 qt., 1.3 Imp. qt.)

For the engine oil capacity, see “Service specifications” on page 403 in Section 8.

When the level reaches within the correct range, install the filler cap hand−tight.

NOTICE

- ***Be careful not to spill engine oil on the vehicle components.***
- ***Avoid overfilling, or the engine could be damaged.***
- ***Check the oil level on the dipstick once again after adding the oil.***

ENGINE OIL SELECTION

“Toyota Genuine Motor Oil” is used in your Toyota vehicle. Use Toyota approved “Toyota Genuine Motor Oil” or equivalent to satisfy the following grade and viscosity.

Oil grade:
API grade SL “Energy–Conserving” or ILSAC multigrade engine oil

Recommended viscosity:
SAE 5W–30

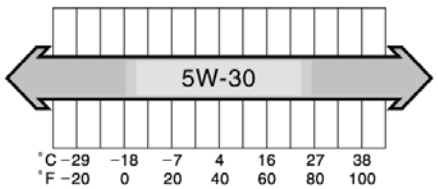

SAE 5W–30 is the best choice for good fuel economy and good starting in cold weather.

If SAE 5W–30 is not available, SAE 10W–30 may be used. However, it should be replaced with SAE 5W–30 at the next oil change.

EC-07

API service symbol

API-02

ILSAC certification mark

Oil identification marks

Either or both API registered marks are added to some oil containers to help you select the oil you should use.

The API Service Symbol is located anywhere on the outside of the container.

The top portion of the label shows the oil quality by API (American Petroleum Institute) designations such as SL. The center portion of the label shows the SAE viscosity grade such as SAE 5W–30. “Energy–Conserving” shown in the lower portion, indicates that the oil has fuel–saving capabilities.

The ILSAC (International Lubricant Standardization and Approval Committee) Certification Mark is displayed on the front of the container.

To ensure excellent lubrication performance for your engine, “Toyota Genuine Motor Oil” is available, which has been specifically tested and approved for all Toyota engines.

Please contact your Toyota dealer for further details about “Toyota Genuine Motor Oil”.

Checking the engine coolant level

Look at the see–through coolant reservoir when the engine is cold. The coolant level is satisfactory if it is between the “F” and “L” lines on the reservoir. If the level is low, add the coolant. (For the coolant type, see “Coolant type selection” described below.)

The coolant level in the reservoir will vary with engine temperature. However, if the level is on or below the “L” line, add coolant. Bring the level up to the “F” line.

If the coolant level drops within a short time after replenishing, there may be a leak in the system. Visually check the radiator, hoses, radiator cap and drain cock and water pump.

If you can find no leak, have your Toyota dealer test the cap pressure and check for leaks in the cooling system.

⚠ CAUTION

To prevent burning yourself, do not remove the radiator cap when the engine is hot.

Coolant type selection

Use of improper coolants may damage your engine cooling system.

Only use “Toyota Super Long Life Coolant” or similar high quality ethylene glycol based non–silicate, non–amine, non–nitrite, and non–borate coolant with long–life hybrid organic acid technology. (Coolant with long–life hybrid organic acid technology is a combination of low phosphates and organic acids.)

For the U.S.A.—“Toyota Super Long Life Coolant” is a mixture of 50% coolant and 50% deionized water. This coolant provides protection down to about –35°C (–31°F).

For Canada—“Toyota Super Long Life Coolant” is a mixture of 55% coolant and 45% deionized water. This coolant provides protection down to about –42°C (–44°F).

NOTICE
Do not use plain water alone.

Toyota recommends “Toyota Super Long Life Coolant”, which has been tested to ensure that it will not cause corrosion nor result in malfunction of your engine coolant system with proper usage. “Toyota Super Long Life Coolant” is formulated with long–life hybrid organic acid technology and has been specifically designed to avoid engine cooling system malfunction on Toyota vehicles.

Please contact your Toyota dealer for further details.

Checking the radiator and condenser

If any of the above parts are extremely dirty or you are not sure of their condition, take your vehicle to a Toyota dealer.

⚠ CAUTION
To prevent burning yourself, be careful not to touch the radiator or condenser when the engine is hot.

NOTICE
To prevent damage to the radiator and condenser, do not perform the work by yourself.

Checking brake fluid

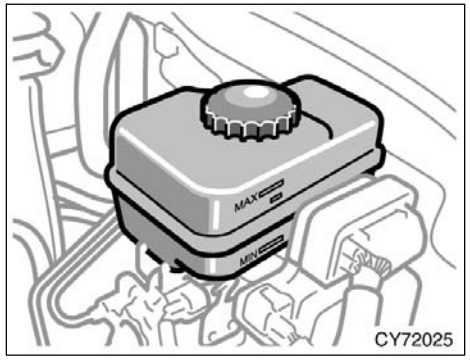

To check the fluid level, simply look at the see–through reservoir. The level should be between the “MAX” and “MIN” lines on the reservoir.

It is normal for the brake fluid level to go down slightly as the brake pads wear or when the fluid level in the accumulator is high.

If the reservoir needs frequent refilling, it may indicate a serious mechanical problem.

If the level is low, add SAE J1703 or FMVSS No.116 DOT 3 brake fluid to the brake reservoir.

Refilling brake fluid:

1. Turn the ignition switch off.
2. Depress the brake pedal more than 20 times (until the brake pedal resistance decreases and pedal travel increases).
3. Remove the reservoir cover by hand. Add brake fluid up to the “MAX” line.

If you do not follow the procedure above, the reservoir may overflow.

Use only newly opened brake fluid. Once opened, brake fluid absorbs moisture from the air, and excess moisture can cause a dangerous loss of braking.

⚠ CAUTION

Take care when filling the reservoir because brake fluid can harm your hands or eyes. If fluid gets on your hands or in your eyes, flush the affected area with clean water immediately. If you still feel uncomfortable with your hands or eyes, go to the doctor.

NOTICE

If you spill some of the fluid, be sure to wipe it off to prevent it from damaging the parts or paintwork.

Checking power steering fluid

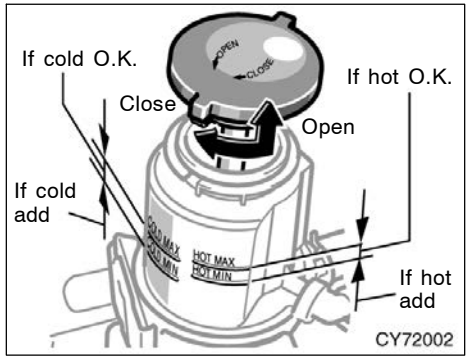

Check the fluid level through the reservoir. If necessary, add automatic transmission fluid DEXRON®II or III.

If the vehicle has been driven around 80 km/h (50 mph) for 20 minutes (a little more in frigid temperatures), the fluid is hot (60°C—80°C or 140°F—175°F). You may also check the level when the fluid is cold (about room temperature, 10°C—30°C or 50°F—85°F) if the engine has not been run for about five hours.

Clean all dirt from the outside of the reservoir tank and look at the fluid level. If the fluid is cold, the level should be in the “COLD” range. Similarly, if it is hot, the fluid level should be in the “HOT” range. If the level is at the low side of either range, add automatic transmission fluid DEXRON®II or III to bring the level within the range.

To remove the reservoir cap, turn it counterclockwise and lift up. To reinstall it, turn it clockwise. After replacing the reservoir cap, visually check the steering box case, vane pump and hose connections for leaks or damage.

⚠ CAUTION

The reservoir tank may be hot so be careful not to burn yourself.

NOTICE

Avoid overfilling, or the power steering could be damaged.

Checking tire inflation pressure

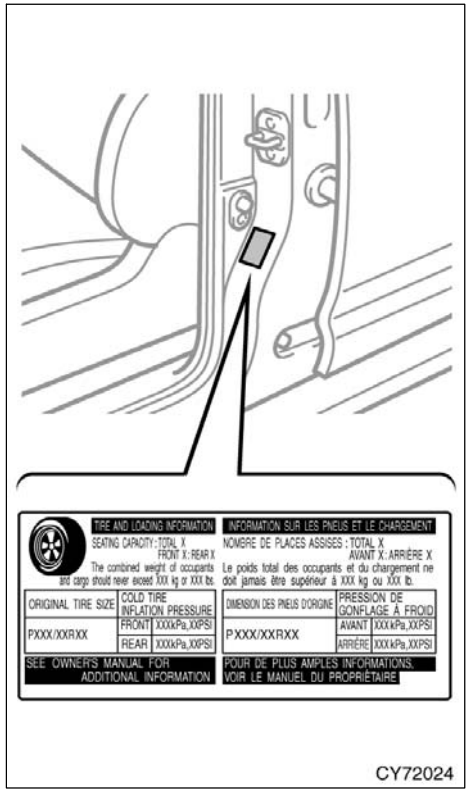

Keep your tire inflation pressures at the proper level.

The recommended cold tire inflation pressures, tire sizes and the combined weight of occupants and cargo (vehicle capacity weight) are described on pages 402 and 406. They are also on the tire and loading information label.

You should check the tire inflation pressure every two weeks, or at least once a month. And do not forget the spare!

The following instructions for checking tire inflation pressure should be observed:

- **The pressure should be checked only when the tires are cold.** If your vehicle has been parked for at least 3 hours and has not been driven for more than 1.5 km or 1 mile since, you will get an accurate cold tire inflation pressure reading.
- **If you cannot adjust the tire pressure when the tires are cold,** add 20 to 30 kPa more to the front tires and rear tires than the cold tire pressure, but never exceed the maximum cold tire pressure molded on the tire sidewall.
- **Always use a tire pressure gauge.** The appearance of a tire can be misleading. Besides, tire inflation pressures that are even just a few pounds off can degrade ride and handling.
- **Do not bleed or reduce tire inflation pressure after driving.** It is normal for the tire inflation pressure to be higher after driving.
- **Never exceed the vehicle capacity weight.** Passenger and luggage weight should be located so that the vehicle is balanced.

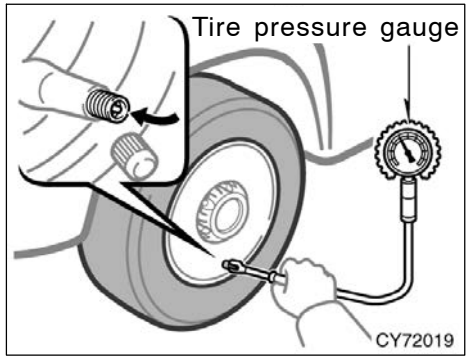

INSPECTION AND ADJUSTMENT PROCEDURE

1. Remove the tire valve cap.
2. Press the tip of the tire pressure gauge to the tire valve.
3. Read the pressure using the graduations of the gauge.
4. In case the tire inflation pressure is not within the prescribed range, insert the compressed air from the valve. In case of applying too much air, press the center of the valve and release the air to adjust.

5. After completing the tire inflation pressure measurement and adjustment, apply soapy water to the valve and check for leakage.
6. Install the tire valve cap.

If a gauge and air pump are not available, have your vehicle checked by your Toyota dealer.

⚠ CAUTION

Be sure to reinstall the tire valve caps. Without the valve caps, dirt or moisture could get into the valve core and cause air leakage. If the caps have been lost, have new ones put on as soon as possible.

NOTICE

Use only the original valve cap. If any other valve cap is used, it may corrode or melt and become difficult or impossible to remove.

Incorrect tire inflation pressure may waste fuel, reduce the comfort of driving, reduce tire life and make your vehicle less safe to drive.

If a tire frequently needs refilling, have it checked by your Toyota dealer.

⚠ CAUTION

Keep your tires properly inflated. Otherwise, the following conditions may occur and cause an accident resulting in death or serious injuries.

Low tire pressure (underinflation)—

- **Excessive wear**
- **Uneven wear**
- **Poor handling**
- **Possibility of blowouts from an overheated tire**
- **Poor sealing of the tire bead**
- **Wheel deformation and/or tire separation**
- **A greater possibility of tire damage from road hazards**

High tire pressure (overinflation)—

- **Poor handling**
- **Excessive wear**
- **Uneven wear**
- **A greater possibility of tire damage from road hazards**

Checking and replacing tires

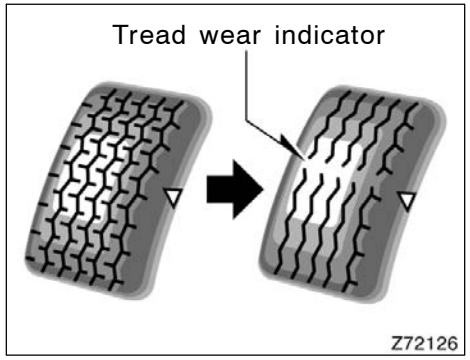

CHECKING YOUR TIRES

Check the tire’s tread for tread wear indicators. If the indicators show, replace the tires. The location of tread wear indicators is shown by the “TWI” or “∆” marks, etc., molded on the sidewall of each tire.

The tires on your Toyota have built–in tread wear indicators to help you know when the tires need replacement. When the tread depth wears to 1.6 mm (0.06 in.) or less, the indicators will appear. If you can see the indicators in two or more adjacent grooves, the tire should be replaced. The lower the tread, the higher the risk of skidding.

The effectiveness of snow tires is lost if the tread wears down below 4 mm (0.16 in.).

If you have tire damage such as cuts, splits, cracks deep enough to expose the fabric, or bulges indicating internal damage, the tire should be replaced.

If a tire often goes flat or cannot be properly repaired due to the size or location of a cut or other damage, it should be replaced. If you are not sure, consult with your Toyota dealer.

If air loss occurs while driving, do not continue driving. Driving even a short distance can damage a tire beyond repair.

Any tires which are over 6 years old must be checked by a qualified technician even if damage is not obvious.

Tires deteriorate with age even if they have never or seldom been used.

This applies also to the spare tire and tires stored for future use.

REPLACING YOUR TIRES

When replacing a tire, use a tire of the same size and construction, and the same or greater maximum load as the originally installed tires. Also, on four−wheel drive models, all the tires must be the same brand and have the same tread patterns.

Using any other size or type of tire may seriously affect handling, ride, speedometer/odometer calibration, ground clearance, and clearance between the body and tires or snow chains.

Check that the maximum load of the replaced tire is greater than 1/2 of the Gross Axle Weight Ratings (GAWR) of either the front axle or the rear axle, whichever is greater. As for the maximum load of the tire, see the load limit at maximum cold tire inflation pressure mentioned on the sidewall of the tire, and as for the Gross Axle Weight Ratings (GAWR), see the Certification Label.

For details about the side wall of the tire and the Certification Label, see pages 293 and 296.

⚠ CAUTION

Observe the following instructions. Otherwise, an accident may occur resulting in death or serious injuries.

- **Do not mix radial, bias belted, or bias−ply tires on your vehicle, as this may cause dangerous handling characteristics resulting in loss of control.**
- **Do not use tires other than the manufacturer’s recommended size, as this may cause dangerous handling characteristics resulting in loss of control.**
- **Four−wheel drive models: Do not use tires of different brands, sizes, construction or tread patterns, as this may cause dangerous handling characteristics resulting in loss of control.**

Toyota recommends all four tires, or at least both of the front or rear tires be replaced at a time as a set.

See “If you have a flat tire” on page 335 for tire change procedure.

When a tire is replaced, the wheel should always be balanced.

An unbalanced wheel may affect vehicle handling and tire life. Wheels can get out of balance with regular use and should therefore be balanced occasionally.

When replacing a tubeless tire, the air valve should also be replaced with a new one.

Rotating tires

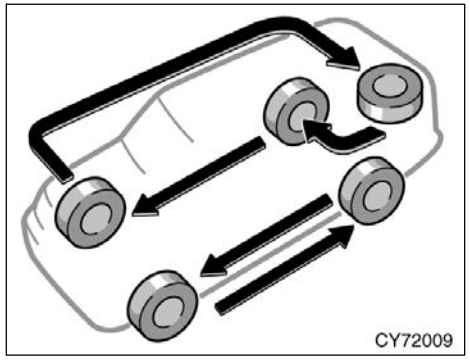

To equalize the wear and help extend tire life, Toyota recommends that you rotate your tires according to the maintenance schedule. (For scheduled maintenance information, please refer to the “Scheduled Maintenance Guide” or “Owner’s Manual Supplement”.) However, the most appropriate timing for tire rotation may vary according to your driving habits and road surface conditions.

See “If you have a flat tire” on page 335 in Section 4 for tire change procedure.

When rotating tires, check for uneven wear and damage. Abnormal wear is usually caused by incorrect tire pressure, improper wheel alignment, out–of–balance wheels, or severe braking.

Installing snow tires and chains

WHEN TO USE SNOW TIRES OR CHAINS

Snow tires or chains are recommended when driving on snow or ice.

On wet or dry roads, conventional tires provide better traction than snow tires.

SNOW TIRE SELECTION

If you need snow tires, select tires of the same size, construction and load capacity as the originally installed tires. Also, on four–wheel drive models, all the tires must be the same brand and have the same tread patterns.

Do not use tires other than those mentioned above. Do not install studded tires without first checking local regulations for possible restrictions.

⚠ CAUTION

Observe the following instructions. Otherwise, an accident may occur resulting in death or serious injuries.

- **Do not use snow tires other than the manufacturer’s recommended size, as this may cause dangerous handling characteristics resulting in loss of control.**

- **Four−wheel drive models:**
  Do not use snow tires of different brands, sizes, construction or tread patterns, as this may cause dangerous handling characteristics resulting in loss of control.

SNOW TIRE INSTALLATION

Snow tires should be installed on all wheels.

Installing snow tires on the front wheels only can lead to an excessive difference in road grip capability between the front and rear tires which could cause loss of vehicle control.

When storing removed tires, you should store them in a cool dry place.

Mark the direction of rotation and be sure to install them in the same direction when replacing.

CAUTION

- **Do not drive with the snow tires incorrectly inflated.**
- **Never drive over 120 km/h (75 mph) with any type of snow tires.**

TIRE CHAIN SELECTION

Use the tire chains of correct size.

Regulations regarding the use of tire chains vary according to location or type of road, so always check local regulations before installing chains.

CHAIN INSTALLATION

Install the chains on the rear tires as tightly as possible. Do not use tire chains on the front tires. Retighten chains after driving 0.5—1.0 km (1/4—1/2 mile).

When installing chains on your tires, carefully follow the instructions of the chain manufacturer.

If wheel covers are used, they will be scratched by the chain band, so remove the covers before putting on the chains.

CAUTION

- **Do not exceed 50 km/h (30 mph) or the chain manufacturer’s recommended speed limit, whichever is lower.**
- **Drive carefully avoiding bumps, holes, and sharp turns, which may cause the vehicle to bounce.**
- **Avoid sharp turns or locked−wheel braking, as use of chains may adversely affect vehicle handling.**
- **When driving with chains installed, be sure to drive carefully. Slow down before entering curves to avoid losing control of the vehicle. Otherwise an accident may occur.**

Replacing wheels

WHEN TO REPLACE YOUR WHEELS

If you have wheel damage such as bending, cracks or heavy corrosion, the wheel should be replaced.

If you fail to replace a damaged wheel, the tire may slip off the wheel or cause loss of handling control.

WHEEL SELECTION

When replacing wheels, care should be taken to ensure that the wheels are replaced by ones with the same load capacity, diameter, rim width, and offset.

Correct replacement wheels are available at your Toyota dealer.

A wheel of a different size or type may adversely affect handling, wheel and bearing life, brake cooling, speedometer/odometer calibration, stopping ability, headlight aim, bumper height, vehicle ground clearance, and tire or snow chain clearance to the body and chassis.

Replacement with used wheels is not recommended as they may have been subjected to rough treatment or high mileage and could fail without warning. Also, bent wheels which have been straightened may have structural damage and therefore should not be used. Never use an inner tube in a leaking wheel which is designed for a tubeless tire.

⚠ CAUTION

Observe the following instructions. Otherwise, an accident may occur resulting in death or serious injuries.

- **Do not use wheels other than the manufacturer’s recommended size, as this may cause dangerous handling characteristics resulting in loss of control.**
- **Four–wheel drive models:**
  Do not use wheels of different brands, sizes and types, as this may cause dangerous handling characteristics resulting in loss of control.

Aluminum wheel precautions

- When installing aluminum wheels, check that the wheel nuts are tight after driving your vehicle the first 1600 km (1000 miles).
- If you have rotated, repaired or changed your tires, check that the wheel nuts are still tight after driving 1600 km (1000 miles).
- When using tire chains, be careful not to damage the aluminum wheels.
- Use only Toyota wheel nuts and wrench designed for your aluminum wheels.
- When balancing your wheels, use only Toyota balance weights or equivalent and a plastic or rubber hammer.
- As with any wheel, periodically check your aluminum wheels for damage. If damaged, replace immediately.

SECTION 7–3

DO–IT–YOURSELF MAINTENANCE

Electrical components

Checking battery condition 390
Battery recharging precautions 391
Checking and replacing fuses 392
Adding washer fluid 393
Replacing light bulbs 394

Checking battery condition——Precautions

⚠ CAUTION

BATTERY PRECAUTIONS

The battery produces flammable and explosive hydrogen gas.

- **Do not cause a spark from the battery with tools.**
- **Do not smoke or light a match near the battery.**

The electrolyte contains poisonous and corrosive sulfuric acid.

- **Avoid contact with eyes, skin or clothes.**
- **Never ingest electrolyte.**
- **Wear protective safety glasses when working near the battery.**
- **Keep children away from the battery.**

EMERGENCY MEASURES

- **If electrolyte gets in your eyes, flush your eyes with clean water immediately and get immediate medical attention. If possible, continue to apply water with a sponge or cloth while en route to the medical office.**
- **If electrolyte gets on your skin, thoroughly wash the contact area. If you feel pain or burning, get medical attention immediately.**
- **If electrolyte gets on your clothes, there is a possibility of its soaking through to your skin, so immediately take off the exposed clothing and follow the procedure above, if necessary.**
- **If you accidentally swallow electrolyte, drink a large quantity of water or milk. Follow with milk of magnesia, beaten raw egg or vegetable oil. Then go immediately for emergency help.**

—Checking battery exterior

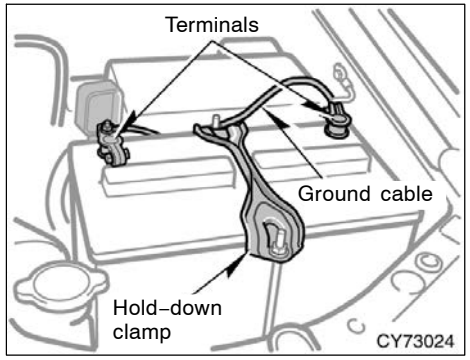

Check the battery for corroded or loose terminal connections, cracks, or loose hold–down clamp.

a. If the battery is corroded, wash it off with a solution of warm water and baking soda. Coat the outside of the terminals with grease to prevent further corrosion.

b. If the terminal connections are loose, tighten their clamp nuts—but do not overtighten.

c. Tighten the hold–down clamp only enough to keep the battery firmly in place. Overtightening may damage the battery case.

NOTICE

- ***Be sure the engine and all accessories are off before performing maintenance.***
- ***When checking the battery, remove the ground cable from the negative terminal (“–” mark) first and reinstall it last.***
- ***Be careful not to cause a short circuit with tools.***
- ***Take care no solution gets into the battery when washing it.***

If the battery is disconnected or run down, the power window, power back window and moon roof may not operate automatically and the jam protection function will not function correctly, and does not open the back door after you reconnect, replace or recharge the battery. In any of these cases, you should normalize the power window, power back window, back door and moon roof. To normalize them, see “Power windows” on page 27, “Power back window” on page 30, “Back door” on page 32 and “Electric moon roof” on page 38 in Section 1–2.

—Checking battery condition

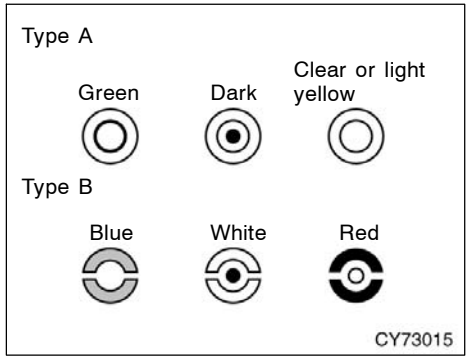

CHECKING BY INDICATOR

Check the battery condition by the indicator color.

Indicator color		Condition
Type A	Type B	
Green	Blue	Good
Dark	White	Charging necessary. Have battery checked by your Toyota dealer.
Clear or light yellow	Red	Have battery checked by your Toyota dealer.

Battery recharging precautions

During recharging, the battery is producing hydrogen gas.

Therefore, before recharging:

1. If recharging with the battery installed on the vehicle, be sure to disconnect the ground cable.
2. Be sure the power switch on the recharger is off when connecting the charger cables to the battery and when disconnecting them.

⚠ CAUTION

- **Always charge the battery in an unconfined area. Do not charge the battery in a garage or closed room where there is not sufficient ventilation.**
- **Only do a slow charge (5 A or less). Charging at a quicker rate is dangerous. The battery may explode, causing personal injuries.**

NOTICE

Never recharge the battery while the engine is running. Also, be sure all accessories are turned off.

Checking and replacing fuses

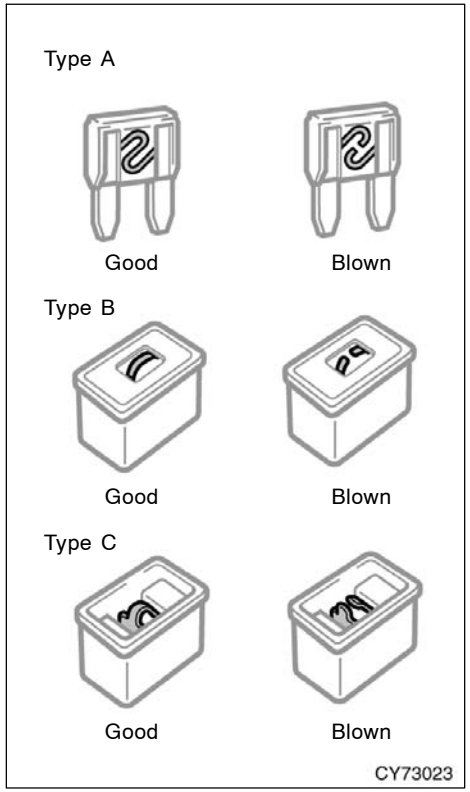

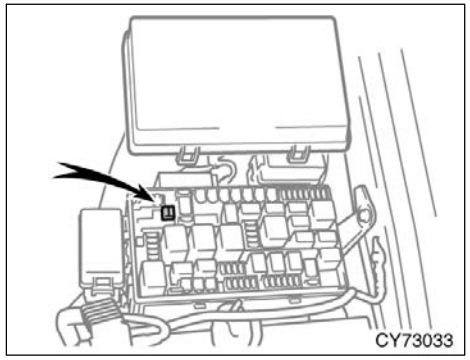

If the headlights or other electrical components do not work, check the fuses. If any of the fuses are blown, they must be replaced.

See “Fuse locations” on page 370 in Section 7–1 for locations of the fuses.

Turn the ignition switch and inoperative component off. Pull the suspected fuse straight out and check it.

Determine which fuse may be causing the problem. The lid of the fuse box shows the name of the circuit for each fuse. See page 406 in Section 8 for the functions controlled by each circuit.

Type A fuses can be pulled out by using the pull–out tool. The location of the pull–out tool is shown in the illustration.

If you are not sure whether the fuse has blown, try replacing the suspected fuse with one that you know is good.

If the fuse has blown, push a new fuse into the clip.

Only install a fuse with the amperage rating designated on the fuse box lid.

If you do not have a spare fuse, in an emergency you can pull out the “PWR OUTLET” or “HEATER NO.2” fuse, which may be dispensable for normal driving, and use it if its amperage rating is the same.

If you cannot use one of the same amperage, use one that is lower, but as close to the rating as possible. If the amperage is lower than that specified, the fuse might blow out again but this does not indicate anything wrong. Be sure to get the correct fuse as soon as possible and return the substitute to its original clip.

It is a good idea to purchase a set of spare fuses and keep them in your vehicle for emergencies.

If the new fuse immediately blows out, there is a problem with the electrical system. Have your Toyota dealer correct it as soon as possible.

⚠ CAUTION

Never use a fuse with a higher amperage rating, or any other object, in place of a fuse. This may cause extensive damage and possibly a fire.

Adding washer fluid

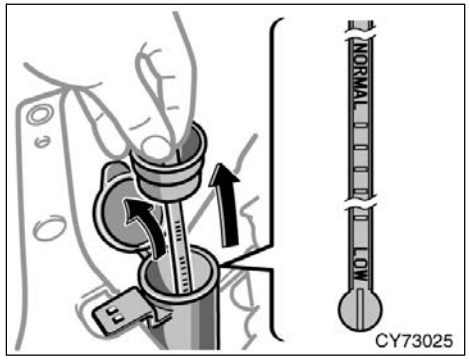

If any washer does not work, the washer tank may be empty. Check the washer fluid level on the level gauge. If the washer fluid level is below “LOW” or only slightly above the “LOW” level, add washer fluid.

For vehicles sold in Canada—
If any washer does not work or low windshield washer fluid level warning light comes on, the washer tank may be empty. Add washer fluid.

You may use plain water as washer fluid. However, in cold areas where temperatures range below the freezing point, use washer fluid containing antifreeze. This product is available at your Toyota dealer and most auto parts stores. Follow the manufacturer’s directions for how much to mix with water.

NOTICE

Do not use engine antifreeze or any other substitute because it may damage your vehicle’s paint.

Replacing light bulbs—

The following illustrations show how to gain access to the bulbs. When replacing a bulb, make sure the ignition switch and light switch are off. Use bulbs with the wattage ratings given in the table.

⚠ CAUTION

- **To prevent burning yourself, do not replace the light bulbs while they are hot.**
- **Halogen bulbs have pressurized gas inside and require special handling. They can burst or shatter if scratched or dropped. Hold a bulb only by its plastic or metal case. Do not touch the glass part of a bulb with bare hands.**

NOTICE

Only use a bulb of the listed type.

The inside of the lens of exterior lights such as headlights may temporarily fog up when the lens becomes wet in the rain or in a car wash. This is not a problem because the fogging is caused by the temperature difference between the outside and inside of the lens, just like the windshield fogs up in the rain. However, if there is a large drop of water on the inside of the lens, or if there is water pooled inside the light, contact your Toyota dealer.

Light bulbs	Bulb No.	W	Type
Headlights (high beam)	9005	60	A
Headlights (high and low beams)	9006	51	B
Front fog lights	9006	51	B
Parking and front side marker lights	168	5	D
Front turn signal lights (without daytime running light system)	—	21	D
Front turn signal lights (with daytime running light system)	4157NAK	27/8	D
Rear turn signal lights	—	21	D
Stop/tail and rear side marker lights	—	21/5	C
Back–up lights	921	16	C
License plate lights	168	5	C
High mounted stoplight	921	16	C
Interior light	—	8	E
Personal lights	—	5	C
Vanity lights	—	3	E
Door courtesy lights	—	3.8	C
Glove box light	—	1.2	C
Luggage compartment light	—	8	E
Running board lights	—	3.8	C

A: HB3 halogen bulbs
B: HB4 halogen bulbs
C: Wedge base bulbs (clear)
D: Wedge base bulbs (amber)
E: Double end bulbs

—Headlights

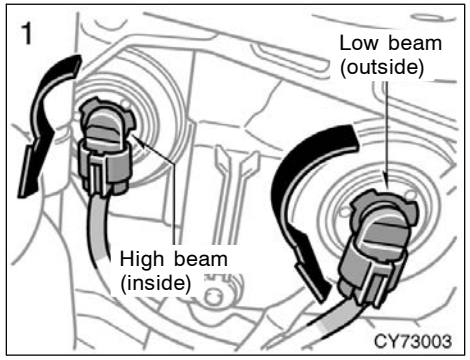

1. Turn the bulb base counterclockwise to the front of the vehicle as shown.

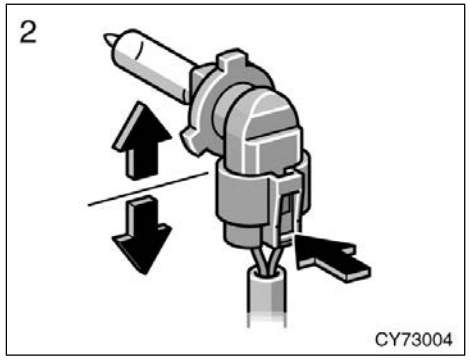

2. Unplug the connector while depressing the lock release.

If the connector is tight, wiggle it.

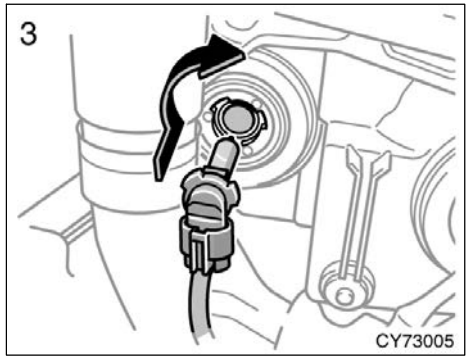

3. Install a new bulb and connector into the mounting hole and turn them clockwise to the front of the vehicle.

Aiming is not necessary after replacing the bulb. When aiming adjustment is necessary, contact your Toyota dealer.

—Front fog lights

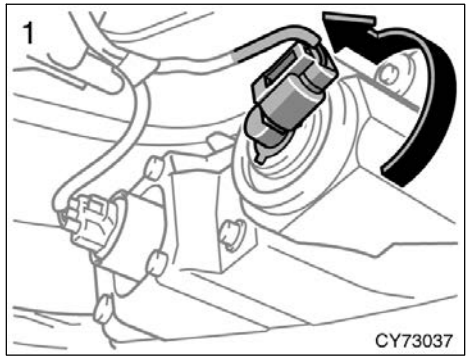

1. Turn the bulb base counterclockwise to the front of the vehicle as shown.

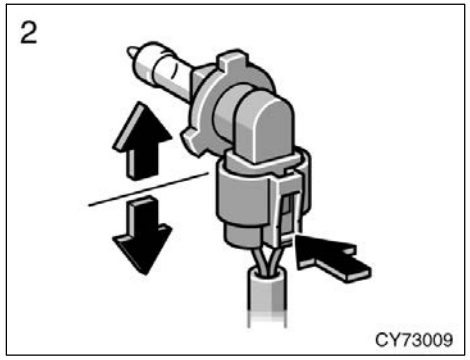

2. Unplug the connector while depressing the lock release.

If the connector is tight, wiggle it.

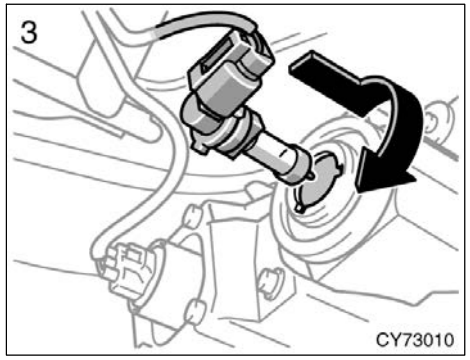

3. Install a new bulb and connector into the mounting hole and turn them clockwise to the front of the vehicle.

—Parking and front side marker lights

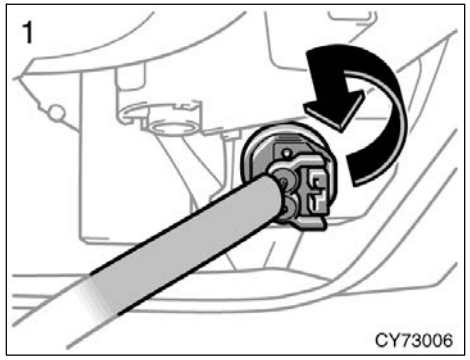

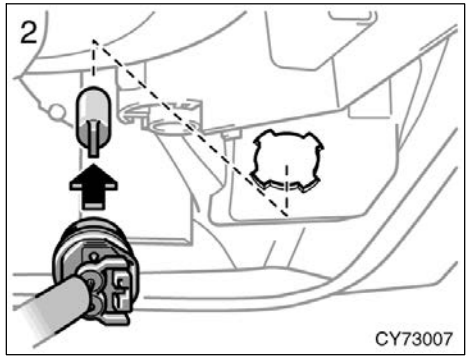

—Front turn signal lights

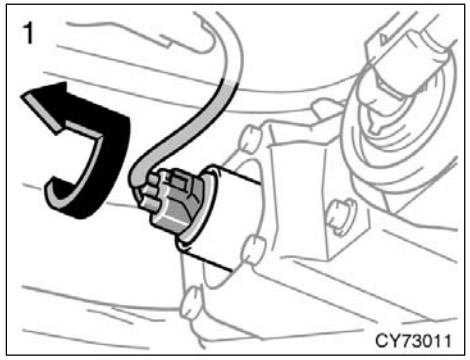

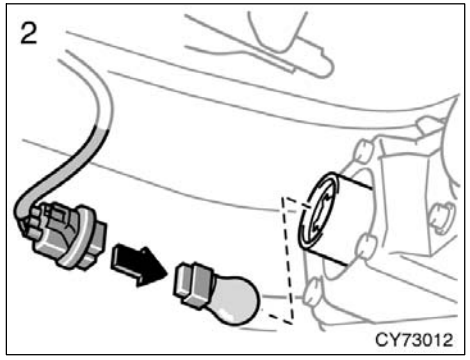

—Rear turn signal, stop/tail, rear side marker and back−up lights

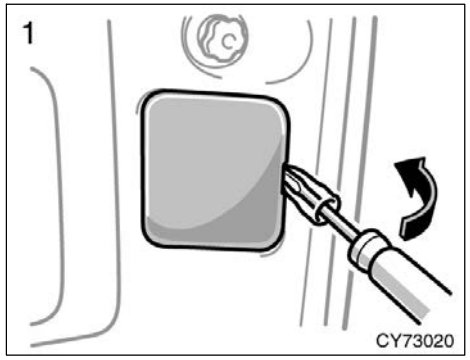

Use a flathead screwdriver which is wrapped with a cloth.

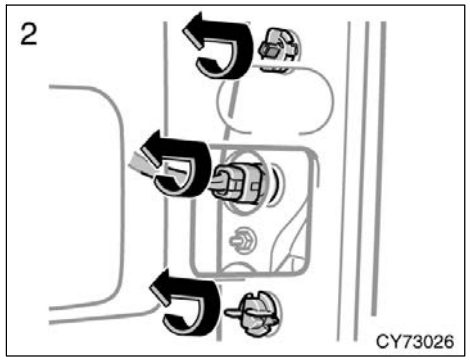

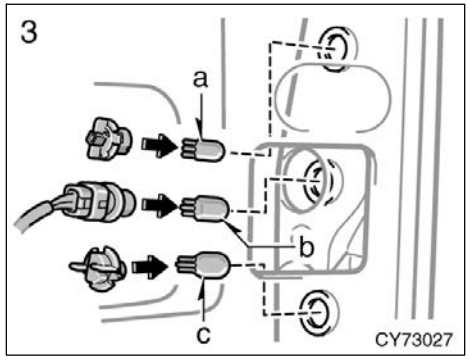

a: Rear turn signal light
b: Stop/tail and rear side marker light
c: Back−up light

—License plate lights

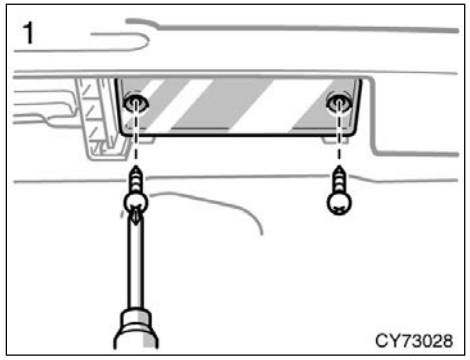

Use a Phillips−head screwdriver.

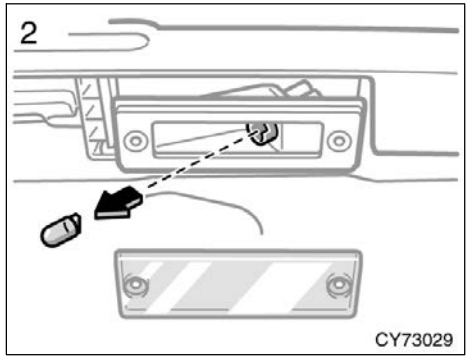

—High mounted stoplight

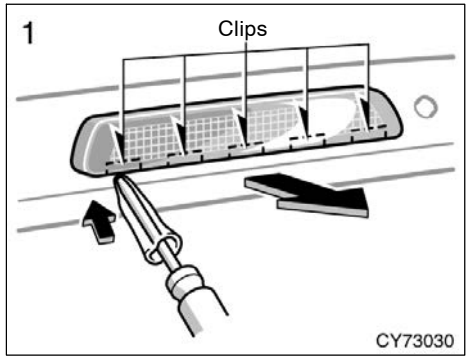

Disconnect the clips by using a flat−bladed screwdriver which is wrapped with a cloth.

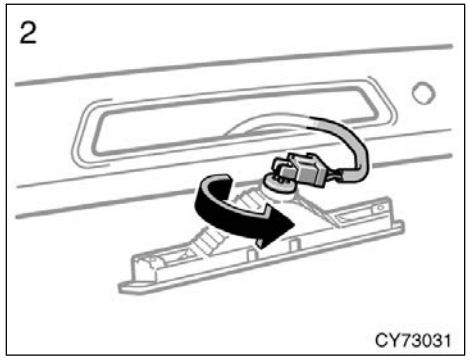
2
CY73031

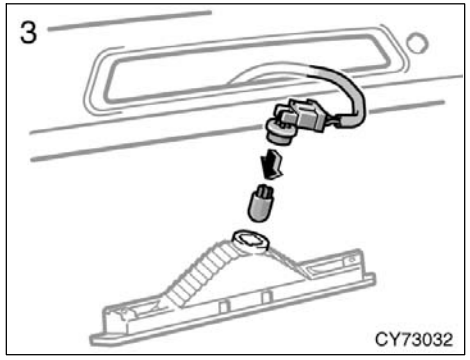
3
CY73032

SECTION 8

SPECIFICATIONS

Dimensions and weights 402
Engine 403
Fuel 403
Service specifications 403
Tires 406
Fuses 406

Dimensions and weights

Overall length	mm (in.)	4800 (189.0)
Overall width	mm (in.)	1875 (73.8)
Overall height*1	mm (in.)	1820 (71.7)*2 or 3, 4 1800 (70.9)*2, 3, 5 1755 (69.1)*2, 3 1805 (71.1)*2 or 3, 4, 6 1785 (70.3)*2 or 3, 5, 6 1740 (68.5)*2 or 3, 6
Wheelbase	mm (in.)	2790 (109.8)
Front tread	mm (in.)	1575 (62.0)
Rear tread	mm (in.)	1575 (62.0)
Vehicle capacity weight (occupants + luggage)	kg (lb.)	431 (950)*7 476 (1050)*8
Luggage compartment load capacity	kg (lb.)	91 (200)*7 0 (0)*8

*1: Unladen vehicle
*2: With two–wheel drive models
*3: With four–wheel drive models
*4: With roof rails
*5: With rear spoiler
*6: With rear height control air suspension
*7: With 5 occupants
*8: With 7 occupants

Towing capacity (trailer weight + cargo weight), kg (lb.):

For weight carrying hitch 2268 (5000)

Also for weight distributing hitch

1GR–FE engine

Two–wheel drive models 3042 (6700)

Four–wheel drive models 2906 (6400)

2UZ–FE engine

Two–wheel drive models 3311 (7300)

Four–wheel drive models 3175 (7000)

Engine

Model:
1GR–FE and 2UZ–FE

Type:
1GR–FE engine
6 cylinder V type, 4 cycle, gasoline
2UZ–FE engine
8 cylinder V type, 4 cycle, gasoline

Bore and stroke, mm (in.):
1GR–FE engine
94.0 × 95.0 (3.70 × 3.74)
2UZ–FE engine
94.0 × 84.0 (3.70 × 3.31)

Displacement, cm^3 (cu. in.):

1GR–FE engine	3956 (241.4)
2UZ–FE engine	4664 (284.6)

Fuel

Fuel type:
Unleaded gasoline, Octane Rating 87 (Research Octane Number 91) or higher. For improved vehicle performance, the use of premium unleaded gasoline with an Octane Rating of 91 (Research Octane Number 96) or higher is recommended.

Fuel tank capacity, L (gal., Imp. gal.):
87 (23.0, 19.1)

Service specifications

ENGINE

Valve clearance (engine cold), mm (in.):

1GR–FE engine		
Intake	0.15—0.25	(0.006—0.010)
Exhaust	0.29—0.39	(0.011—0.015)
2UZ–FE engine		
Intake	0.15—0.25	(0.006—0.010)
Exhaust	0.25—0.35	(0.010—0.014)

Spark plug type:

1GR–FE engine	
DENSO	K20HR–U11
NGK	LFR6C11
2UZ–FE engine	
DENSO	SK20R11
NGK	IFR6A11

Spark plug gap, mm (in.):
1.1 (0.043)

ENGINE LUBRICATION

Oil capacity (drain and refill), L (qt., Imp. qt.):

1GR–FE engine	
With filter	5.2 (5.5, 4.6)
Without filter	4.9 (5.2, 4.3)
2UZ–FE engine	
With filter	6.2 (6.5, 5.5)
Without filter	5.7 (6.0, 5.0)

“Toyota Genuine Motor Oil” is used in your Toyota vehicle. Use Toyota approved “Toyota Genuine Motor Oil” or equivalent to satisfy the following grade and viscosity.

Oil grade:
API grade SL “Energy–Conserving” or ILSAC multigrade engine oil

Recommended oil viscosity:
SAE 5W–30

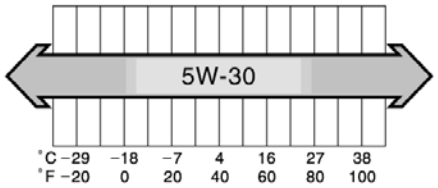

Outside temperature

OIL008

Please contact your Toyota dealer for further details.

COOLING SYSTEM

Total capacity, L (qt., Imp. qt.):

1GR–FE engine	9.8 (10.4, 8.6)
2UZ–FE engine	12.3 (13,0, 10.8)

Coolant type:

“Toyota Super Long Life Coolant” is used in your Toyota vehicle at factory fill. In order to avoid technical problems, only use “Toyota Super Long Life Coolant” or similar high quality ethylene glycol based non–silicate, non–amine, non–nitrite, and non–borate coolant with long–life hybrid organic acid technology. (Coolant with long–life hybrid organic acid technology is a combination of low phosphates and organic acids.)

Do not use plain water alone.

Please contact your Toyota dealer for further details.

BATTERY

Open voltage* at 20°C (68°F):

12.6—12.8 V	Fully charged
12.2—12.4 V	Half charged
11.8—12.0 V	Discharged

*: Voltage that is checked 20 minutes after the key is removed with all the lights turned off

Charging rates:
5 A max.

AUTOMATIC TRANSMISSION

Fluid capacity (drain and refill), L (qt., Imp. qt.):
Up to 3.0 (3.2, 2.6)

Fluid type:
Toyota Genuine ATF WS

Change automatic transmission fluid only as necessary.

Generally, it is necessary to change automatic transmission fluid only if your vehicle is driven under one of the Special Operating Conditions listed in your “Scheduled Maintenance Guide” or “Owner’s Manual Supplement”. When changing the automatic transmission fluid, use only “Toyota Genuine ATF WS” (ATF JWS3324 or NWS9638) to aid in assuring optimum transmission performance.

Notice: Using automatic transmission fluid other than “Toyota Genuine ATF WS” may cause deterioration in shift quality, locking up of your transmission accompanied by vibration, and ultimately damage the automatic transmission of your vehicle.

Please contact your Toyota dealer for further details.

TRANSFER

Oil capacity, L (qt., Imp. qt.):
1.4 (1.5, 1.2)

Oil type:
Hypoid gear oil API GL–5

Recommended oil viscosity:
SAE 75W–90

DIFFERENTIAL (1GR–FE engine)

Oil capacity, L (qt., Imp. qt.):

Two–wheel drive models
3.05 (3.2, 2.7)

Four–wheel drive models
Front 1.5 (1.6, 1.3)
Rear 3.05 (3.2, 2.7)

Oil type:
Hypoid gear oil API GL–5

Recommended oil viscosity:
Front
SAE 75W–90

Rear
Above –18°C (0°F)
SAE 90
Below –18°C (0°F)
SAE 80W or 80W–90

DIFFERENTIAL (2UZ–FE engine)

Oil capacity, L (qt., Imp. qt.):

Two–wheel drive models
3.05 (3.2, 2.7)

Four–wheel drive models
Front 1.4 (1.5, 1.2)
Rear 3.05 (3.2, 2.7)

Oil type:
Hypoid gear oil API GL–5

Recommended oil viscosity:

Above –18°C (0°F)
SAE 90
Below –18°C (0°F)
SAE 80W or 80W–90

CHASSIS LUBRICATION

Propeller shafts:

Spiders
Lithium base chassis grease, NLGI No.2

Slide yokes
Molybdenum–disulfide lithium base chassis grease, NLGI No.2 or lithium base multipurpose grease, NLGI No.2

BRAKES

Minimum pedal clearance when depressed with the force of 490 N (50 kgf, 110 lbf) with the engine running, mm (in.):
54 (2.1)

Pedal free play, mm (in.):
1—6 (0.04—0.24)

Pad wear limit, mm (in.):
1.0 (0.04)

Lining wear limit, mm (in.):
1.0 (0.04)

Parking brake adjustment when depressed with the force of 294 N (30 kgf, 66.1 lbf):
5—7 clicks

Fluid type:
SAE J1703 or FMVSS No.116 DOT 3

STEERING

Wheel free play:
Less than 30 mm (1.2 in.)

Power steering fluid type:
Automatic transmission fluid DEXRON®II or III

Tires

Tire size, cold tire inflation pressure and wheel size:

Tire size	Cold tire inflation pressure kPa (kgf/cm^2 or bar, psi)		Wheel size
	Front	Rear	
P265/70R16 111S	220 (2.2, 32)	220 (2.2, 32)	16 × 7J*1 16 × 7JJ*2
P265/65R17 110S	220 (2.2, 32)	220 (2.2, 32)	17 × 7 1/2JJ

*1: Vehicles with steel wheels
*2: Vehicles with aluminum wheels

NOTE: For a complete information on tires (e.g. replacing tires or replacing wheels), see “Checking tire inflation pressure” through “Aluminum wheel precautions”, pages 381 through 388 in Section 7–2.

Wheel nut torque, N·m (kgf·m, ft·lbf):
110 (11.5, 83)

Fuses

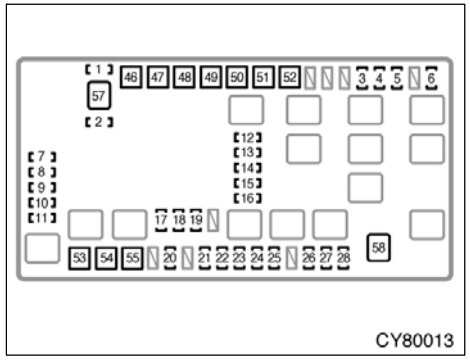

Engine compartment

Fuses (type A)

1. **SPARE 10 A:** Spare fuse
2. **SPARE 15 A:** Spare fuse
3. **STOP 10 A:** Stop/tail lights, high mounted stoplight, shift lock control system, anti–lock brake system, traction control system (two–wheel drive models), active traction control system (four–wheel drive models), vehicle stability control system, rear height control air suspension, multiport fuel injection system/sequential multiport fuel injection system, trailer brake controller, trailer lights (tail lights)

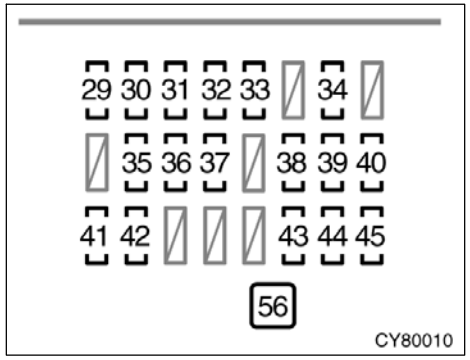

Instrument panel

4. **AC115V INV 15 A:** AC inverter
5. **FR FOG 15 A:** Front fog lights
6. **OBD 7.5 A:** On–board diagnosis system
7. **HEAD (LO RH) 10 A:** Right–hand headlight (low beam)
8. **HEAD (LO LH) 10 A:** Left–hand headlight (low beam)
9. **HEAD (HI RH) 10 A:** Right–hand headlight (high beam)
10. **HEAD (HI LH) 10 A:** Left–hand headlight (high beam)
11. **EFI NO.2 10 A:** Multiport fuel injection system/sequential multiport fuel injection system
12. **HEATER NO.2 7.5 A:** Air conditioning system
13. **AIRSUS NO.2 10 A:** Rear height control air suspension
14. **SEAT HEATER 25 A:** Seat heaters
15. **DEFOG 30 A:** Back window defogger, multiport fuel injection system/sequential multiport fuel injection system
16. **MIR HEATER 10 A:** Outside rear view mirror heater
17. **DOME 10 A:** Interior light, personal lights, wireless remote control system, door courtesy lights, rear seat audio system, gauge and meter, vanity lights, instrument panel lights, running board lights, multiplex communication system
18. **RADIO NO.1 20 A:** Audio system, navigation system
19. **ECU–B 10 A:** Anti–lock brake system, traction control system (two–wheel drive models), active traction control system (four–wheel drive models), vehicle stability control system, air conditioning system, multiplex communication system, theft deterrent system
20. **ALT–S 7.5 A:** Charging system
21. **HORN 10 A:** Horns
22. **A/F HEATER 15 A:** A/F sensor
23. **TRN–HAZ 15 A:** Turn signal lights, emergency flashers
24. **ETCS 10 A:** Multiport fuel injection system/sequential multiport fuel injection system
25. **EFI 20 A:** Multiport fuel injection system/sequential multiport fuel injection system
26. **DR/LCK 20 A:** Power door lock system
27. **TOWING 30 A:** Towing converter
28. **RADIO NO.2 20 A:** Audio system
29. **IGN 10 A:** Multiport fuel injection system/sequential multiport fuel injection system, anti–lock brake system, traction control system (two–wheel drive models), active traction control system (four–wheel drive models), vehicle stability control system, stop light, meter and gauge, front passenger occupant classification system
30. **SRS 10 A:** SRS airbag system
31. **GAUGE 7.5 A:** Meter and gauge
32. **STA NO.2 7.5 A:** Multiport fuel injection system/sequential multiport fuel injection system

33. **FR WIP–WSH 30 A:** Windshield wipers and washer
34. **4WD 20 A:** Four–wheel drive control system
35. **D P/SEAT 30 A:** Driver’s power seat
36. **P P/SEAT 30 A:** Front passenger’s power seat
37. **PWR OUTLET 15 A:** Power outlets
38. **RR WSH 15 A:** Back window washer, multiplex communication system
39. **ECU–IG 10 A:** Shift lock control system, power windows, anti–lock brake system, traction control system (two–wheel drive models), active traction control system (four–wheel drive models), vehicle stability control system, electric moon roof, multiplex communication system, theft deterrent system, rear height control air suspension, tire pressure warning system
40. **IG1 15 A:** Anti–lock brake system, traction control system (two–wheel drive models), active traction control system (four–wheel drive models), vehicle stability control system, air conditioning system, charging system, back window defogger, back–up lights, turn signal lights, emergency flashers, seat heaters, AC inverter, instrument panel light control, auto anti–glare inside rear view mirror
41. **STA 7.5 A:** No circuit
42. **SECU/HORN 10 A:** Theft deterrent system
43. **TAIL 10 A:** Tail lights, license plate lights, parking lights, instrument panel light control, multiport fuel injection system/sequential multiport fuel injection system, instrument panel lights, meter and gauge, grove box light
44. **ACC 7.5 A:** Power outlets, outside rear view mirrors, audio system, navigation system, rear seat audio system, shift lock control system, instrument panel lights
45. **CIG 10 A:** No circuit

Fuses (type B)

46. **A/PUMP 50 A:** Multiport fuel injection system/sequential multiport fuel injection system
47. **AIRSUS 50 A:** Rear height control air suspension
48. **AM1 50 A:** All components in “ACC”, “CIG”, “IG1”, “ECU–IG”, “FR WIP–WSH”, “RR WIP”, “RR–WSH”, “4WD”, and “STA” fuses
49. **TOWING BRK 30 A:** Trailer brake controller
50. **J/B 50 A:** All components in “PWR OUTLET”, “D P/SEAT”, “P P/SEAT”, “POWER”, “TAIL” and “SECU/HORN” fuses
51. **BATT CHG 30 A:** Trailer sub battery
52. **TOWING 40 A:** Trailer lights (tail lights)
53. **ABS MTR 40 A:** Anti–lock brake system, traction control system (two–wheel drive models), active traction control system (four–wheel drive models), vehicle stability control system
54. **AM2 30 A:** Starter system, “IGN”, “GAUGE”, “STA NO.2” and “SRS” fuses

55. **ABS SOL 30 A:** Anti–lock brake system, traction control system (two–wheel drive models), active traction control system (four–wheel drive models), vehicle stability control system
56. **POWER 30 A:** Power windows, electric moon roof

Fuses (type C)

57. **ALT 140 A:** All components in “AM2”, “ALT–S”, “DR/LCK”, “TRN–HAZ”, “HORN”, “RADIO NO.2”, “EFI”, “TOWING”, “ABS MTR”, “ABS SOL”, “HEATER” and “ETCS” fuses
58. **HEATER 60 A:** Air conditioning system

SECTION 9

REPORTING SAFETY DEFECTS FOR U.S. OWNERS

Reporting safety defects for U.S. owners 412

Reporting safety defects for U.S. owners

If you believe that your vehicle has a defect which could cause a crash or could cause injury or death, you should immediately inform the National Highway Traffic Safety Administration (NHTSA) in addition to notifying Toyota Motor Sales, U.S.A., Inc.
(Toll–free: 1–800–331–4331).

If NHTSA receives similar complaints, it may open an investigation, and if it finds that a safety defect exists in a group of vehicles, it may order a recall and remedy campaign. However, NHTSA cannot become involved in individual problems between you, your dealer, or Toyota Motor Sales, U.S.A., Inc.

To contact NHTSA, you may either call the Auto Safety Hotline toll–free at 1–800–424–9393 (or 366–0123 in Washington, D.C. area) or write to: NHTSA, U.S. Department of Transportation, Washington, D.C. 20590. You can also obtain other information about motor vehicle safety from the Hotline.

¿U –4

Quick index

- If a service reminder indicator or warning buzzer comes on 145
- If your vehicle will not start 330
- If your engine stalls while driving 333
- If your vehicle overheats 334
- If you have a flat tire 335
- If your vehicle needs to be towed 345
- Tips for driving during break–in period 283
- How to start the engine 310
- General maintenance 363
- Complete index ..... NO TAG

Gas station information

Fuel type:

UNLEADED gasoline, Octane Rating 87 (Research Octane Number 91) or higher.
For improved vehicle performance, the use of premium unleaded gasoline with an Octane Rating of 91 (Research Octane Number 96) or higher is recommended.

See page 283 for detailed information.

Fuel tank capacity:
87 L (23.0 gal., 19.1 Imp. gal.)

Engine oil:
API grade SL “Energy–Conserving” or ILSAC multigrade engine oil is recommended.

See page 377 for detailed information.

Tire information: See pages 381 through 388.

Tire inflation pressure: See page 406.

Publication No. OM35860U
Part No. 01999-35860
Printed in Japan 01–0504–00 I
4¿¿¿¿ (¿¿U)

WE REALLY CARE ABOUT YOU — PLEASE BUCKLE UP

Toyota has made a special effort to encourage use of seat belts.

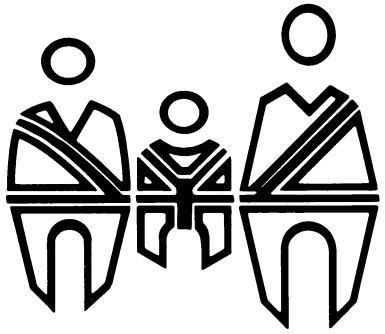

Toyota belts are:

- **Comfortable**
- **Easy to use**
- **Convenient**

We encourage you to use your belts every time you drive.

You should know as much about the quality and importance of proper maintenance of your new vehicle as the people who built it.

The Toyota authorized Repair Manual tells you how to maintain your vehicle and enables you to correctly perform your own maintenance.

The best way to keep your new vehicle in top running order is to maintain it properly from the moment you drive it off the showroom floor.

The Toyota authorized Repair Manual is packed with literally everything you need to know to perform your own maintenance in virtually every area of your new vehicle.

Maintenance procedures for the engine, chassis, body, electrical system, and more, are clearly explained and illustrated.

Periodic maintenance and tune–up

Periodic maintenance and tune–up helps to prevent small problems from growing into larger ones later on. The repair manual outlines exactly what maintenance is required and clearly explains how to do the work yourself step–by–step.

Areas covered include such things as spark plug replacement, valve clearance adjustment and engine oil and filter replacement.

Where to obtain the Repair Manual

The repair manual for 4RUNNER may be purchased from any Toyota dealer or the Material Distribution Center. To purchase the repair manual, please contact your Toyota dealer or call the Material Distribution Center toll–free at 1–800–622–2033.