Kia, THE COMPANY

Thank you for becoming the owner of a new Kia vehicle.

As a global car manufacturer focused on building high-quality vehicles with exceptional value, Kia Motors is dedicated to providing you with a customer service experience that exceeds your expectations.

All information contained in this Owner's Manual was accurate at the time of publication. However, Kia reserves the right to make changes at any time so that our policy of continual product improvement can be carried out.

This manual applies to all trims of this vehicle and includes images, descriptions, and explanations of optional as well as standard equipment. As a result, some material in this manual may not be applicable to your specific Kia vehicle. Some images are shown for illustration only and may show features that differ from those on your vehicle.

Drive safely and enjoy your Kia!

Thank you for choosing a Kia vehicle.

When you require service, remember that your Kia dealer knows your vehicle best. Your dealer has factory-trained technicians, recommended special tools and genuine Kia replacement parts. It is dedicated to your complete customer satisfaction.

Because subsequent owners require this important information as well, this publication should remain with the vehicle if it is sold.

This manual will familiarize you with operational, maintenance and safety information about your new vehicle. It is supplemented by a Warranty and Consumer Information manual that provides important information on all warranties regarding your vehicle.

We urge you to read these publications carefully and follow the recommendations to help assure enjoyable and safe operation of your new vehicle.

Kia offers a great variety of options, components and features for its various models. Therefore, some of the equipment described in this manual, along with the various illustrations, may not be applicable to your particular vehicle.

The information and specifications provided in this manual were accurate at the time of printing. Kia reserves the right to discontinue or change specifications or design at any time without notice and without incurring any obligation. If you have questions, always check with your Kia dealer.

We assure you of our continuing interest in your motoring pleasure and satisfaction in your Kia vehicle.

© 2020 Kia Canada Inc.

All rights reserved. Reproduction by any means, electronic or mechanical, including photocopying, recording, or by any information storage and retrieval system or translation in whole or part is not permitted without written authorization from Kia Canada Inc..

Printed in Korea

TABLE OF CONTENTS

Introduction	1
Your vehicle at a glance	2
Safety features of your vehicle	3
Features of your vehicle	4
Driving your vehicle	5
What to do in an emergency	6
Maintenance	7
Specifications, Consumer information and Reporting safety defects	8
Index	I

Introduction

1

How to use this manual 1-2
Fuel requirements 1-2
• Gasoline containing alcohol and methanol. 1-3
• Do not use methanol 1-4
• Fuel Additives 1-5
• Operation in foreign countries. 1-5
Vehicle handling instructions 1-6
Vehicle modifications 1-6
Vehicle break-in process 1-6
Vehicle data collection and event data recorders . 1-7

HOW TO USE THIS MANUAL

We want to help you get the greatest possible driving pleasure from your vehicle. Your Owner's Manual can assist you in many ways. We strongly recommend that you read the entire manual. In order to minimize the chance of death or injury, you must read the WARNING and CAUTION sections in the manual.

Illustrations complement the words in this manual to best explain how to enjoy your vehicle. By reading your manual, you will learn about features, important safety information, and driving tips under various road conditions.

The general layout of the manual is provided in the Table of Contents. Use the index when looking for a specific area or subject; it has an alphabetical listing of all information in your manual.

Sections: This manual has 9 sections plus an index. Each section begins with a brief list of contents so you can tell at a glance if that section has the information you want.

You will find various WARNINGs, CAUTIONs, and NOTICEs in this manual. These WARNINGs were prepared to enhance your personal safety. You should carefully read and follow ALL procedures and recommendations provided in these WARNINGs, CAUTIONs and NOTICEs.

⚠ WARNING

A WARNING indicates a situation in which harm, serious bodily injury or death could result if the warning is ignored.

⚠ CAUTION

A CAUTION indicates a situation in which damage to your vehicle could result if the caution is ignored.

✻ NOTICE

A NOTICE indicates interesting or helpful information is being provided.

FUEL REQUIREMENTS

Your new vehicle is designed to use only unleaded fuel having a pump octane number ((R+M)/2) of 87 (Research Octane Number 91) or higher. (Do not use methanol blended fuels.)

Your new vehicle is designed to obtain maximum performance with UNLEADED FUEL, as well as minimize exhaust emissions and spark plug fouling.

Never add any fuel system cleaning agents to the fuel tank other than what has been specified. (Consult an authorized Kia dealer for details.)

- Tighten the cap until it clicks one time, otherwise the Check Engine light will illuminate.

⚠ WARNING - Refueling

- **Do not "top off" after the nozzle automatically shuts off. Attempts to force more fuel into the tank can cause fuel overflow onto you and the ground causing a risk of fire.**
- **Always check that the fuel cap is installed securely to prevent fuel spillage, especially in the event of an accident.**

Gasoline containing alcohol and methanol

Gasohol, a mixture of gasoline and ethanol (also known as grain alcohol), and gasoline or gasohol containing methanol (also known as wood alcohol) are being marketed along with or instead of leaded or unleaded gasoline.

Pursuant to EPA regulations, ethanol may be used in your vehicle.

Do not use gasohol containing more than 15% ethanol, and do not use gasoline or gasohol containing any methanol. Ethanol provides less energy than gasoline and it attracts water, and it is thus likely to reduce your fuel efficiency and could lower your MPG results.

Methanol may cause drivability problems and damage to the fuel system, engine control system and emission control system.

Discontinue using gasohol of any kind if drivability problems occur.

Vehicle damage or drivability problems may not be covered by the manufacturer's warranty if they result from the use of:

1. Gasoline or gasohol containing methanol.
2. Leaded fuel or leaded gasohol.
3. Gasohol containing more than 15% ethanol.

"E85" fuel is an alternative fuel comprised of 85 percent ethanol and 15 percent gasoline, and is manufactured exclusively for use in Flexible Fuel Vehicles. "E85" is not compatible with your vehicle. Use of "E85" may result in poor engine performance and damage to your vehicle's engine and fuel system. Kia recommends that customers do not use fuel with an ethanol content exceeding 15%.

✻ NOTICE

Your New Vehicle Limited Warranty does not cover damage to the fuel system or any performance problems caused by the use of "E85" fuel.

✻ NOTICE

Never use any fuel containing methanol. Discontinue use of any methanol containing product which may inhibit proper drivability.

Other fuels

Using fuels that contain Silicone (Si), MMT (Manganese, Mn), Ferrocene (Fe), and Other metalic additives, may cause vehicle and engine damage or cause misfiring, poor acceleration, engine stalling, catalyst melting, clogging, abnormal corrosion, life cycle reduction, etc.

Also, the Malfunction Indicator Lamp (MIL) may illuminate.

✻ NOTICE

Damage to the fuel system or performance problem caused by the use of these fuels may not be covered by your New Vehicle Limited Warranty.

Use of MTBE

Kia recommends avoiding fuels containing MTBE (Methyl Tertiary Butyl Ether) over 15.0% vol. (Oxygen Content 2.7% weight) in your vehicle.

Fuel containing MTBE over 15.0% vol. (Oxygen Content 2.7% weight) may reduce vehicle performance and produce vapor lock or hard starting.

✻ NOTICE

Your New Vehicle Limited Warranty may not cover damage to the fuel system and any performance problems that are caused by the use of fuels containing methanol or fuels containing MTBE (Methyl Tertiary Butyl Ether) over 15.0% vol. (Oxygen Content 2.7% weight.)

Gasoline containing MMT

Some gasoline contains harmful manganese-based fuel additives Such as MMT(Methylcyclopentadienyl Manganese Tricarbonyl). Kia does not recommend the use of gasoline containing MMT. This type of fuel can reduce vehicle performance and affect your emission control system. The Malfunction Indicator Lamp on the cluster may come on.

Do not use methanol

Fuels containing methanol (wood alcohol) should not be used in your vehicle. This type of fuel can reduce vehicle performance and damage components of the fuel system, engine control system and emission control system.

Fuel Additives

Kia recommends that you use good quality gasolines treated with detergent additives such as TOP TIER Detergent Gasoline, which help prevent deposit formation in the engine. These gasolines will help the engine run cleaner and enhance performance of the Emission Control System. For more information on TOP TIER Detergent Gasoline, please go to the website www.toptiergas.com

For customers who do not use TOP TIER Detergent Gasoline regularly, and have problems starting or the engine does not run smoothly, additives that you can buy separately may be added to the gasoline.

If TOP TIER Detergent Gasoline is not available, one bottle of additive should be added to the fuel tank at every 12,000 km (7,500 miles) or every engine oil change is recommended. Additives are available from your authorized Kia dealer along with information on how to use them. Do not mix other additives.

Operation in foreign countries

If you are going to drive your vehicle in another country, be sure to:

- Observe all regulations regarding registration and insurance.
- Determine that acceptable fuel is available.

VEHICLE HANDLING INSTRUCTIONS

As with other vehicles of this type, failure to operate this vehicle correctly may result in loss of control, an accident or vehicle rollover.

Specific design characteristics (higher ground clearance, track, etc.) give this vehicle a higher center of gravity than other types of vehicles. In other words they are not designed for cornering at the same speeds as conventional 2-wheel drive vehicles. Avoid sharp turns or abrupt maneuvers. Again, failure to operate this vehicle correctly may result in loss of control, an accident or vehicle rollover. **Be sure to read the "Reducing the risk of a rollover" driving guidelines, in chapter 6 of this manual.**

VEHICLE MODIFICATIONS

This vehicle should not be modified. Modification of your vehicle could affect its performance, safety or durability and may even violate governmental safety and emissions regulations.

In addition, damage or performance problems resulting from any modification may not be covered under warranty.

- If you use unauthorized electronic devices, it may cause the vehicle to operate abnormally, wire damage, battery discharge and fire. For your safety, do not use unauthorized electronic devices.

VEHICLE BREAK-IN PROCESS

No special break-in period is needed. By following a few simple precautions for the first 1,000 km (600 miles) you may add to the performance, economy and life of your vehicle.

- Do not race the engine.
- While driving, keep your engine speed (rpm, or revolutions per minute) between 2,000 rpm and 4,000 rpm.
- Do not maintain a single speed for long periods of time, either fast or slow. Varying engine speed is needed to properly break-in the engine.
- Avoid hard stops, except in emergencies, to allow the brakes to seat properly.
- Don't tow a trailer during the first 2,000 km (1,200 miles) of operation.

VEHICLE DATA COLLECTION AND EVENT DATA RECORDERS

This vehicle is equipped with an event data recorder (EDR). The main purpose of an EDR is to record, in certain crash or near crash-like situations, such as an air bag deployment or hitting a road obstacle, data that will assist in understanding how a vehicle's systems performed. The EDR is designed to record data related to vehicle dynamics and safety systems for a short period of time, typically 30 seconds or less. The EDR in this vehicle is designed to record such data as:

- **How various systems in your vehicle were operating;**
- **Whether or not the driver and passenger safety belts were buckled/fastened;**
- **How far (if at all) the driver was depressing the accelerator and/or brake pedal; and,**
- **How fast the vehicle was traveling.**

These data can help provide a better understanding of the circumstances in which crashes and injuries occur. NOTE: EDR data are recorded by your vehicle only if a non-trivial crash situation occurs; no data are recorded by the EDR under normal driving conditions and no personal data (e.g., name, gender, age, and crash location) are recorded. However, other parties, such as law enforcement, could combine the EDR data with the type of personally identifying data routinely acquired during a crash investigation.

To read data recorded by an EDR, special equipment is required, and access to the vehicle or the EDR is needed. In addition to the vehicle manufacturer, other parties, such as law enforcement, that have the special equipment, can read the information if they have access to the vehicle or the EDR.

Your vehicle at a glance

Exterior overview 2-2
Interior overview 2-4
Instrument panel overview 2-5
Engine compartment 2-6

EXTERIOR OVERVIEW

■ Front view

1. Hood.....4-46
2. Head lamp (Features of your vehicle) ...4-127
   Head lamp (Maintenance).....7-81
3. Front fog lamp
   (Features of your vehicle).....4-133
   Front fog lamp (Maintenance) 7-81
4. Tires and wheels.....7-46, 8-5
5. Outside rearview mirror.....4-76
6. Panorama sunroof.....4-52
7. Front windshield wiper blades
   (Features of your vehicle).....4-135
   Front windshield wiper blades
   (Maintenance) 7-41
8. Windows.....4-41
9. Front ultrasonic sensor.....4-122

❊ The actual shape may differ from the illustration.

OQL018001L

■ Rear view

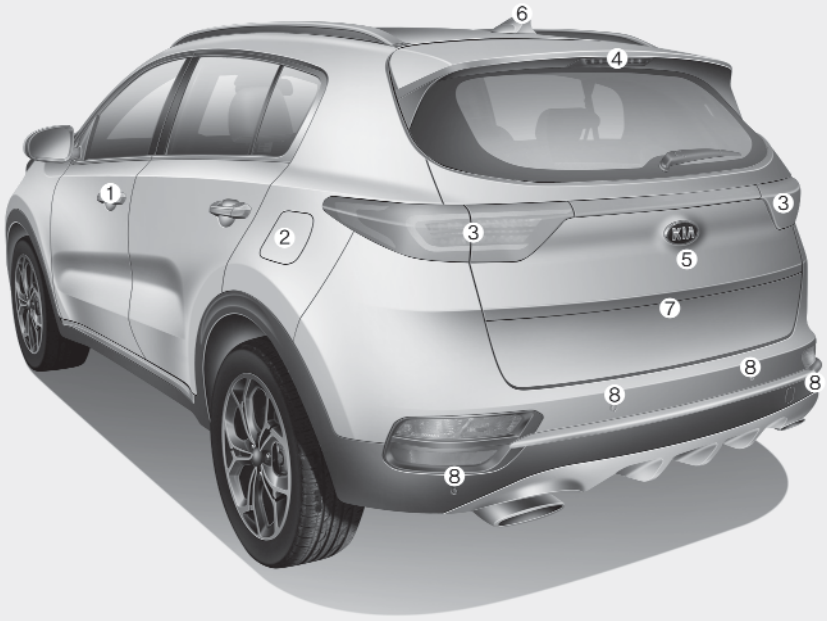

1. Door locks 4-23
2. Fuel filler lid 4-48
3. Rear combination lamp (Maintenance) ..7-82
4. High mounted stop lamp (Maintenance)...7-82
5. Liftgate 4-28, 4-31
6. Antenna 4-190
7. Rearview moniter 4-117
8. Rear ultrasonic sensor.....4-118

❈ The actual shape may differ from the illustration.

OQL018002L

INTERIOR OVERVIEW

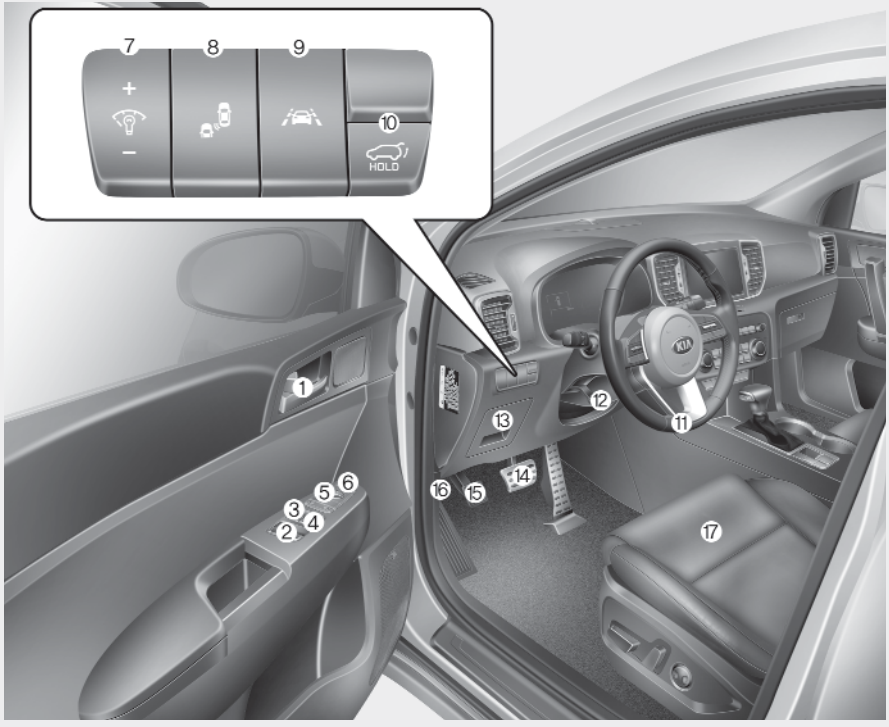

1. Inside door handle 4-24
2. Power window switch.....4-42
3. Central door lock switch 4-25
4. Power window lock button 4-44
5. Outside rearview mirror control 4-77
6. Outside rearview mirror folding 4-78
7. Instrument panel illumination control 4-81
8. Blind-Spot Safety button.....5-100
9. Lane Safety button.....5-92
10. Power liftgate open/close button 4-31
11. Steering wheel.....4-58
12. Tilt and telescopic steering control lever.....4-59
13. Inner fuse panel.....7-63
14. Brake pedal.....5-33
15. Parking brake pedal.....5-35
16. Hood release lever.....4-46
17. Seat.....3-4

❊ The actual shape may differ from the illustration.

OQL010008N

INSTRUMENT PANEL OVERVIEW

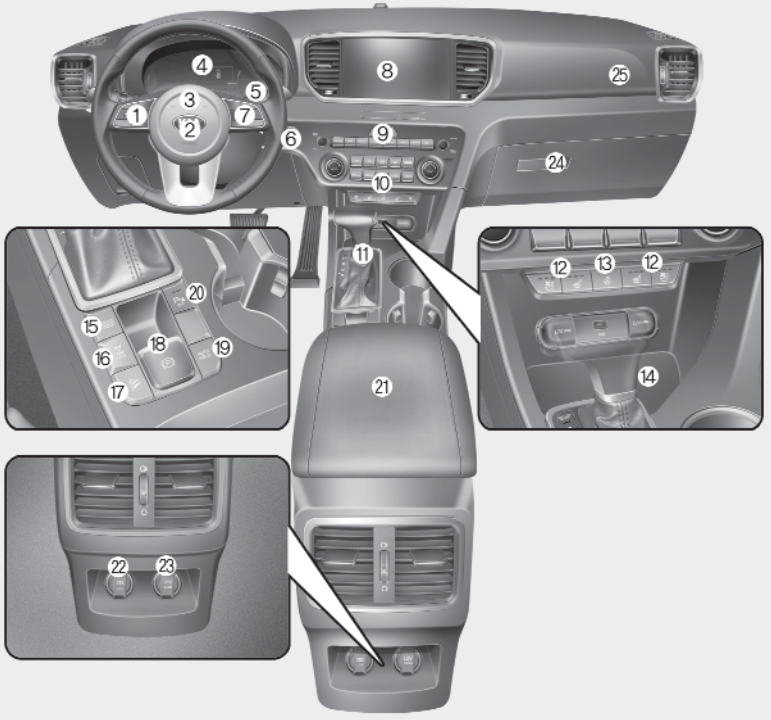

1. Steering wheel audio controls 4-188
2. Driver`s front air bag 3-60
3. Horn.....4-61
4. Instrument cluster.....4-80
5. Wiper and washer control lever.....4-135
6. Ignition switch.....5-7
   ENGINE START/STOP button.....5-11
7. Cruise control 5-84
8. Audio 4-188
9. Hazard warning flasher 6-2
10. Manual climate control system.....4-144
    Automatic climate control system....4-154
11. Shift lever A/T 5-15
12. Seat warmer.....4-175
    Air ventilation seat 4-176
13. Heated steering wheel button 4-60
14. Smart phone wireless charger 4-179
15. Drive mode button 5-57
16. AWD Lock button.....5-23
17. DBC button.....5-51
18. Electronic parking brake (EPB) switch..5-34
19. Auto Hold On/Off button.....5-41
20. Parking Safety button.....4-118
21. Center console storage box 4-171
22. USB charger.....4-178
23. Power outlet.....4-177
24. Glove box 4-171
25. Passenger's front air bag 3-60

❊ The actual shape may differ from the illustration.

OQL018004L

ENGINE COMPARTMENT

■ **Gasoline engine (Theta II 2.4L GDI)**

■ **Gasoline engine (Theta II 2.0L T-GDI)**

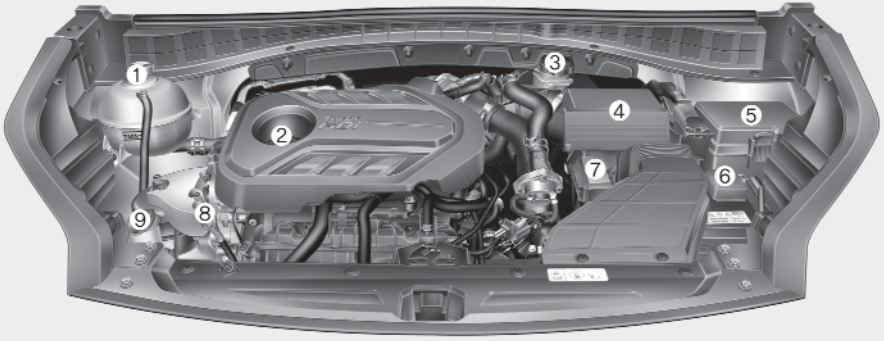

❊ The actual engine room in the vehicle may differ from the illustration.

1. Engine coolant reservoir 7-30
2. Engine oil filler cap 7-27
3. Brake fluid reservoir 7-33
4. Air cleaner.....7-36
5. Fuse box 7-65
6. Negative battery terminal.....7-43
7. Positive battery terminal 7-43
8. Engine oil dipstick 7-27
9. Windshield washer fluid reservoir 7-34

OQLE075095/OQLA075109

Safety features of your vehicle

Important safety precautions 3-2
- Always wear your seat belt 3-2
- Restrain all children 3-2
- Air bag hazards 3-2
- Driver distraction 3-2
- Control your speed 3-3
- Keep your vehicle in safe condition 3-3

Seat. 3-4
- Front seat adjustment - manual. 3-8
- Front seat adjustment - power. 3-10
- Headrest (for front seat) 3-12
- Seatback pocket. 3-15
- Rear seat adjustment 3-15

Seat belts 3-20
- Seat belt restraint system 3-20
- Pre-tensioner seat belt 3-28
- Seat belt precautions. 3-31
- Care of seat belts 3-33

Child restraint system (CRS) 3-34
- Children Always in the Rear 3-34
- Selecting a Child Restraint System (CRS) 3-35
- Installing a Child Restraint System (CRS). 3-38

Air bag - advanced supplemental restraint system 3-45
- How does the air bag system operate? 3-46
- Air bag warning light 3-48
- SRS components and functions 3-49
- Occupant Detection System (ODS) 3-52
- Driver's and passenger's front air bag 3-60
- Side air bag 3-62
- Curtain air bag 3-64
- SRS Care 3-71
- Adding equipment to or modifying your air bag-equipped vehicle. 3-72
- Air bag warning label 3-72

IMPORTANT SAFETY PRECAUTIONS

You will find many safety precautions and recommendations throughout this section, and throughout this manual. The safety precautions in this section are among the most important.

Always wear your seat belt

A seat belt is your best protection in all types of accidents. Air bags are designed to supplement seat belts, not replace them. So even though your vehicle is equipped with air bags, ALWAYS make sure you and your passengers wear your seat belts, and wear them properly.

Restrain all children

All children under age 13 should ride in your vehicle properly restrained in a rear seat, not the front seat. Infants and small children should be restrained in an appropriate child restraint. Larger children should use a booster seat with the lap/shoulder belt until they can use the seat belt properly without a booster seat.

Air bag hazards

While air bags can save lives, they can also cause serious or fatal injuries to occupants who sit too close to them, or who are not properly restrained. Infants, young children, and shorter adults are at the greatest risk of being injured by an inflating air bag. Follow all instructions and warnings in this manual.

Driver distraction

Driver distraction presents a serious and potentially deadly danger.

Safety should be the first concern when behind the wheel and drivers need to be aware of the wide array of potential distractions, such as drowsiness, reaching for objects, eating, personal grooming, other passengers, and using cellular phones.

Drivers can become distracted when they take their eyes and attention off the road or their hands off the wheel to focus on activities other than driving. To reduce your risk of distraction or getting into an accident:

- ALWAYS set up your mobile devices (i.e., MP3 players, phones, navigation units, etc.) when your vehicle is parked or safely stopped.

- ONLY use your mobile device when allowed by laws and when conditions permit safe use. NEVER text or email while driving. Most states have laws prohibiting drivers from texting. Some states and cities also prohibit drivers from using handheld phones.
- NEVER let the use of a mobile device distract you from driving. You have a responsibility to your passengers and others on the road to always drive safely, with your hands on the wheel as well as your eyes and attention on the road.

Control your speed

Excessive speed is a major factor in crash injuries and deaths. Generally, the higher the speed, the greater the risk, but serious injuries can also occur at lower speeds. Never drive faster than is safe for current conditions, regardless of the maximum speed posted.

Keep your vehicle in safe condition

Having a tire blowout or a mechanical failure can be extremely hazardous. To reduce the possibility of such problems, check your tire pressures and condition frequently, and perform all regularly scheduled maintenance.

SEAT

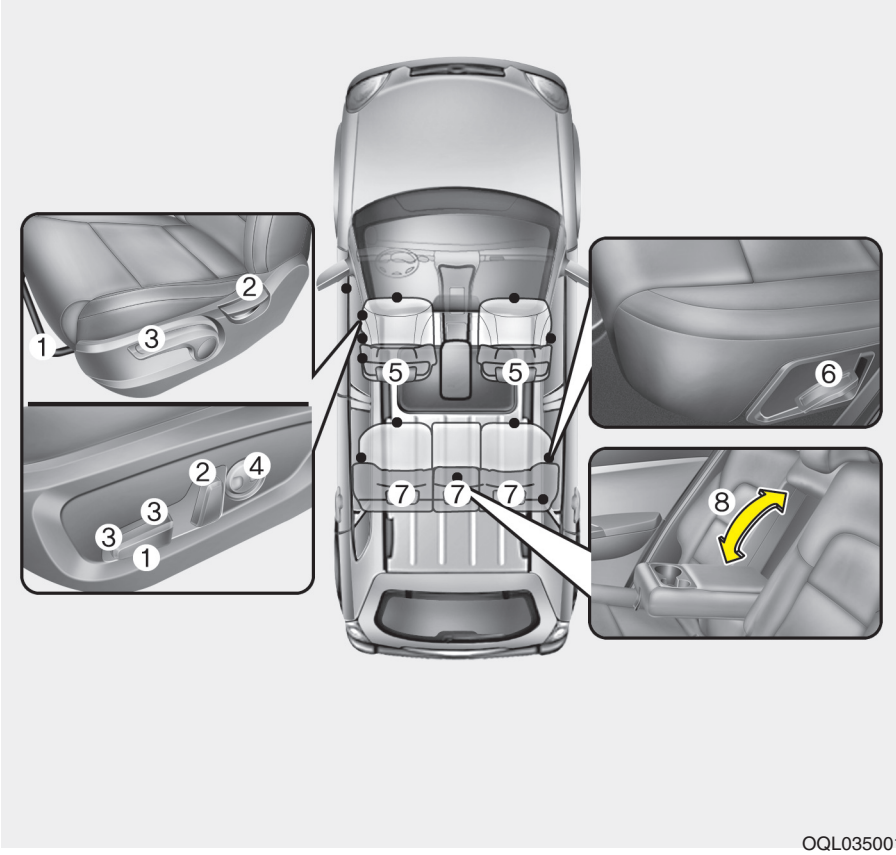

Front seat

(1) Seat adjustment, forward / backward
(2) Seatback recliner
(3) Seat adjustment, height*
(4) Lumbar support* (Driver`s seat)
(5) Headrest

Rear seat

(6) Seatback angle and folding
(7) Headrest
(8) Armrest

* : if equipped

⚠ WARNING - Loose objects

Do not place anything in the driver's foot well or under the front seats. Loose objects in the driver's foot area could interfere with the operation of the foot pedals.

⚠ WARNING - Uprighting seat

Do not press the release lever on a manual seatback without holding and controlling the seatback. The seatback will spring upright possibly impacting you or other passengers.

⚠ WARNING - Driver responsibility for passengers

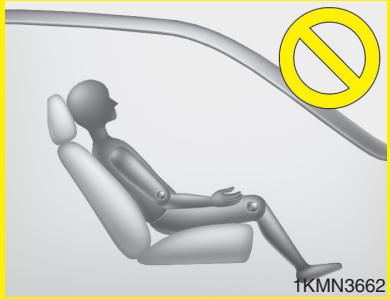

The driver must advise the passengers to keep the seatback in an upright position whenever the vehicle is in motion. If a seat is reclined during an accident, the restraint system's ability to restrain will be greatly reduced.

⚠ WARNING - Seat cushion

Occupants should never sit on aftermarket seat cushions or sitting cushions. The passenger's hips may slide under the lap portion of the seat belt during an accident or a sudden stop.

⚠ WARNING - Driver's seat

- Never attempt to adjust the seat while the vehicle is moving. This could result in loss of control of your vehicle.
- Do not allow anything to interfere with the normal position of the seatback. Storing items against the seatback could result in serious or fatal injury in a sudden stop or collision.
- Sit as far back as possible from the steering wheel while still maintaining comfortable control of the your vehicle. A distance of at least 25 cm (10 in.) from your chest to the steering wheel is recommended. Failure to do so can result in air bag inflation injuries to the driver.

⚠ WARNING - Rear seatbacks

Always lock the rear seatback before driving. Failure to do so could result in passengers or objects being thrown forward injuring vehicle occupants.

⚠ WARNING - Luggage and Cargo

Do not stack pile or stack luggage or cargo higher than the seatback in the cargo area. In an accident the cargo could strike and injury a passenger. If objects are large, heavy or must be piled, they must be secured in the cargo area.

⚠ WARNING - Cargo Area

Do not allow passengers to ride in the cargo area under any circumstance. The cargo area is solely for the purpose of transporting luggage or cargo.

⚠ WARNING - Unexpected Seat Movement

After adjusting a manual seat, always check that it is locked by shifting your weight to the front and back. Sudden or unexpected movement of the driver's seat could cause you to lose control of the vehicle.

⚠ WARNING - Seat adjustment

- **Do not adjust the seat while wearing seat belts. Moving the seat forward will cause strong pressure on the abdomen.**
- **Do not place your hand near the seat bottom or seat track while adjusting the seat. Your hand could get caught in the seat mechanism.**

⚠ WARNING - Small Objects

Use extreme caution when picking up small objects trapped under the seats or between the seat and the center console. Your hands might be cut or injured by the sharp edges of the seats mechanism.

Feature of Seat Leather

- Leather is made from the outer skin of an animal, which goes through a special process to be available for use. Since it is a natural substance, each part differs in thickness or density.

  Wrinkles may appear as a natural result of stretching and shrinking depending on the temperature and humidity.
- The seat is made of stretchable fabric to improve comfort.
- The parts contacting the body are curved and the side supporting area is high which provides driving comfort and stability.
- Wrinkles may appear naturally from usage. It is not a fault of the product.

⚠ CAUTION

- ***Belts with metallic accessories, zippers or keys inside the back pocket may damage the seat fabric.***
- ***Make sure not to wet the seat. It may change the nature of natural leather.***
- ***Jeans or clothes which could bleach may contaminate the surface of the seat covering fabric.***

✻ NOTICE

Wrinkles or abrasions which appear naturally from usage are not covered by warranty.

Front seat adjustment - manual

Forward and backward

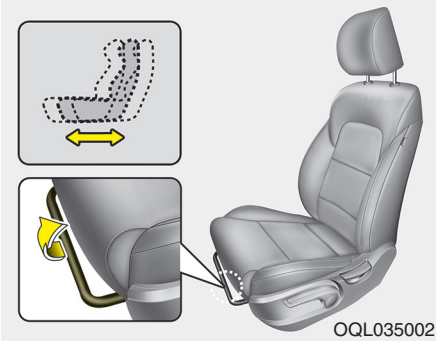

To move the seat forward or backward:

1. Pull the seat slide adjustment lever up and hold it.
2. Slide the seat to the position you desire.
3. Release the lever and make sure the seat is locked in place.

Adjust the seat before driving, and make sure the seat is locked securely by trying to move forward and backward without using the lever. If the seat moves, it is not locked properly.

Seatback angle

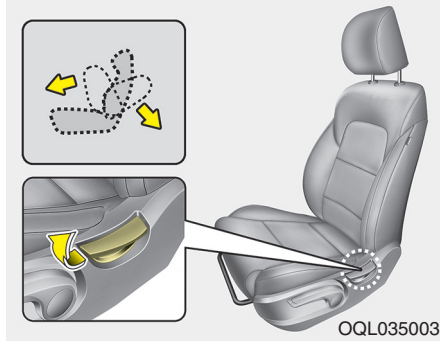

To recline the seatback:

1. Lean forward slightly and lift up the seatback recline lever.
2. Carefully lean back on the seatback and adjust the seatback of the seat to the position you desire.
3. Release the lever and make sure the seatback is locked in place. (The lever MUST return to its original position for the seatback to lock.)

Reclining seatback

Sitting in a reclined position when the vehicle is in motion can be dangerous. Even when buckled up, the protections of your restraint system (seat belts and/or air bags) is greatly reduced by reclining your seatback.

⚠ WARNING

NEVER ride with a reclined seatback when the vehicle is moving. Riding with a reclined seatback increases your chance of serious or fatal injuries in the event of a collision or sudden stop.

⚠ WARNING - Seating Position

To reduce the risk of injury in a crash, both drivers and passengers should always sit as far back as possible in the upright position with the seatbelt properly secured.

Seat belts must be snug against your hips and chest to work properly. When the seatback is reclined, the shoulder belt cannot do its job because it will not be snug against your chest. Instead, it will be in front of you. During an accident, you could be thrown into the seat belt, causing neck or other injuries.

The more the seatback is reclined, the greater chance the passenger's hips will slide under the lap belt or the passenger's neck will strike the shoulder belt.

Seat height

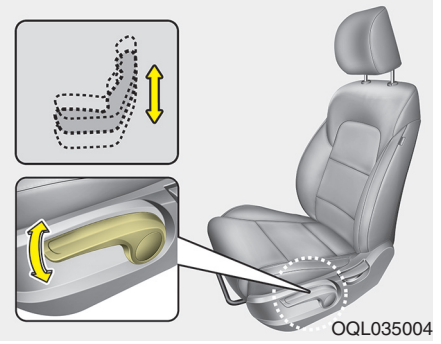

To change the height of the seat, push the lever upwards or downwards.

- To lower the seat cushion, push the lever down several times.
- To raise the seat cushion, pull the lever up several times.

Lumbar support (if equipped)

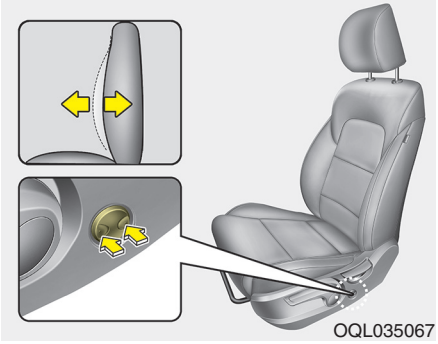

The lumbar support can be adjusted by pressing the lumbar support switch on the side of the seat.

1. Press the front portion of the switch to increase support, or the rear portion of the switch, to decrease support.
2. Release the switch once it reaches the desired position.

Front seat adjustment - power (if equipped)

The front seat can be adjusted by using the control switches located on the outside of the seat cushion. Before driving, adjust the seat to the proper position so you can easily control the steering wheel, pedals and switches on the instrument panel.

⚠ WARNING - Unattended children

Do not leave children unattended in the vehicle. Children might operate features of the vehicle that could injure them.

⚠ CAUTION - Power seat adjustments

The power seating controls function by electronic motor.

Excessive operation may cause damage to the electrical equipment.

⚠ CAUTION - Power Seating

Do not operate two or more power seat control switches at the same time. Doing so may damage the power seat motor or electrical components.

When in operation, the power seat-consumes a large amount of electrical power. To prevent unnecessary system drain, don't adjust the power seat longer than necessary while the engine is not running.

Forward and backward

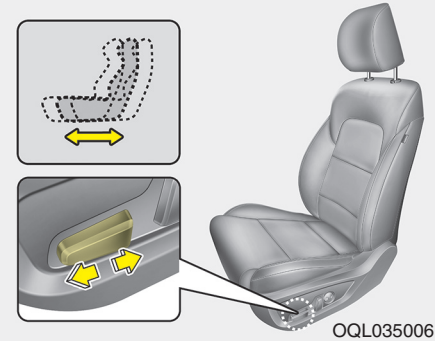

Push the control switch forward or backward to move the seat to the desired position. Release the switch once the seat reaches the desired position.

Seatback angle

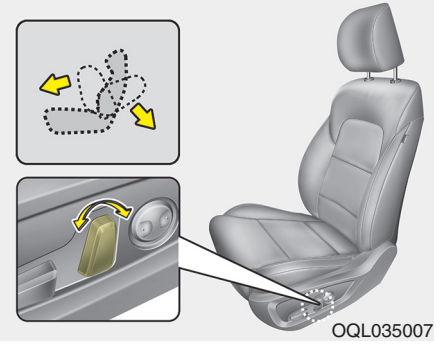

Push the control switch forward or backward to move the seatback to the desired angle. Release the switch once the seat reaches the desired position.

Seat height

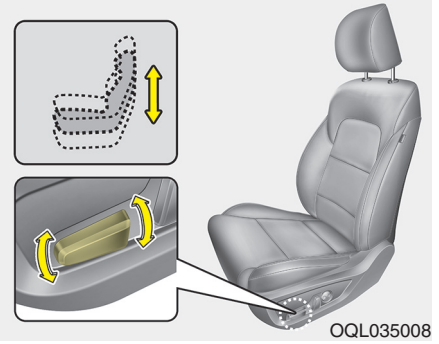

Pull the front portion of the control switch up to raise or press down to lower the front part of the seat cushion. Pull the rear portion of the control switch up to raise or press down to lower the seat cushion. Release the switch once the seat reaches the desired position.

Lumbar support (for driver's seat, if equipped)

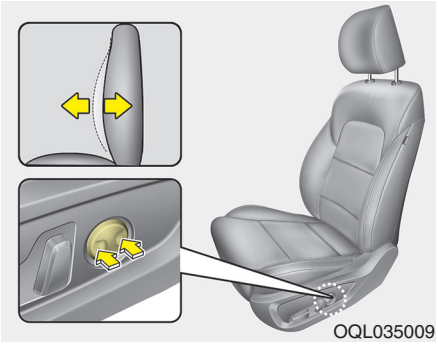

The lumbar support can be adjusted by pressing the lumbar support switch on the side of the seat.

1. Press the front portion of the switch to increase support, or the rear portion of the switch, to decrease support.
2. Release the switch once it reaches the desired position.

Headrest (for front seat)

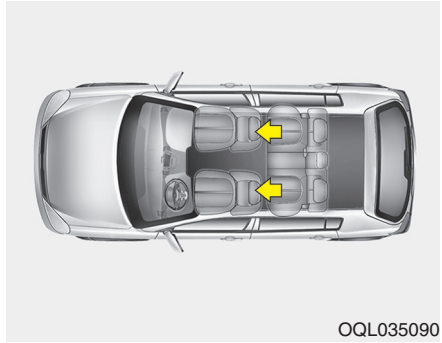

The driver's and front passenger's seats are equipped with a headrest for the occupant's safety and comfort.

The headrest not only provides comfort for the driver and front passenger, but also helps protect the head and neck in the event of a rear collision.

For maximum effectiveness in case of an accident, the headrest should be adjusted so the middle of the headrest is at the same height of the center of gravity of an occupant's head. Generally, the center of gravity of most people's head is similar with the height of the top of their eyes.

Also, adjust the headrest as close to your head as possible. For this reason, the use of a cushion that holds the body away from the seatback is not recommended.

⚠ WARNING - Headrest removal/adjustment

- **Do not operate the vehicle with the headrests removed. Headrests can provide critical neck and head support in a crash.**
- **Do not adjust the headrest height while the vehicle is in motion. Driver may lose control of the vehicle.**

Adjusting the height up and down

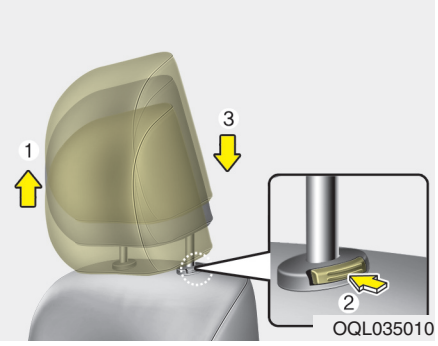

To raise the headrest, pull it up to the desired position (1). To lower the headrest, push and hold the release button (2) on the headrest support and lower the headrest to the desired position (3).

⚠ CAUTION

Excessive pulling or pushing may damage the headrest.

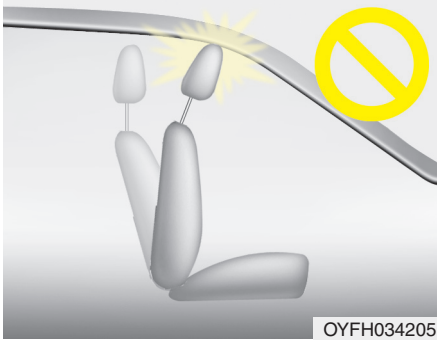

✻ NOTICE

If you recline the seatback towards the front with the headrest and seat cushion raised, the headrest may come in contact with the sunvisor or other parts of the vehicle.

Removal and reinstallation

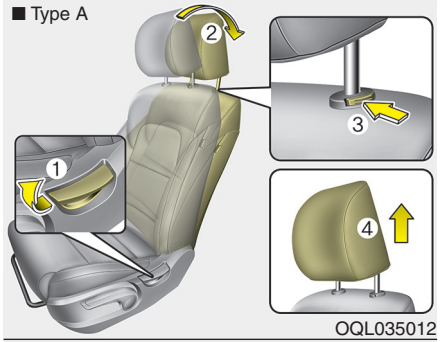

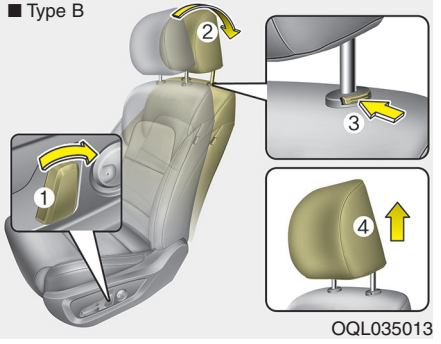

To remove the headrest:

1. Recline the seatback (2) with the recline lever or switch (1).
2. Raise headrest as far as it can go.
3. Press the headrest release button (3) while pulling the headrest up (4).

⚠ WARNING - Headrest Removal

NEVER allow anyone to ride in a seat with the headrest removed. Headrests can provide critical neck and head support in a crash.

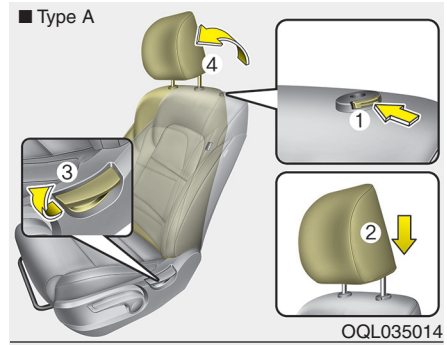

OQL035014

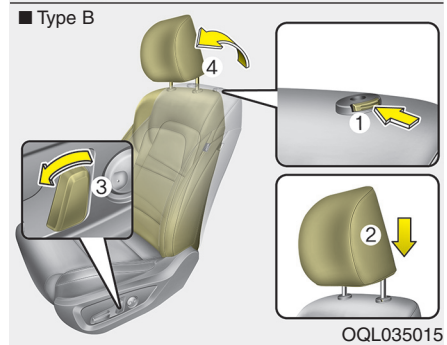

OQL035015

To reinstall the headrest :

1. Put the headrest poles (2) into the holes while pressing the release button (1) or switch(1).
2. Recline the seatback (4) with the recline lever or switch (3).
3. Adjust the headrest to the appropriate height.

⚠ WARNING - Headrest Reinstallation

To reduce the risk of injury to the head or neck, always make sure the headrest is locked into position and adjusted properly after reinstalling.

Seatback pocket

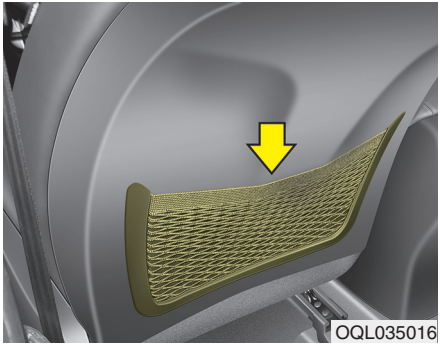

The seatback pocket is provided on the back of the front passenger's and driver's seatbacks.

⚠ WARNING - Seatback pockets

Do not put heavy or sharp objects in the seatback pockets. In an accident they could come loose from the pocket and injure vehicle occupants.

Rear seat adjustment

Headrest

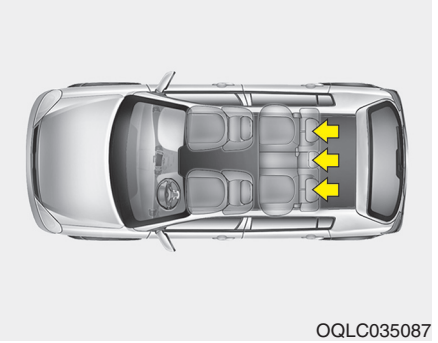

The rear seat is equipped with headrests in all the seating positions for the occupant's safety and comfort.

The headrest not only provides comfort for passengers, but also helps protect the head and neck in the event of a collision.

For maximum effectiveness in case of an accident, the headrest should be adjusted so the middle of the headrest is at the same height of the center of gravity of an occupant's head. Generally, the center of gravity of most people's heads is similar with the height as the top of their eyes.

Also, adjust the headrest as close to your head as possible. For this reason, the use of a cushion that holds the body away from the seatback is not recommended.

⚠ WARNING - Headrest Removal

NEVER allow anyone to ride in a seat with the headrest removed. Headrests can provide critical neck and head support in a crash.

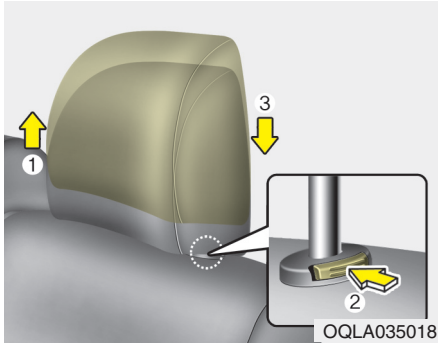

Adjusting the height up and down

To raise the headrest, pull it up to the desired position (1). To lower the headrest, push and hold the release button (2) on the headrest support and lower the headrest to the desired position (3).

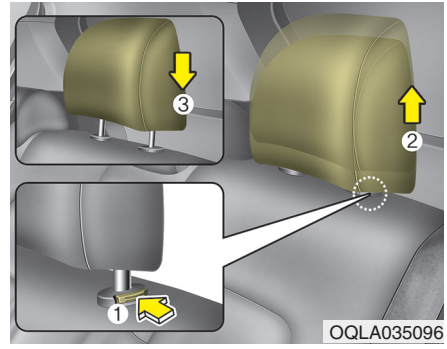

Removal and reinstallation

To remove the headrest, raise it as far as it can go then press the release button (1) while pulling the headrest upward (2).

To reinstall the headrest, put the headrest poles (3) into the holes while pressing the release button (1). Then adjust it to the appropriate height and ensure that it locks in position.

⚠ WARNING - Headrest Reinstallation

To reduce the risk of injury to the head or neck, always make sure the headrest is locked into position and adjusted properly after reinstalling.

Armrest

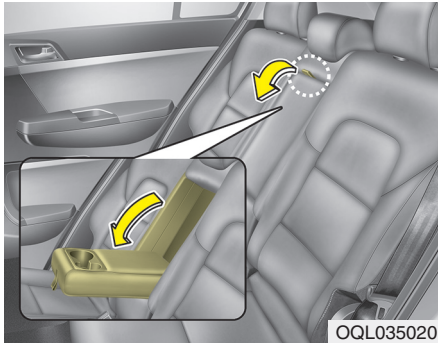

To use the armrest, pull it forward from the seatback.

Folding the rear seat

The rear seatbacks may be folded to facilitate carrying long items or to increase the luggage capacity of the vehicle.

⚠ WARNING

Never allow passengers to sit on top of the folded down seatback while the vehicle is moving. This is not a proper seating position and no seat belts are available for use. Ignoring this warning could result in serious injury or death in case of an accident or sudden stop.

⚠ WARNING - Objects

Objects carried on the folded down seatback should not extend higher than the top of the front seatbacks. This could allow cargo to slide forward and cause injury or damage during sudden stops.

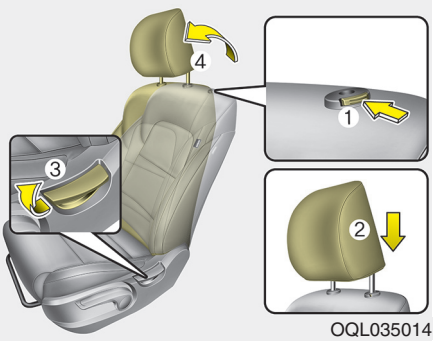

To fold down the rear seatback:

1. Set the front seatback to the upright position and if necessary, slide the front seat forward.
2. Lower the rear head restraints to the lowest position.

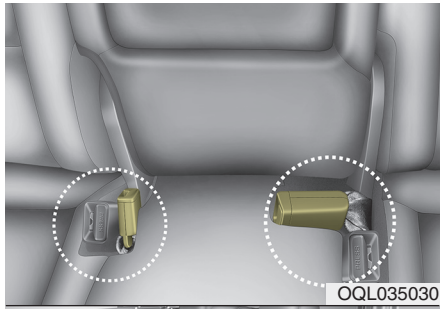

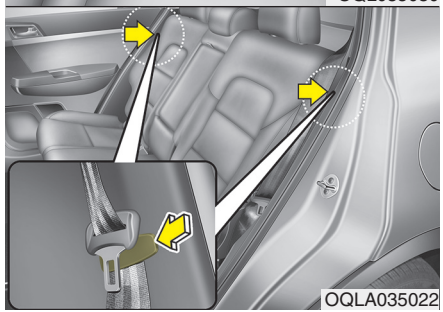

3. Insert the rear seat belt buckle in the pocket between the rear seatback and cushion, and insert the rear seat belt webbing in the guide to prevent the seat belt from being damaged.

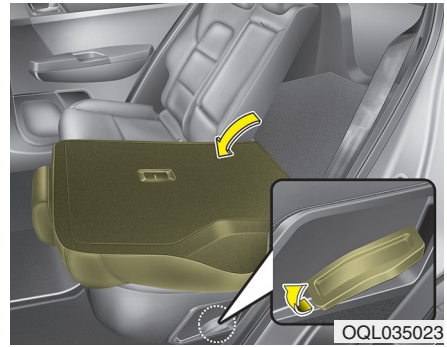

4. Lift up the front portion of the seatback folding lever, then fold the seat toward the front of the vehicle. When you return the seatback to its upright position, always be sure it has locked into position by pushing on the top of the seatback.

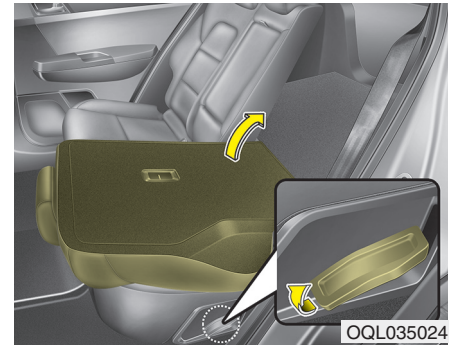

5. To use the rear seat, lift and push the seatback rearward by lifting up the front portion of the folding lever. Push the seatback firmly until it clicks into place. Make sure the seatback is locked in place.

⚠ WARNING - Rear Seatback

When returning the rear seat to the upright position:

- **Be careful not to damage the seat belt webbing or buckle.**
- **Ensure the seatback is completely locked into its upright position by pushing on the top of the seatback.**

Failure to adhere to any of these instructions could result in serious injury or death in the event of a crash.

⚠ WARNING

Unless the driver's position is properly set according to the driver's physical figure, do not fold the rear seat. It may increase bodily injuries in a sudden stop or collision.

⚠ WARNING - Objects

Objects carried on the folded down seatback should not extend higher than the top of the front seatbacks. This could allow cargo to slide forward and cause injury or damage during sudden stops.

⚠ CAUTION - Damaging rear seat belt buckles

When you fold the rear seatback, insert the buckle between the rear seatback and cushion. Doing so can prevent the buckle from being damaged by the rear seatback.

When returning the rear seatbacks to the upright position, remember to return the rear shoulder belts to their proper position.

⚠ WARNING - Cargo

Do not place objects in the rear seats, since they cannot be properly secured and may hit vehicle occupants in a collision.

⚠ WARNING - Cargo loading

Make sure the engine is off, the automatic transaxle is in P (Park) and the parking brake is securely applied whenever loading or unloading cargo. Failure to take these steps may allow the vehicle to move if the shift lever is inadvertently moved to another position.

SEAT BELTS

Seat belt restraint system

⚠ WARNING - Twisted seat belt

Make sure your seat belt is not twisted when worn. A twisted seat belt may not properly protect you in an accident and could even cut into your body.

⚠ WARNING - Shoulder Belt

- **Never wear the shoulder belt under your arm or behind your back. An improperly positioned shoulder belt cannot protect the occupant in a crash.**
- **Always wear both the shoulder portion and lap portion of the lap/shoulder belt.**

⚠ WARNING - Damaged seat belt

Replace the entire seat belt assembly if any part of the webbing or hardware is damaged as you can no longer be sure that a damaged seat belt will provide protection in a crash.

Seat belts are designed to bear upon the bony structure of the body, and should be worn low across the front of the pelvis, chest and shoulders, as applicable; wearing the lap section of the belt across the abdominal area must be avoided.

Seat belts should be adjusted as firmly as possible, consistent with comfort, to provide the protection for which they have been designed.

A slack belt will greatly reduce the protection afforded to the wearer.

Care should be taken to avoid contamination of the webbing with polishes, oils and chemicals, and particularly battery acid. Cleaning may safely be carried out using mild soap and water. The belt should be replaced if webbing becomes frayed, contaminated or damaged.

- For maximum restraint system protection, the seat belts must always be used whenever the vehicle is moving. A properly positioned shoulder belt should be positioned midway over your shoulder across your collarbone.
- Never allow children to ride in the front passenger seat. See child restraint system section for further discussion.

- No modifications or additions should be made by the user which would either prevent the seat belt adjusting devices from operating to remove slack, or prevent the seat belt assembly from being adjusted to remove slack.
- When you fasten the seat belt, be careful not to latch the seat belt in buckles of other seat. It's very dangerous and you may not be protected by the seat belt properly.
- Do not unfasten the seat belt and do not fasten and unfasten the seat belt repeatedly while driving. This could result in loss of control, and an accident causing death, serious injury, or property damage.
- When fastening the seat belt, make sure that the seat belt does not pass over objects that are hard or can break easily.

⚠ WARNING - Seat belt buckle

Do not allow foreign material (gum, crumbs, coins, etc.) to obstruct the seat belt buckle. This may prevent the seat belt from fastening securely.

Seat belt warning

The driver's seat and passenger's seat belt warning light and warning chime will activate pursuant to the following table when the ignition switch is in “ON” position.

Conditions		Warning Pattern	
Seat Belt	Vehicle Speed	Light-Blink	Chime-Sound
Unbuckled		6 seconds	
Buckled		6 seconds	None
Buckled → Unbuckled	Below 5 km/h (3 mph)	6 seconds	None
	5 km/h (3 mph) ~ 10 km/h (6 mph)	6 seconds	
	Above 10 km/h (6 mph)	6 sec. on / 24 sec. off (11 times)	
Unbuckled	Above 10 km/h (6 mph) → Below 5 km/h (3 mph)	6 seconds *1 ↓ Stop *2	

*1 Warning pattern repeats 11 times with an interval of 24 seconds. If the driver's seat belt is buckled, the light will stop within 6 seconds and chime will stop immediately.

*2 The light will stop within 6 seconds and chime will stop immediately.

Seat belt - Driver's 3-point system with emergency locking retractor

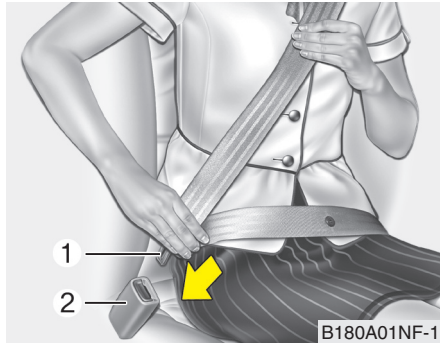

To fasten your seat belt:

To fasten your seat belt, pull it out of the retractor and insert the metal tab (1) into the buckle (2). There will be an audible "click" when the tab locks into the buckle.

⚠ WARNING

You should place the lap belt portion as low as possible and snugly across your hips, not on your waist. If the lap belt is located too high on your waist, it may increase the chance of injury in the event of a collision. Both arms should not be under or over the belt. Rather, one should be over and the other under, as shown in the illustration.

Never wear the seat belt under the arm near the door.

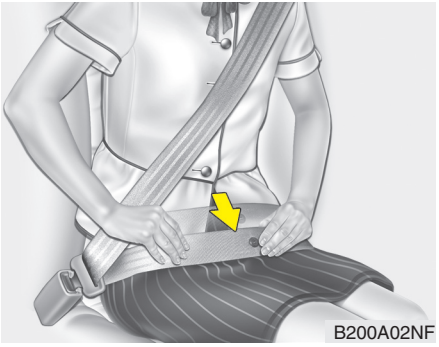

The seat belt automatically adjusts to the proper length only after the lap belt portion is adjusted manually so that it fits snugly around your hips. If you lean forward in a slow, easy motion, the belt will extend and let you move around. If there is a sudden stop or impact, however, the belt will lock into position. It will also lock if you try to lean forward too quickly.

✻ NOTICE

If you are not able to pull out the seat belt from the retractor, firmly pull the belt out and release it. Then you will be able to pull the belt out smoothly.

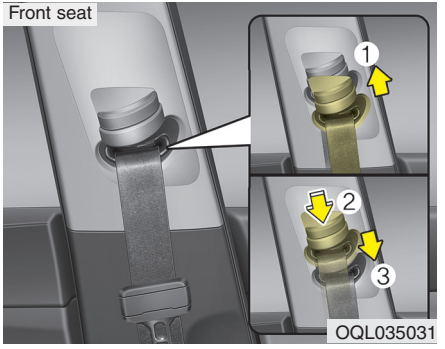

Height adjustment

You can adjust the height of the shoulder belt anchor to one of the 4 positions for maximum comfort and safety.

The height of the adjusting seat belt should not be too close to your neck. The shoulder portion should be adjusted so that it lies across your chest and midway over your shoulder near the door and not your neck.

To adjust the height of the seat belt anchor, lower or raise the height adjuster into an appropriate position.

To raise the height adjuster, pull it up (1). To lower it, push it down (3) while pressing the height adjuster button (2).

Release the button to lock the anchor into position. Try sliding the height adjuster to make sure that it has locked into position.

Improperly positioned seat belts can cause serious injuries in an accident.

⚠ WARNING - Shoulder belt positioning

Never position the shoulder belt across your neck or face.

⚠ WARNING - Seat belt replacement

Replace your seat belts after being in an accident. Failure to replace seat belts after an accident could leave you with damaged seat belts that will not provide protection in the event of another collision.

Rear center seatbelt

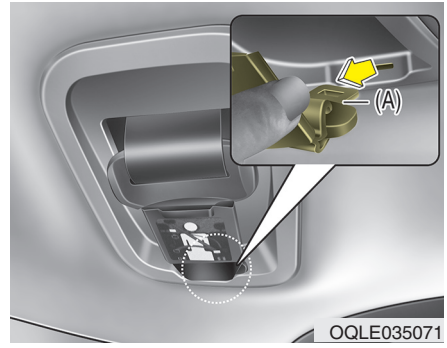

To fasten your seatbelt:

1. Pull out the tongue plate (A) from the hole on the belt assembly cover.

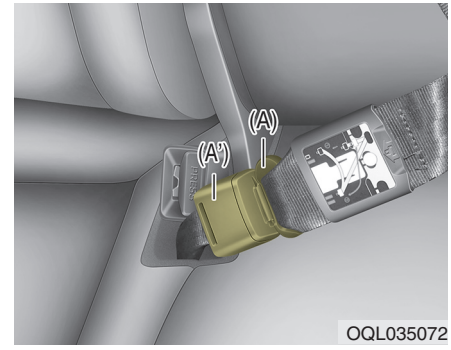

2. Insert the tongue plate (A) into the buckle (A') until an audible "click" is heard, indicating the latch is locked. Make sure the belt is not twisted.

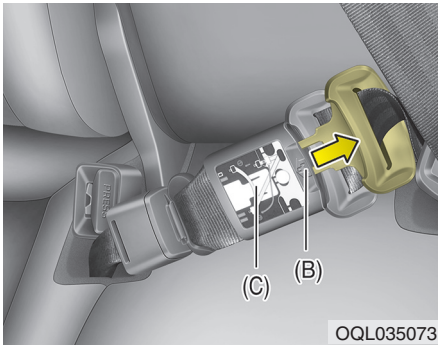

3. Pull out the tongue plate (B) from the pocket (C).

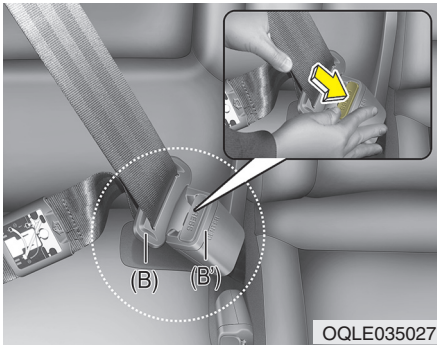

4. Pull the tongue plate (B) and insert it into the buckle (B') until an audible "click" is heard, indicating the latch is locked. Make sure the belt is not twisted.

When using the rear center seat belt, the buckle with the "CENTER" mark must be used.

✻ NOTICE

If you are not able to pull out the safety belt from the retractor, firmly pull the belt out and release it. After release, you will be able to pull the belt out smoothly.

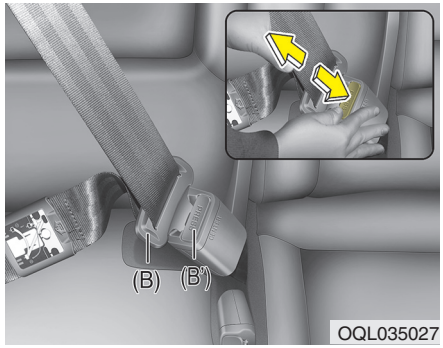

To release your seatbelt:

1. Press the release button on the buckle (B') and remove the tongue plate (B).

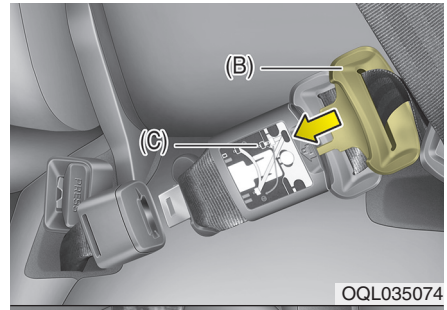

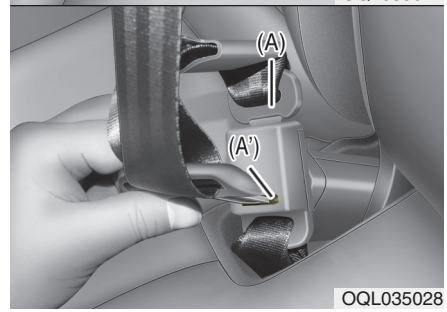

2. Insert the tongue plate (B) into the pocket (C)
3. To retract the rear center seatbelt, insert the tongue plate into the web release hole (A'). Pull up on the seat belt web and allow the webbing to retract automatically.

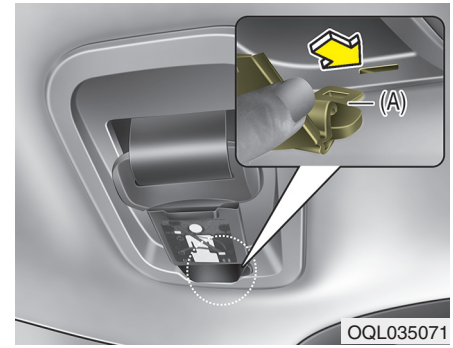

4. Insert the tongue plate (A) into the hole on the belt assembly cover.

Stowing the rear seat belt

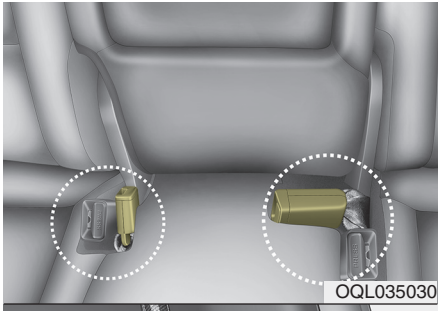

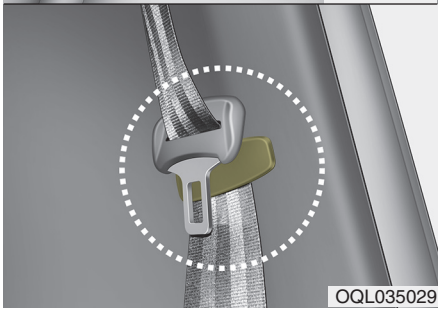

- The rear seat belt buckles can be stowed in the pocket between the rear seatback and cushion when not in use.
- The center seat belt can be stowed with the plate and webbing rolled in the pocket between the rear seat-back and cushion.
- Routing the seat belt webbing through the rear seat belt guides will help keep the belts from being trapped behind or under the seats.

  After inserting the seat belt, tighten the belt webbing by pulling it up.

⚠ CAUTION

Take the seatbelt out of the seat-belt guide prior to using it. If you pull the seat belt when it is stored in the guides, it may damage the guides and/or the belt webbing.

⚠ WARNING

Prior to fastening the rear seat belts, ensure the latch matches the seat belt buckle. Forcefully fastening the left or right seat belt to the center buckle can result in an improper fastening scenario that will not protect you in an accident.

Pre-tensioner seat belt

Your vehicle is equipped with driver's and front passenger's pre-tensioner seat belts (retractor pretensioner and EFD (Emergency Fastening Device)). The pre-tensioner seat belts may be activated, when a frontal collision is severe enough, together with the air bags.

When the vehicle stops suddenly, or if the occupant tries to lean forward too quickly, the seat belt retractor may lock into position. In certain frontal collisions, the pre-tensioner will activate and pull the seat belt into tighter contact against the occupant's body.

(1) Retractor Pretensioner

The purpose of the retractor pretensioner is to make sure that the shoulder belts fit in tightly against the occupant's upper body in certain frontal collisions.

(2) EFD
(Emergency Fastening Device)

The purpose of the EFD is to make sure that the pelvis belts fit in tightly against the occupant's lower body in certain frontal collisions.

If the system senses excessive tension on the driver or passenger's seat belt when the pre-tensioner system activates, the load limiter inside the retractor pre-tensioner will release some of the pressure on the affected seat belt.

✻ NOTICE

The pre-tensioner will activate not only in a frontal collision but also in a side collision, if the vehicle is equipped with a side or curtain air bag.

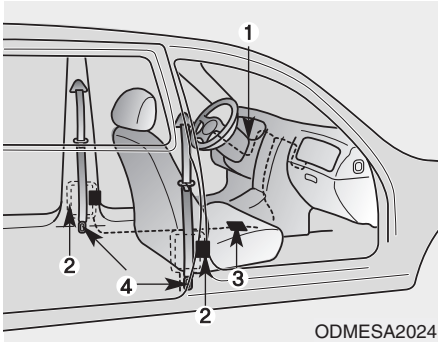

The seat belt pre-tensioner system consists mainly of the following components. Their locations are shown in the illustration:

(1) SRS air bag warning light
(2) Front retractor pre-tensioner assembly
(3) SRS control module
(4) Emergency fastening device (EFD)

⚠ WARNING - Skin Irritation

Wash all exposed skin areas thoroughly after an accident in which the pre-tensioner seat belts were activated. The fine dust from the pre-tensioner activation may cause skin irritation and should not be breathed for prolonged periods.

✻ NOTICE

- **Both the driver's and front passenger's seat belt pre-tensioner system may be activated not only in certain frontal collision, but also in certain side collisions or rollovers.**
- **Because the sensor that activates the SRS air bag is connected with the pre-tensioner seat belt, the SRS air bag warning light on the instrument panel will illuminate for approximately 6 seconds after the ignition switch has been turned to the ON position, and then it should turn off.**

If the pre-tensioner seat belt system is not working properly, this warning light will illuminate even if there is not a malfunction with the SRS air bag. If the SRS air bag warning light does not illuminate when the ignition switch is turned ON, or if it remains illuminated after illuminating for approximately 6 seconds, or if it illuminates while the vehicle is being driven, have an authorized Kia dealer inspect the pre-tensioner seat belt and SRS air bag system as soon as possible.

✻ NOTICE

Do not attempt to service or repair the pre-tensioner seat belt system in any manner. Do not attempt to inspect or replace the pre-tensioner seat belts yourself. This must be done by an authorized Kia dealer.

✻ NOTICE

When the pre-tensioner seat belts are activated, a loud noise may be heard and fine dust, which may appear to be smoke, may be visible in the passenger compartment. These are normal operating conditions and are not hazardous.

⚠ WARNING - Hot pretensioner

Do not touch the pre-tensioner seat belt assemblies for several minutes after they have been activated. When the pre-tensioner seat belt mechanism fires during a collision the pre-tensioner becomes hot and can burn you.

Pre-tensioners are designed to operate only one time. After activation, pre-tensioner seat belts must be replaced. If the pre-tensioner must be replaced, contact an authorized Kia dealer.

Seat belt precautions

Infant or small child

Most countries have child restraint laws. You should be aware of the specific requirements in your country. Child and/or infant seats must be properly placed and installed in the rear seat. For more information about the use of these restraints, refer to “Child restraint system” in this section.

✻ NOTICE

Small children are best protected from injury in an accident when properly restrained in the rear seat by a child restraint system that meets the requirements of the Safety Standards of your country. Before buying any child restraint system, make sure that it has a label certifying that it meets Safety Standard of your country. The restraint must be appropriate for your child's height and weight. Check the label on the child restraint for this information. Refer to “Child restraint system” in this section.

Larger children

Children who are too large for child restraint systems should always occupy the rear seat and use the available lap/shoulder belts. The lap portion should be fastened and snugged on the hips as low as possible. Check periodically to insure that the belt fits. A child's squirming could put the belt out of position. Children are given the most safety in the event of an accident when they are restrained by a proper restraint system in the rear seat. If a larger child (over age 13) must be seated in the front seat, the child should be securely restrained by the available lap/shoulder belt and the seat should be placed in the rearmost position. Children age 13 and under should be restrained securely in the rear seat. NEVER place a child age 13 and under in the front seat. NEVER place a rear facing child seat in the front seat of a vehicle.

If the shoulder belt portion slightly touches the child’s neck or face, try placing the child closer to the center of the vehicle. If the shoulder belt still touches their face or neck they need to be returned to a child restraint system.

⚠ WARNING - Small children

Do not allow small children to ride in the vehicle without an appropriate child restraint system. If the shoulder belt comes in contact with your child's neck or face your child is too small to ride in the vehicle. In a crash the seat belt will inflict injury to your child's neck, throat and face.

Restraint of pregnant women

Pregnant women should wear lap/shoulder belt assemblies whenever possible according to specific recommendations by their doctors. The lap portion of the belt should be worn AS SECURELY AND LOW AS POSSIBLE.

⚠ WARNING - Pregnant women

Pregnant women must never place the lap portion of the seat belt above or on the abdomen where the fetus is located. The force of the seat belt during a collision will crush the fetus.

Injured person

A seat belt should be used when an injured person is being transported. When this is necessary, you should consult a physician for recommendations.

One person per belt

Two people (including children) should never attempt to use a single seat belt. This could increase the severity of injuries in case of an accident.

Do not lie down

To reduce the chance of injuries in the event of an accident and to achieve maximum effectiveness of the restraint system, all passengers should be sitting up and the front and rear seats should be in an upright position when the vehicle is moving. A seat belt cannot provide proper protection if the person is lying down in the rear seat or if the front and rear seats are in a reclined position.

Care of seat belts

Seat belt systems should never be disassembled or modified. In addition, care should be taken to assure that seat belts and belt hardware are not damaged by seat hinges, doors or other abuse.

⚠ WARNING - Pinched seat belt

Make sure that the webbing and/or buckle does not get caught or pinched in the rear seat when returning the rear seatback to its upright position. A caught or pinched webbing/ buckle may become damaged and could fail during a collision or sudden stop.

⚠ WARNING

Seatbelts can become hot in a vehicle that has been closed up in sunny weather. They could burn infants and children.

Periodic inspection

All seat belts should be inspected periodically for wear or damage of any kind. Any damaged parts should be replaced as soon as possible.

Keep belts clean and dry

Seat belts should be kept clean and dry. If belts become dirty, they can be cleaned by using a mild soap solution and warm water. Bleach, dye, strong detergents or abrasives should not be used because they may damage and weaken the fabric.

When to replace seat belts

The entire in-use seat belt assembly or assemblies should be replaced if the vehicle has been involved in an accident. This should be done even if no damage is visible. Additional questions concerning seat belt operation should be directed to an authorized Kia dealer.

CHILD RESTRAINT SYSTEM (CRS)

Children Always in the Rear

⚠ WARNING - Restraint Location

Never install a child or infant seat on the front passenger's seat. A child riding in the front passenger seat can be forcefully struck by an inflating airbag and seriously injured.

⚠ WARNING - Hot Child Restraint

A child restraint system can become very hot if it is left in a closed vehicle on a sunny day. Be sure to check the seat cover, buckles and latches before placing a child in the restraint system.

Children under age 13 must always ride in the rear seats and must always be properly restrained to minimize the risk of injury in an accident, sudden stop or sudden maneuver. According to accident statistics, children are safer when properly restrained in the rear seats than in the front seat. Even with air bags, children can be seriously injured or killed. Children too large for a child restraint must use the seat belts provided.

Most countries have child restraint laws which require children to travel in approved child restraint devices. The laws governing the age or height/weight restrictions at which seat belts can be used instead of child restraints differs among countries, so you should be aware of the specific requirements in your country, and where you are travelling.

Child restraint systems must be properly placed and installed in the rear seat. You must use a commercially available child restraint system that meets the requirements of the Safety Standards of your country.

Child restraint systems are generally designed to be secured in a vehicle seat by lap belt portion of a lap/shoulder belt, or by a LATCH system in the rear seats of the vehicle.

Child restraint system (CRS)

Infants and younger children must be restrained in an appropriate rear-facing or forward-facing CRS that has first been properly secured to the rear seat of the vehicle. Read and comply with the instructions for installation and use provided by the manufacturer of the child restraint.

⚠ WARNING
- Child Restraint Installation

An improperly secured child restraint can increase the risk of serious injury or death in an accident. Always take the following precautions when using a child restraint system:

- **Always follow the child restraint system manufacturer's instructions for installation and use.**

(Continued)

(Continued)

- **Always properly restrain your child in the child restraint.**
- **If the vehicle head restraint prevents proper installation of a child seat (as described in the child restraint system manual), the head restraint of the respective seating position shall be readjusted or entirely removed.**
- **Do not use an infant carrier or a child safety seat that "hooks" over a seatback, it may not provide adequate protection in an accident.**
- **After an accident, have a Kia dealer check the child restraint system, seat belts, tether anchors and lower anchors.**

Selecting a Child Restraint System (CRS)

When selecting a CRS for your child, always:

- Make sure the CRS has a label certifying that it meets applicable Safety Standards of your country.
- Select a child restraint based on your child's height and weight. The required label or the instructions for use typically provide this information.
- Select a child restraint that fits the vehicle seating position where it will be used.
- Read and comply with the warnings and instructions for installation and use provided with the child restraint system.

⚠ WARNING - Holding Children

Never hold a child in your arms or lap when riding in a vehicle. The violent forces created during a crash will tear the child from your arms and throw the child against the car's interior. Always use a child restraint system which is appropriate for your child's height and weight.

⚠ WARNING - Unattended Children

Never leave children unattended in a vehicle. The car can heat up very quickly, resulting in injuries to the child in the vehicle.

⚠ WARNING - Seat Belt Use

Do not use one seat belt for two occupants at the same time. This will eliminate any safety benefit provided by the seat belt to the occupants.

Child restraint system types

There are three main types of child restraint systems: rear-facing seats, forward-facing seats, and booster seats. They are classified according to the child's age, height and weight.

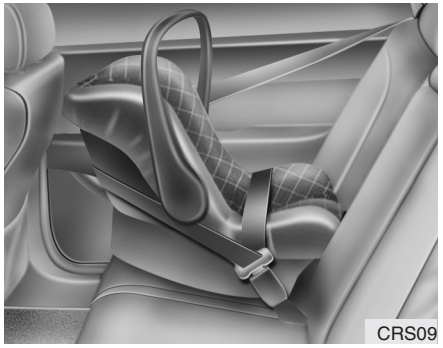

Rear-facing child seats

A rear-facing child seat provides restraint with the seating surface against the back of the child. The harness system holds the child in place, and in an accident, acts to keep the child positioned in the seat and reduces the stress to the neck and spinal cord.

All children under age one must always ride in a rear-facing infant child restraint.

Convertible and 3-in-1 child seats typically have higher height and weight limits for the rear-facing position, allowing you to keep your child rear-facing for a longer period of time.

Continue to use a rear-facing child seat for as long as your child will fit within the height and weight limits allowed by the child seat manufacturer. It's the best way to keep them safe. Once your child has outgrown the rear-facing child restraint, your child is ready for a forward-facing child restraint with a harness.

Forward-facing child restraints

A forward-facing child seat provides restraint for the child's body with a harness. Keep children in a forward-facing child seat with a harness until they reach the top height or weight limit allowed by your child restraint's manufacturer.

Once your child outgrows the forward-facing child restraint, your child is ready for a booster seat.

Booster seats

A booster seat is a restraint designed to improve the fit of the vehicle's seat belt system. A booster seat positions the seat belt so that it fits properly over the lap of your child.

Keep your child in a booster seat until they are big enough to sit in the seat without a booster and still have the seat belt fit properly. For a seat belt to fit properly, the lap belt must lie snugly across the upper thighs, not the stomach. The shoulder belt should lie snug across the shoulder and chest and not across the neck or face. Children under age 13 must always ride in the rear seats and must always be properly restrained to minimize the risk of injury.

Installing a Child Restraint System (CRS)

After selecting a proper child seat for your child, check to make sure it fits properly in your vehicle. Follow the instructions provided by the manufacturer when installing the child seat. Note these general steps when installing the seat to your vehicle:

- **Properly secure the child restraint to the vehicle.** All child restraints must be secured to the vehicle with the lap part of a lap/shoulder belt or with the LATCH system.
- **Make sure the child restraint is firmly secured.** After installing a child restraint to the vehicle, push and pull the seat forward and from side-to-side to verify that it is securely attached to the seat. A child restraint secured with a seat belt should be installed as firmly as possible. However, some side-to-side movement can be expected.
- **Secure the child in the child restraint.** Make sure the child is properly strapped in the child restraint according to the manufacturer instructions.

Lower Anchors and Tether for Children (LATCH) System

The LATCH system holds a child restraint during driving and in an accident. This system is designed to make installation of the child restraint easier and reduce the possibility of improperly installing your child restraint. The LATCH system uses anchors in the vehicle and attachments on the child restraint. The LATCH system eliminates the need to use seat belts to secure the child restraint to the rear seats.

Lower anchors are metal bars built into the vehicle. There are two lower anchors for each LATCH seating position that will accommodate a child restraint with lower attachments.

To use the LATCH system in your vehicle, you must have a child restraint with LATCH attachments.

The child seat manufacturer will provide you with instructions on how to use the child seat with its attachments for the LATCH lower anchors.

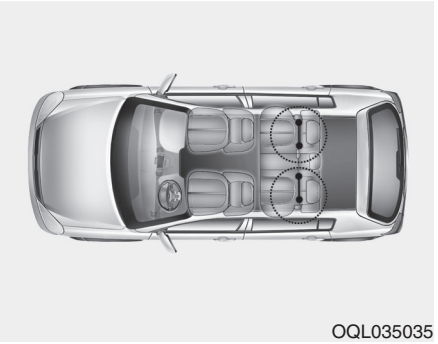

OQL035035

LATCH anchors have been provided in the left and right outboard rear seating positions. Their locations are shown in the illustration. There are no LATCH anchors provided for the center rear seating position.

⚠ WARNING - LATCH Lower Anchors

Never attempt to attach a LATCH equipped seat in the center seating position. LATCH lower anchors are only to be used in the left and right rear outboard seating positions. You may damage the anchors or the anchors may fail and break in a collision.

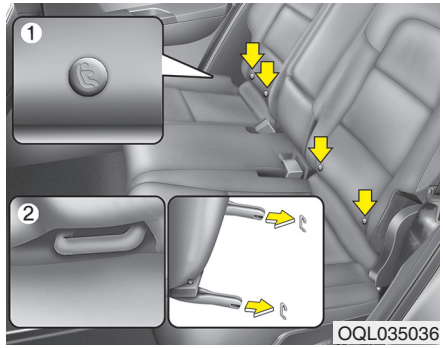

The lower anchor position indicator symbols are located on the left and right rear seat backs to identify the position of the lower anchors in your vehicle (see arrows in illustration).

The LATCH anchors are located between the seatback and the seat cushion of the rear seat left and right outboard seating positions.

To use the lower anchor, push the upper portion of the lower anchor cover.

❊ (1) : Lower Anchor position indicator
(2) : Lower Anchor

Securing a child restraint with the LATCH anchors system

To install a LATCH-compatible child restraint in either of the rear outboard seating positions:

1. Move the seat belt buckle away from the lower anchors.
2. Move any other objects away from the anchors that could prevent a secure connection between the child restraint and the lower anchors.
3. Place the child restraint on the vehicle seat, then attach the seat to the lower anchors according to the instructions provided by the child restraint manufacturer.
4. Follow the child restraint instructions for properly adjusting and tightening the lower attachments on the child restraint to the lower anchors.

⚠ WARNING

Take the following precautions when using the LATCH system:

- **Read and follow all installation instructions provided with your child restraint system.**
- **To prevent the child from reaching and taking hold of unretracted seat belts, buckle all unused rear seat belts and retract the seat belt webbing behind the child. Children can be strangled if a shoulder belt becomes wrapped around their neck and the seat belt tightens.**
- **NEVER attach more than one child restraint to a single anchor. This could cause the anchor or attachment to come loose or break.**
- **Always have the LATCH system inspected by your authorized Kia dealer after an accident. An accident can damage the LATCH system and may not properly secure the child restraint.**

Securing a child restraint seat with "Tether Anchor" system

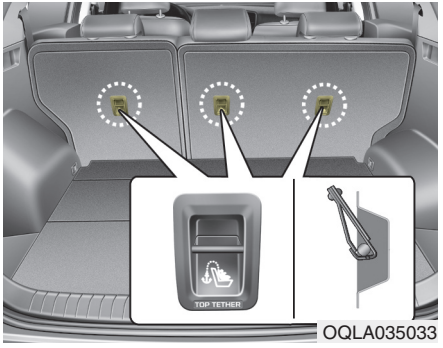

OQLA035033

First secure the child restraint with the LATCH lower anchors or the seat belt. If the child restraint manufacturer recommends that the top tether strap be attached, attach and tighten the top tether strap to the top tether strap anchor.

Child restraint system top tether anchorages are located on the back of the rear seatbacks.

⚠ WARNING

Take the following precautions when installing the tether strap:

- **Read and follow all installation instructions provided with your child restraint system.**
- **NEVER attach more than one child restraint to a single tether anchor. This could cause the anchor or attachment to come loose or break.**
- **Do not attach the tether strap to anything other than the correct tether anchor. It may not work properly if attached to something else.**
- **Do not use the tether anchors for adult seat belts or harnesses, or for attaching other items or equipment to the vehicle.**
- **Always fasten the seatbelts behind the child restraint seat when they are not used to secure the child seat. Failure to do so may result in child strangulation.**

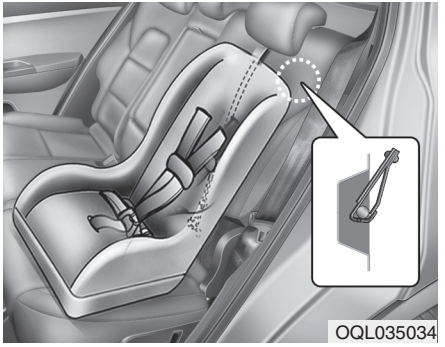
OQL035034

To install the tether anchor:

1. Route the child restraint tether strap over the child restraint seatback. Route the tether strap under the head restraint and between the head restraint posts, or route the tether strap over the top of the vehicle seatback. Make sure the strap is not twisted.
2. Connect the tether strap hook to the tether anchor, then tighten the tether strap according to the child seat manufacturer's instructions to firmly secure the child restraint to the seat.

3. Check that the child restraint is securely attached to the seat by pushing and pulling the seat forward and from side-to-side.

Securing a child restraint with a lap belt or lap/shoulder belt

When not using the LATCH system, all child restraints must be secured to a vehicle rear seat with the lap part of a lap/shoulder belt.

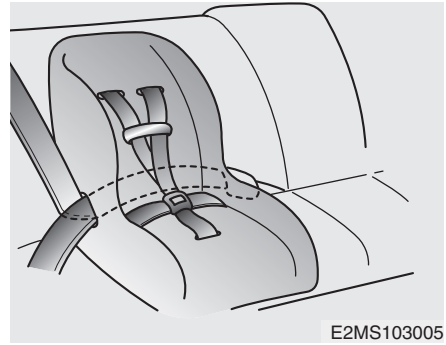
E2MS103005

Automatic locking mode

Since all passenger seat belts move freely under normal conditions and only lock under extreme or emergency conditions (emergency locking mode), you must manually pull the seat belt all the way out to shift the retractor to the “Automatic Locking” mode to secure a child restraint.

The “Automatic Locking” mode will help prevent the normal movement of the child in the vehicle from causing the seat belt to loosen and compromise the child restraint system. To secure a child restraint system, use the following procedure.

To install a child restraint system on the rear seats, do the following:

1. Place the child restraint system on a rear seat and route the lap/ shoulder belt around or through the child restraint, following the restraint manufacturer’s instructions.

   Be sure the seat belt webbing is not twisted.

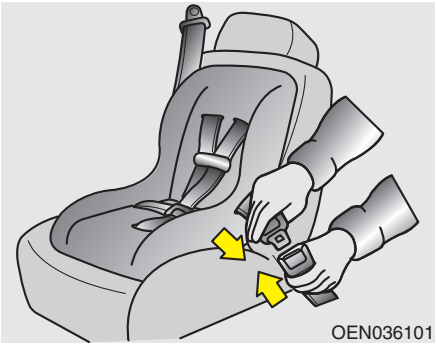

2. Fasten the lap/shoulder belt latch into the buckle. Listen for the distinct "click" sound.

   Position the release button so that it is easy to access in case of an emergency.

3. Pull the shoulder portion of the seat belt all the way out. When the shoulder portion of the seat belt is fully extended, it will shift the retractor to the "Automatic Locking" (child restraint) mode.

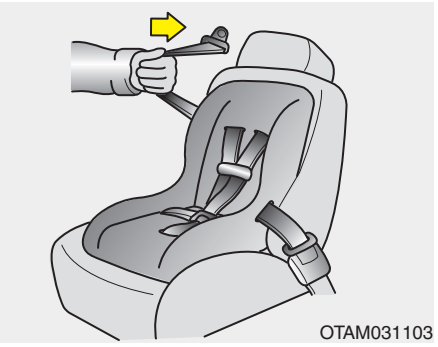

4. Slowly allow the shoulder portion of the seat belt to retract and listen for an audible "clicking" or "ratcheting" sound. This indicates that the retractor is in the "Automatic Locking" mode. If no distinct sound is heard, repeat steps 3 and 4.

5. Remove as much slack from the belt as possible by pushing down on the child restraint system while feeding the shoulder belt back into the retractor.
6. Push and pull on the child restraint system to confirm that the seat belt is holding it firmly in place. If it is not, release the seat belt and repeat steps 2 through 6.
7. Double check that the retractor is in the "Automatic Locking" mode by attempting to pull more of the seat belt out of the retractor. If you cannot, the retractor is in the "Automatic Locking" mode.

If your CRS manufacturer instructs or recommends you to use a tether anchor with the lap/shoulder belt, refer to the previous pages for more information.

✻ NOTICE

When the seat belt is allowed to retract to its fully stowed position, the retractor will automatically switch from the "Automatic Locking" mode to the emergency lock mode for normal adult usage.

⚠ WARNING - Auto lock mode

Set the retractor to Automatic Lock mode when installing any child restraint system. If the retractor is not in the Automatic Locking mode, the child restraint can move when your vehicle turns or stops suddenly.

To remove the child restraint, press the release button on the buckle and then pull the lap/shoulder belt out of the restraint and allow the seat belt to retract fully.

AIR BAG - ADVANCED SUPPLEMENTAL RESTRAINT SYSTEM

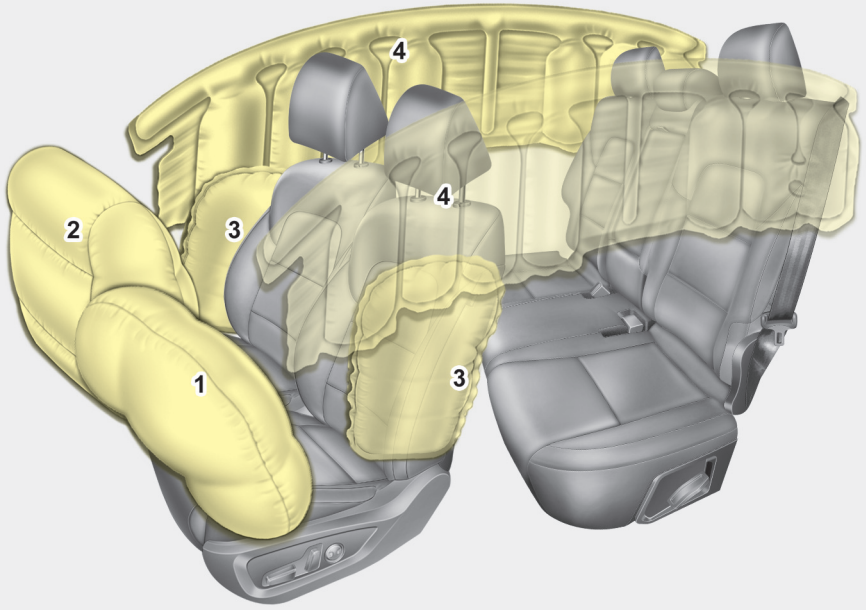

The actual air bags in the vehicle may differ from the illustration.

OQLA035085

(1) Driver's front air bag
(2) Passenger's front air bag
(3) Side air bag
(4) Curtain air bag

⚠ WARNING

Even in vehicles with air bags, you and your passengers must always wear the safety belts provided in order to minimize the risk and severity of injury in the event of a collision or rollover.

How does the air bag system operate?

- Air bags are activated (able to inflate if necessary) only when the ignition switch is turned to the ON or START position.
- The appropriate air bags inflate instantly in the event of a serious frontal collision or side collision in order to help protect the occupants from serious physical injury.
- Generally, air bags are designed to inflate based upon the severity of a collision and its direction. These two factors determine whether the sensors produce an electronic deployment/ inflation signal.
- Air bag deployment depends on a number of factors including vehicle speed, angles of impact, and, the density and stiffness of the vehicles or objects which your vehicle hits in the collision. The determining factors are not limited to those mentioned above.
- The front air bags will completely inflate and deflate in an instant.

  It is virtually impossible for you to see the air bags inflate during an accident.

  It is much more likely that you will simply see the deflated air bags hanging out of their storage compartments after the collision.
- In addition to inflating in serious side collisions, side and/or curtain air bags will inflate if the sensing system detects a rollover.
- When a rollover is detected curtain air bags will remain inflated longer to help provide protection from ejection, especially when used in conjunction with the seat belts.
- In order to help provide protection, the air bags must inflate rapidly. The speed of the air bag inflation is a consequence of extremely short time in which to inflate the air bag between the occupant and the vehicle structures before the occupant impacts those structures. This speed of inflation reduces the risk of serious or life-threatening injuries and is thus a necessary part of the air bag design.

  However, air bag inflation can also cause injuries which can include facial abrasions, bruises and broken bones because the inflation speed also causes the air bags to expand with a great deal of force.
- **There are even circumstances under which contact with the steering wheel or passenger air bag can cause fatal injuries, especially if the occupant is positioned excessively close to the steering wheel or passenger air bag.**

⚠ WARNING - Airbag inflation

Sit as far back as possible from the steering wheel while still maintaining comfortable control of your vehicle. A distance of at least 25 cm (10 in.) from your chest to the steering wheel is recommended. Failure to do so can result in airbag inflation injuries to the driver.

Noise and smoke

When inflated, the air bags make a loud noise and leave smoke and powder in the air inside the vehicle. This is normal and is a result of the ignition of the air bag inflator. After the air bag inflates, you may feel substantial discomfort in breathing due to the contact of your chest with both the seat belt and the air bag, as well as from breathing the smoke and powder. **Open your doors and/or windows as soon as possible after impact in order to reduce discomfort and prevent prolonged exposure to the smoke and powder.**

Though smoke and powder are non-toxic, it may cause irritation to the skin (eyes, nose and throat, etc). If this is the case, wash and rinse with cold water immediately and consult a doctor if the symptom persists.

⚠ WARNING - Hot components

Do not touch the air bag storage area's internal components immediately after airbag inflation. The air bag related parts in the steering wheel, instrument panel and the roof rails above the front and rear doors are very hot. Hot components can result in burn injuries.

⚠ WARNING

Do not install or place any accessories near air bag deployment areas, such as the instrument panel, windows, pillars, and roof rails. Such objects may become dangerous projectiles if the air bag deploys.

Do not install a child restraint on the front passenger's seat.

1JBH3051

Never place a rear-facing child restraint in the front passenger's seat. If the air bag deploys, it would impact the rear-facing child restraint, causing serious or fatal injury.

In addition, do not place front-facing child restraints in the front passenger's seat. If the front passenger air bag inflates, it could cause serious or fatal injuries to the child.

⚠ WARNING - Air bag deployment

When children are seated in the rear outboard seats of a vehicle equipped with side and/or curtain air bags, install the child restraint system as far away from the door side as possible. Inflation of the side and/or curtain air bags could impact the child.

Air bag warning light

W7-147

The purpose of air bag warning light in your instrument panel is to alert you of a potential problem with your air bag system, which could include your side and/or curtain air bags used for rollover protection.

SRS components and functions

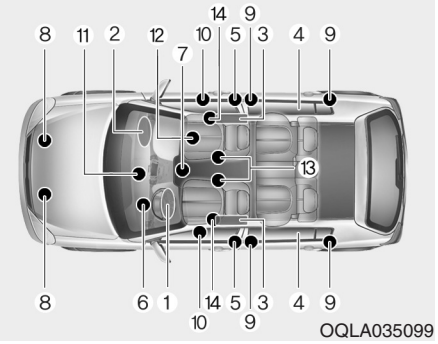

The SRS consists of the following components:

1. Driver's front air bag module
2. Passenger's front air bag module
3. Side air bag modules
4. Curtain air bag modules
5. Retractor pre-tensioner assemblies
6. Air bag warning light
7. SRS control module (SRSCM)/ Roll over sensor
8. Front impact sensors
9. Side impact sensors
10. Side pressure sensors
11. PASSENGER AIR BAG “OFF” indicator (Front passenger’s seat only)
12. Occupant detection system (Front passenger’s seat only)
13. Driver’s and front passenger’s seat belt buckle sensors
14. Emergency Fastening Device(EFD)

*: if equipped

If the air bag warning light is illuminated for more than 6 seconds after the ignition is turned on, or of it illuminates during vehicle operation, an SRS component may not be functioning properly and you should have your vehicle checked by an authorized Kia dealer.

If any of the following conditions occur, this indicates a malfunction in the air bag system. Have an authorized Kia dealer inspect the air bag system as soon as possible.

- The light does not turn on briefly when you turn the ignition ON.
- The light stays on after illuminating for approximately 6 seconds.
- The light comes on while the vehicle is in motion.
- The light blinks when the ignition switch is in ON position.

Driver's front air bag (1)

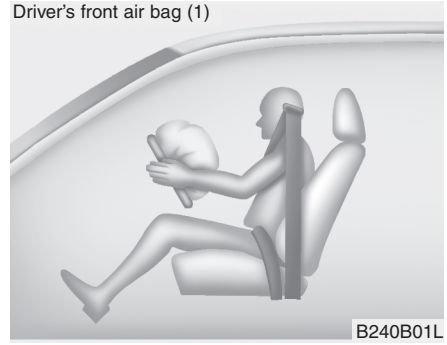

The front air bag modules are located both in the center of the steering wheel and in the front passenger's panel above the glove box. When the SRSCM detects a sufficiently severe impact to the front of the vehicle, it will automatically deploy the front air bags.

Driver's front air bag (2)

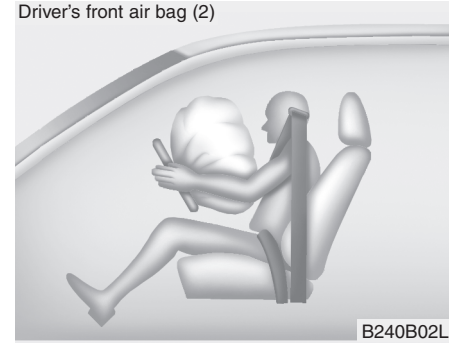

Upon deployment, tear seams molded directly into the pad covers will separate under pressure from the expansion of the air bags. Further opening of the covers then allows full inflation of the air bags.

Driver's front air bag (3)

A fully inflated air bag, in combination with a properly worn seat belt, slows the driver's or the passenger's forward motion, reducing the risk of head and chest injury.

After complete inflation, the air bag immediately starts deflating, enabling the driver to maintain forward visibility and the ability to steer or operate other controls.

Passenger's front air bag

⚠ WARNING - Air bag obstructions

Do not install or place any accessories on the steering wheel, instrument panel, or on the front passenger's panel above the glove box in a vehicle. Such objects may become dangerous projectiles if the air bag deploys.

⚠ WARNING - Flying objects

Do not place any objects (an umbrella, bag, etc.) between the front door and the front seat. Such objects may become dangerous projectiles if the side airbag inflates.

- If an air bag deploys, there may be a loud noise followed by a fine dust released in the vehicle. These conditions are normal and are not hazardous - the air bags are packed in this fine powder. The dust generated during air bag deployment may cause skin or eye irritation as well as aggravate asthma for some persons. Always wash all exposed skin areas thoroughly with cold water and a mild soap after an accident in which the air bags were deployed.

- The SRS can function only when the ignition switch is in the ON position. If the SRS air bag warning light does not illuminate, or continuously remains on after illuminating for about 6 seconds when the ignition switch is turned to the ON position, or after the engine is started, comes on while driving, the SRS is not working properly. If this occurs, have your vehicle immediately inspected by an authorized Kia dealer.

✻ NOTICE

Before you replace a fuse or disconnect a battery terminal, turn the ignition switch to the LOCK position and remove the ignition switch. Never remove or replace the air bag related fuse(s) when the ignition switch is in the ON position. Failure to heed this warning will cause the SRS air bag warning light to illuminate.

Occupant Detection System (ODS)

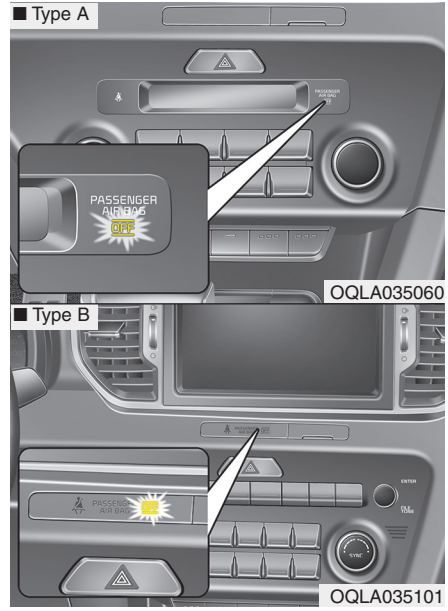

Your vehicle is equipped with an occupant detection system in the front passenger's seat.

The occupant detection system is designed to detect the presence of a properly-seated front passenger and determine if the passenger's front air bag should be enabled (may inflate) or not. Only the front passenger front air bag is controlled by the Occupant Detection System.

Do not put anything in front of the passenger air bag OFF indicator.

Main components of the occupant detection system

- A detection device located within the front passenger seat cushion.
- An electronic system which determines whether the passenger air bag systems should be activated or deactivated.
- An indicator light located on the instrument panel which illuminates the words PASSENGER AIR BAG “OFF” indicates the front passenger air bag system is deactivated.
- The instrument panel air bag warning light is interconnected with the occupant detection system.

If the front passenger seat is occupied by a person that the system determines to be of appropriate size, and he/she sits properly (sitting upright with the seatback in an upright position, centered on the seat cushion with their seat belt on, legs comfortably extended and their feet on the floor), the PASSENGER AIR BAG “OFF” indicator will turn off and the front passenger's air bag will be able to inflate, if necessary, in frontal crashes.

You will find the PASSENGER AIR BAG “OFF” indicator on the center facia panel. This system detects the conditions 1~4 in the following table and activates or deactivates the front passenger air bag based on these conditions.

Always be sure that you and all vehicle occupants are seated and restrained properly (sitting upright with the seat in an upright position, centered on the seat cushion, with the person’s legs comfortably extended, feet on the floor, and wearing the safety belt properly) for the most effective protection by the air bag and the safety belt.

- The ODS (Occupant Detection System) may not function properly if the passenger takes actions which can defeat the detection system. These include:

(1) Failing to sit in an upright position.

(2) Leaning against the door or center console.

(3) Sitting towards the sides or the front of the seat.

(4) Putting legs on the dashboard or resting them on other locations which reduce the passenger weight on the front seat.

(5) Improperly wearing the safety belt.

(6) Reclining the seat back.

Condition and operation in the front passenger occupant detection system

Condition detected by the occupant classification system	Indicator/Warning light		Devices
	"PASSENGER AIR BAG OFF" indicator light	SRS warning light	Front passenger air bag
1. Adult*1	Off	Off	Activated
2. Child restraint system with child under 12 months old *2 *3 *4	On	Off	Deactivated
3. Unoccupied	On	Off	Deactivated
4. Malfunction in the system	Off	On	Activated

*1 The system judges a person of adult size as an adult. When a smaller adult sits in the front passenger seat, the system may recognize him/her as a child depending on his/her physique and posture.

*2 Do not allow children to ride in the front passenger seat. When a larger child who has outgrown a child restraint system sits in the front passenger seat, the system may recognize him/her as an adult depending upon his/her physique or sitting position.

*3 Never install a child restraint system on the front passenger seat.

*4 The PASSENGER AIR BAG "OFF" indicator may turn on or off when a child above 12 months to 12 years old (with or without child restraint system) sits in the front passenger seat. This is a normal condition.

⚠ CAUTION

Do not alter or remodel the ODS (Occupant Detection System). This may damage the system and prevent it from functioning properly in a collision.

✻ NOTICE

- Do not use car seat cushions that cover up the surface of the seat and aftermarket manufactured passenger seat heaters.
- After conducting car interior cleaning using steam or detergent, the seat should be dried properly. Afterward, check for normal operation of the “PASS AIR BAG “OFF”” and air bag warning lights.
- Any service related to the passenger seat and the ODS must be done at a Kia service center.
- After the passenger seat has been removed or installed for repair purposes, check for normal operation of the “PASS AIR BAG “OFF”” and air bag warning lights with a person seated or not seated in the passenger seat.

⚠ WARNING

When the passenger is not sitting properly in the passenger seat, or some items are placed on or under the passenger seat, it may interfere with normal operation of the ODS (Occupant Detection System). In order for the driver and all passengers to receive maximum benefit from the airbag and seat belt system, all persons should seat and wear the seat belt properly.

✻ NOTICE

When the “PASS AIR BAG “OFF”” symbol is illuminated, the passenger air bag system will not operate. The passenger air bag system will operate when necessary if the symbol is not illuminated.

✻ NOTICE

Do not modify or replace the front passenger seat. Don't place anything on or attach anything such as a blanket, front seat cover or after market seat heater to the front passenger seat. This can adversely affect the occupant detection system.

⚠ WARNING - ODS System

Riding in an improper position adversely affects the Occupant Detection System and may result in the deactivation of the front passenger airbag. It is important for the driver to instruct the passenger as to the proper seating instructions as contained in this manual.

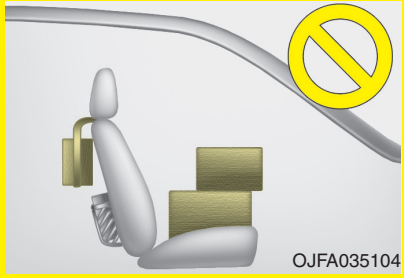

- **Do not place a heavy loads in the front passenger seatback pocket or on the front passenger seat.**

(Continued)

(Continued)

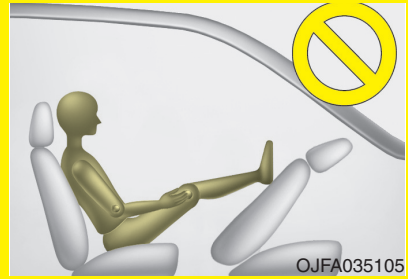

- **Do not place feet on the front passenger seatback.**

- **Never sit with hips shifted towards the front of the seat.**

(Continued)

(Continued)

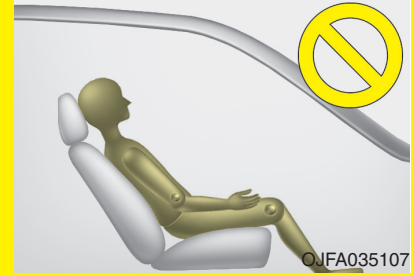

- **Never excessively recline the front passenger seatback.**

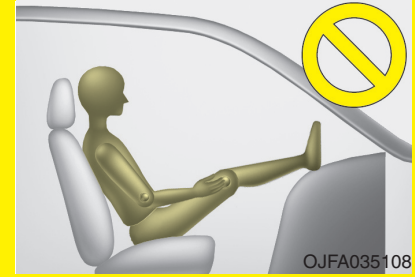

- **Never place feet on the dashboard.**

(Continued)

(Continued)

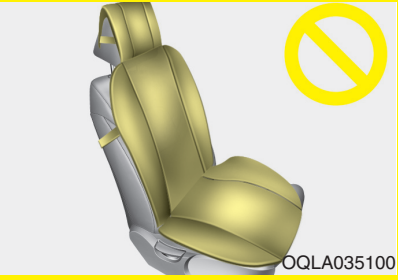

- **Do not use car seat accessories such as thick blankets and cushions which cover up the car seat surface.**

(Continued)

(Continued)

- **Never lean on the door or center console.**
- **Never sit on one side of the front passenger seat.**

(Continued)

(Continued)

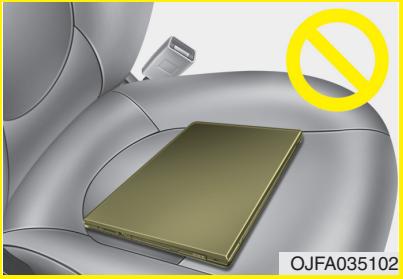

- **Do not put an electronic device (ex. Laptop computer, after market DMB, navigation, satellite audio, video game machine, MP3, AC inverter, etc.) in the front passenger seatback pocket or on the front passenger seat.**

(Continued)

(Continued)

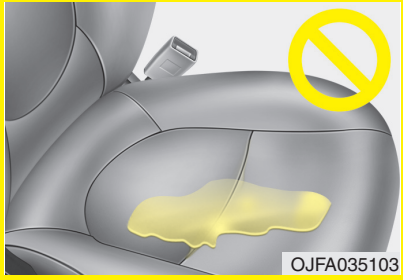

- **Wet Passenger Seat:**

  Do not spill liquid in the passenger seat. Spilled liquid on the passenger seat may cause the air bag warning light to illuminate or malfunction. If any liquid is spilled, make sure the seat has been completely dried before driving the vehicle.

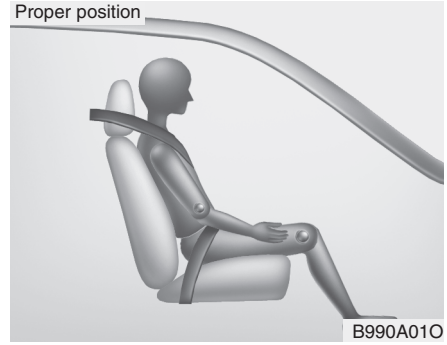

When an adult is seated in the front passenger seat, if the PASSENGER AIR BAG “OFF” indicator is on, turn the ignition switch to the LOCK position and ask the passenger to sit properly (sitting upright with the seat back in an upright position, centered on the seat cushion with their seat belt on, legs comfortably extended and their feet on the floor). Restart the engine and have the person remain in that position. This will allow the system to detect the person and to enable the passenger air bag.

If the PASSENGER AIR BAG “OFF” indicator is still on, ask the passenger to move to the rear seat.

⚠ WARNING - “AIR BAG OFF” light

Do not allow an adult passenger to ride in the front seat when the PASSENGER AIR BAG “OFF” indicator is illuminated, because the air bag will not deploy in the event of a crash. The driver must instruct the passenger to reposition himself in the seat. Failure to properly position yourself may lead to air bag deactivation resulting in air bag non-deployment in a collision. If the PASSENGER AIR BAG “OFF” indicator remains illuminated after the passenger repositions themselves properly and the car is restarted, it is recommended that passenger move to the rear seat because the passenger's front air bag will not deploy.

✻ NOTICE

The PASSENGER AIR BAG "OFF" indicator illuminates for about 4 seconds after the ignition switch is turned to the ON position or after the engine is started. If the front passenger seat is occupied, the occupant detection sensor will then classify the front passenger after several more seconds.

- Even though your vehicle is equipped with the occupant detection system, never install a child restraint system in the front passenger's seat. A deploying air bag can forcefully strike a child resulting in serious injuries or death. Any child age 13 and under should ride in the rear seat. Children too large for child restraints should use the available lap/shoulder belts. No matter what type of crash, children of all ages are safer when restrained in the rear seat.
- If the PASSENGER AIR BAG "OFF" indicator is illuminated when the front passenger's seat is occupied by an adult and he/she sits properly (sitting upright with the seatback in an upright position, centered on the seat cushion with their seat belt on, legs comfortably extended and their feet on the floor), have that person sit in the rear seat. Any child age 13 and under should ride in the rear seat. Children too large for child restraints should use the available lap/shoulder belts. No matter what type of crash, children of all ages are safer when restrained in the rear seat.

If the occupant detection system is not working properly, the SRS air bag warning light on the instrument panel will illuminate because the passenger's front air bag is connected with the occupant detection system. If there is a malfunction of the occupant detection system, the PASSENGER AIR BAG "OFF" indicator will not illuminate and the passenger's front air bag will inflate in frontal impact crashes even if there is no occupant in the front passenger's seat.

Driver's and passenger's front air bag

■ Driver's front air bag

OQL038038L

■ Passenger's front air bag

OQL038039L

Your vehicle is equipped with an Advanced Supplemental Restraint (Air Bag) System and lap/shoulder belts at both the driver and passenger seating position.

The indication of the system's presence are the letters "AIR BAG" located on the air bag pad cover on the steering wheel and the passenger's side front panel pad above the glove box.

The SRS consists of air bags installed under the pad covers in the center of the steering wheel and the passenger's side front panel above the glove box.

The purpose of the SRS is to provide the vehicle's driver and/or the front passenger with additional protection than that offered by the seat belt system alone in case of a frontal impact of sufficient severity. The SRS uses sensors to gather information about the driver's and front passenger's seat belt usage and impact severity.

The seat belt buckle sensors determine if the driver and front passenger's seat belts are fastened.

These sensors provide the ability to control the SRS deployment based on whether or not the seat belts are fastened, and how severe the impact is.

The advanced SRS offers the ability to control the air bag inflation with two levels. A first stage level is provided for moderate-severity impacts. A second stage level is provided for more severe impacts.

The passenger's front air bag is designed to help reduce the injury of children sitting close to the instrument panel in low severity collisions. However, children are safer if they are restrained in the rear seat.

According to the impact severity and seat belt usage, the SRSCM (SRS Control Module) controls the air bag inflation. Failure to properly wear seat belts can increase the risk or severity of injury in an accident.

Additionally, your vehicle is equipped with an occupant detection system in the front passenger's seat. The occupant detection system detects the presence of a passenger in the front passenger's seat and will turn off the front passenger's air bag under certain conditions. For more detail, see "Occupant detection system" in this chapter.

Modification to the seat structure can cause the air bag to deploy at a different level than should be provided.

Manufacturers are required by government regulations to provide a contact point concerning modifications to the vehicle for persons with disabilities, which modifications may affect the vehicle's advanced air bag system. That contact is Kia's toll-free Customer Experience Department at 1-877-KIA-AUTO (1-877-542-2886). However, Kia does not endorse nor will it support any changes to any part or structure of the vehicle that could affect the advanced air bag system, including the occupant detection system.

⚠ WARNING - Replacement / modifications

The front passenger seat, dashboard or door should not be replaced except by an authorized Kia dealer using original Kia parts designed for this vehicle and model. Any other such replacement or modification could adversely affect the operation of the occupant detection system and your advanced air bags.

Advanced air bags are combined with pre-tensioner seat belts to help provide enhanced occupant protection in frontal crashes.

✻ NOTICE

Air bags can only be used once – have an authorized Kia dealer replace the air bag immediately after deployment.

Front air bags are not intended to deploy in side-impact, rear-impact or rollover crashes. However, when frontal deployment threshold is satisfied at side-impact, front air bags may deploy. In addition, front air bags will not deploy in frontal crashes below the deployment threshold.

⚠ WARNING - SRS Wiring

Do not tamper with or disconnect SRS wiring or other components of the SRS system. Doing so could result in injury, due to accidental deployment of the air bags or by rendering the SRS inoperative.

⚠ WARNING - No attaching objects

No objects (such as crash pad cover, cellular phone holder, cup holder, perfume or stickers) should be placed over or near the air bag modules on the steering wheel, instrument panel, windshield glass, and the front passenger's panel above the glove box. Such objects could cause harm if the vehicle is in a crash severe enough to cause the air bags to deploy.

Do not place any objects over the air bag or between the air bag and yourself.

Side air bag

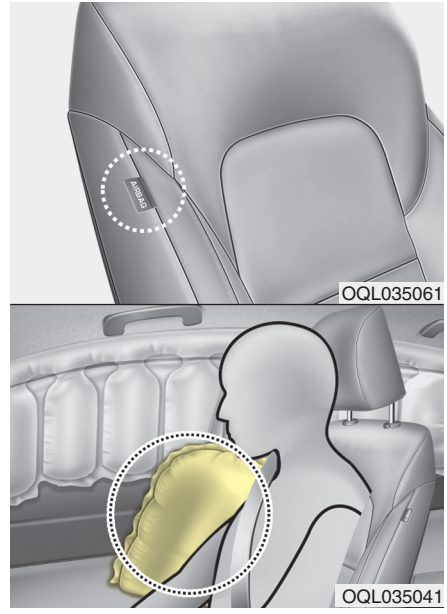

❊ The actual air bags in the vehicle may differ from the illustration.

Your vehicle is equipped with a side air bag in each front seat. The purpose of the air bag is to provide the vehicle's driver and/or the front passenger with additional protection than that offered by the seat belt alone.

- The side air bags are designed to deploy during certain side-impact collisions, depending on the crash severity impact. However, when side deployment threshold is satisfied at front-impact, side air bags may deploy.
- The side air bags may deploy on the side of the impact.
- The side and/or curtain air bags on both sides of the vehicle will deploy if a rollover or possible rollover is detected.
- The side air bags are not designed to deploy in all side impact or rollover situations.

⚠ WARNING - Unexpected deployment

Avoid impact to the side impact airbag sensor when the ignition switch is ON to prevent unexpected deployment of the side air bag.

- The side air bag is supplemental to the driver's and the passenger's seat belt systems and is not a substitute for them. Therefore your seat belts must be worn at all times while the vehicle is in operation.
- For best protection from the side air bag system and to avoid being injured by the deploying side air bag, both front seat occupants should sit in an upright position with the seat belt properly fastened. The driver's hands should be placed on the steering wheel at the 9:00 and 3:00 positions. The passenger's arms and hands should be placed on their laps.

⚠ WARNING - Deployment

Do not install any accessories including seat covers, on the side or near the side air bag as this may affect the deployment of the side air bags.

- If seat or seat cover is damaged, have the vehicle checked and repaired by an authorized Kia dealer. Inform the dealer that your vehicle is equipped with side air bags and an occupant detection system.

⚠ WARNING - Flying objects

Do not place any objects (an umbrella, bag, etc.) between the front door and the front seat. Such objects may become dangerous projectiles if the side airbag inflates.

⚠ WARNING - No attaching objects

- **Do not place any objects over the air bag or between the air bag and yourself. Also, do not attach any objects around the area the air bag inflates such as the door, side door glass, front and rear pillar.**
- **Do not place any objects between the door and the seat. They may become dangerous projectiles if the side air bag inflates.**
- **Never place or insert any object into any small opening near side airbag labels attached to the vehicle seats. When the air bag deploys, the object may affect the deployment and result in unexpected accident or bodily harm.**
- **Do not install any accessories on the side or near the side air bags.**

Curtain air bag

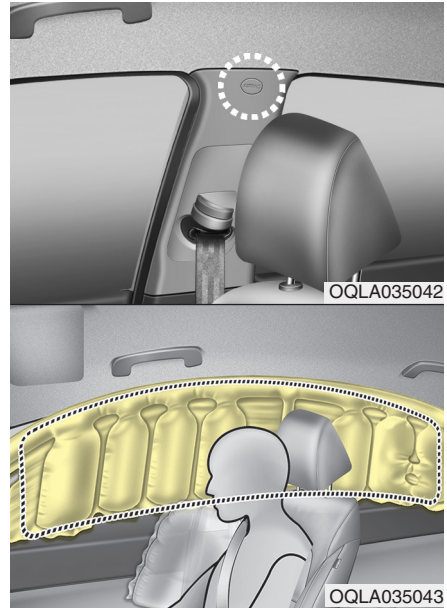

❊ The actual air bags in the vehicle may differ from the illustration.

Curtain air bags are located along both sides of the roof rails above the front and rear doors.

They are designed to help protect occupants in certain side impacts and to help prevent them from ejecting out of the vehicle as a result of a rollover, especially when the seatbelts are also in use.

- The curtain air bags are designed to deploy during certain side impact collisions, depending on the crash severity impact. However, when side deployment threshold is satisfied at front-impact, curtain air bags may deploy.
- The curtain air bags may deploy on the side of the impact.
- Also, the curtain air bags on both sides of the vehicle will deploy in certain rollover situations.
- The curtain air bags are not designed to deploy in all side impact or rollover situations.

Do not allow the passengers to lean their heads or bodies against the doors, put their arms on the doors, stretch their arms out of the window or place objects between the doors and passengers when they are seated on seats equipped with side impact and/or curtain air bags.

✻ NOTICE

Never try to open or repair any components of the side and curtain air bag system. This should only be done by an authorized Kia dealer.

⚠ WARNING - No attaching objects

- **Do not place any objects over the air bag. Also, do not attach any objects around the area the air bag inflates such as the door, side door glass, front and rear pillar, roof side rail.**
- **Do not hang hard or breakable objects on the coat hook.**

Why didn't my air bag go off in a collision? (Inflation and non-inflation conditions of the air bag)

There are many types of accidents in which the air bag would not be expected to provide additional protection.

These include rear impacts, second or third collisions in multiple impact accidents, as well as low speed impacts.

Air bag collision sensors

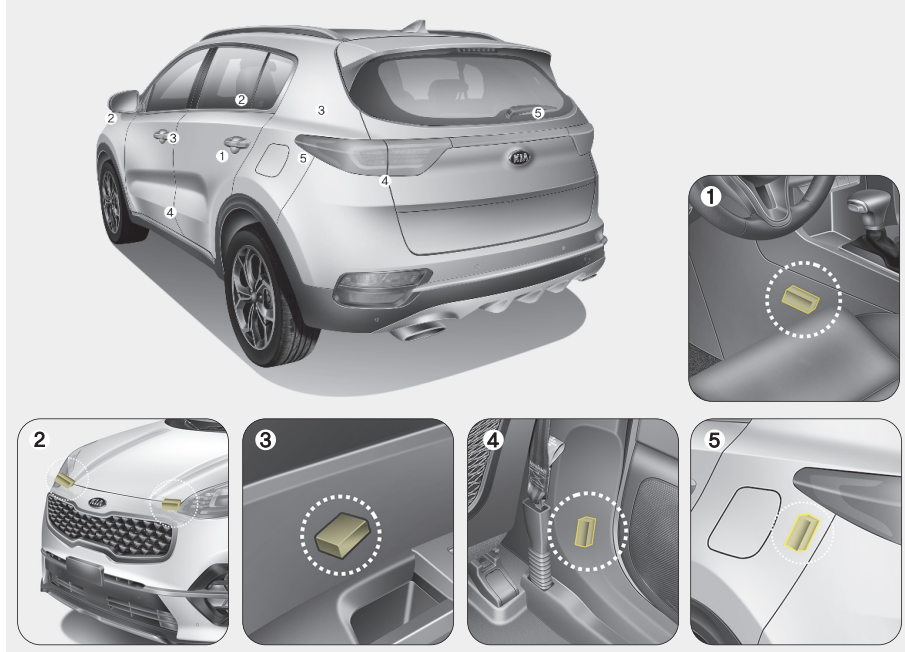

OQL038044L/OQL035045/OQL038046L/OQL035047/OQL035048/OQL038059L

(1) SRS control module/ Rollover sensor
(2) Front impact sensor
(3) Side impact sensor (Front Door)
(4) Side impact sensor (C-pillar)
(5) Side impact sensor (B-pillar)

❊ The actual air bag collision sensors in the vehicle may differ from the illustration.

⚠ WARNING - Air bag sensors

- **Do not hit or allow any objects to impact the locations where air bags or sensors are installed.**

  This may cause unexpected air bag deployment, which could result in serious bodily injury or death.
- **If the installation location or angle of the sensors is altered in any way, the air bags may deploy when they should not or they may not deploy when they should.**

  Therefore, do not try to perform maintenance on or around the air bag sensors. Have the vehicle checked and repaired by an authorized Kia dealer.

Problems may arise if the sensor installation angles are changed due to the deformation of the front bumper, front end module, body or front doors where side collision sensors are installed. Have the vehicle checked and repaired by an authorized Kia dealer.

Installing bumper guards (or side step or running board) or replacing a bumper (or front door module) with non-genuine parts may adversely affect your vehicle's collision and air bag deployment performance.

Air bag inflation conditions

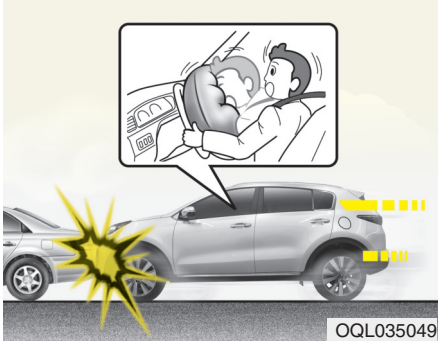

Front air bags

Front air bags are designed to inflate in a frontal collision depending on the impact of the front collision.

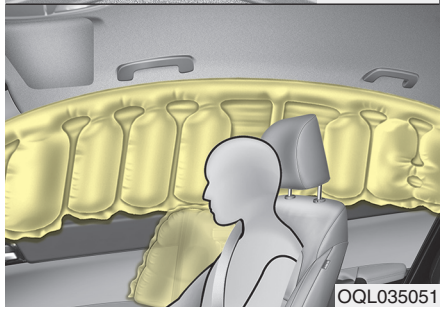

❊ The actual air bags in the vehicle may differ from the illustration.

Side and/or curtain air bags

Side and/or curtain air bags are designed to inflate when an impact is detected by side collision sensors depending on the impact resulting from a side impact collision.

Also, the side and curtain air bags are designed to inflate when a rollover is detected by a rollover sensor.

Although the front air bags (driver's and front passenger's air bags) are designed to inflate in frontal collisions, they also may inflate in other types of collisions if the front impact sensors detect a sufficient frontal force in another type of impact. Side and curtain air bags are designed to inflate in certain side impact collisions. They may inflate in other types of collisions where a side force is detected by the sensors. Side air bag and/or curtain air bags may also inflate where rollover sensors indicate the possibility of a rollover occurring (even if none actually occurs) or in other situations, including when the vehicle is tilted while being towed.

Even where side and/or curtain air bags would not provide impact protection in a rollover, however, they will deploy to prevent ejection of occupants, especially those who are restrained with seat belts.

If the vehicle chassis is impacted by bumps or objects on unimproved roads, the air bags may deploy. Drive carefully on unimproved roads or on surfaces not designed for vehicle traffic to prevent unintended air bag deployment.

Air bag non-inflation conditions

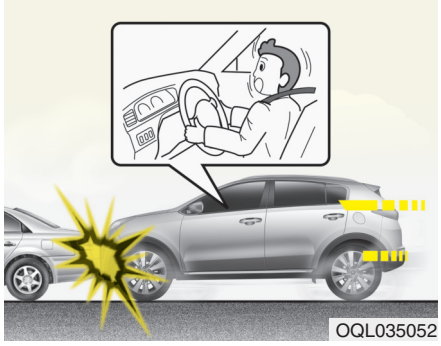

- In certain low-speed collisions the air bags may not deploy. The air bags are designed not to deploy in such cases because they may not provide benefits beyond the protection of the seat belts in such collisions.

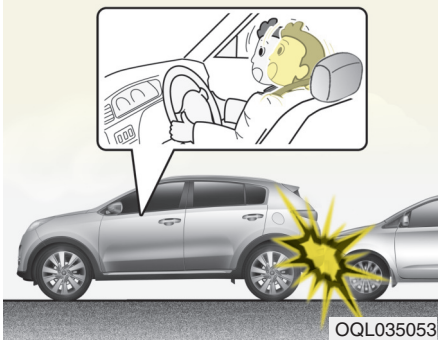

- Air bags are not designed to inflate in rear collisions, because occupants are moved backward by the force of the impact. In this case, inflated air bags would not be able to provide any additional benefit.

- Front air bags may not inflate in side impact collisions, because occupants move to the direction of the collision, and thus in side impacts, frontal air bag deployment would not provide additional occupant protection.

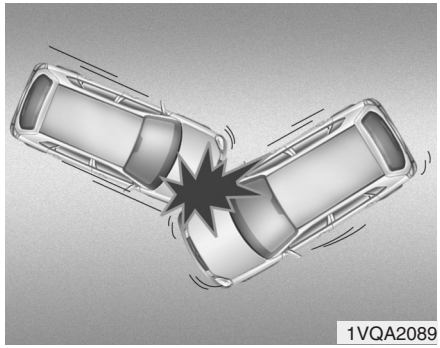
1VQA2089

- In an angled collision, the force of impact may direct the occupants in a direction where the air bags would not be able to provide any additional benefit, and thus the sensors may not deploy any air bags.

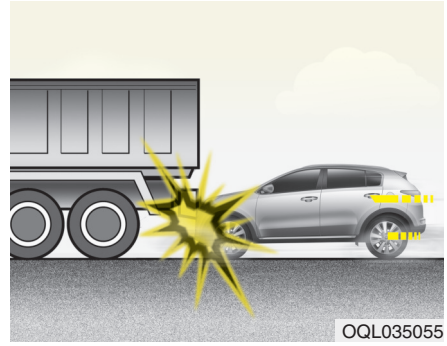
OQL035055

- Just before impact, drivers often brake heavily. Such heavy braking lowers the front portion of the vehicle causing it to “ride” under a vehicle with a higher ground clearance. Air bags may not inflate in this "under-ride" situation because deceleration forces that are detected by sensors may be significantly reduced by such “under-ride” collisions.

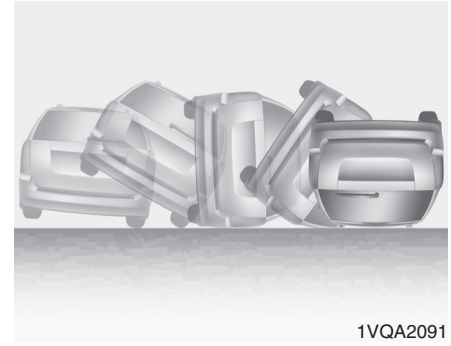
1VQA2091

- Front air bags may not inflate in all rollover accidents where the SRSCM indicates that the front air bag deployment would not provide additional occupant protection.

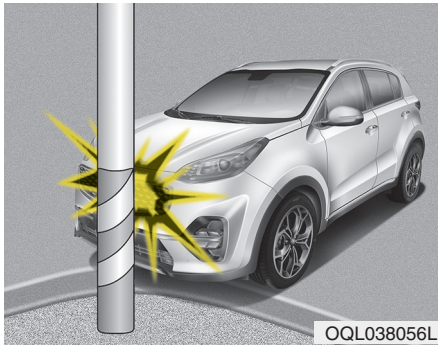

- Air bags may not inflate if the vehicle collides with objects such as utility poles or trees, where the point of impact is concentrated to one area and the full force of the impact is not delivered to the sensors.

SRS Care

The SRS is virtually maintenance-free and so there are no parts you can safely service by yourself. If the SRS air bag warning light does not illuminate, or continuously remains on, have your vehicle immediately inspected by an authorized Kia dealer.

Any work on the SRS system, such as removing, installing, repairing, or any work on the steering wheel, the front passenger's panel, front seats and roof rails must be performed by an authorized Kia dealer. Improper handling of the SRS system may result in serious bodily injury.

For cleaning the air bag pad covers, use only a soft, dry cloth or one which has been moistened with plain water. Solvents or cleaners could adversely affect the air bag covers and proper deployment of the system.

If components of the air bag system must be discarded, or if the vehicle must be scrapped, certain safety precautions must be observed. An authorized Kia dealer knows these precautions and can give you the necessary information. Failure to follow these precautions and procedures could increase the risk of bodily injury.

⚠ WARNING - Tampering with SRS

Do not tamper with or disconnect SRS wiring, or other components of the SRS system. Doing so could result in the accidental inflation of the air bags or by rendering the SRS inoperative.

⚠ WARNING - Towing Vehicle

Always have the ignition off when your vehicle is being towed. The side air bags may inflate if the vehicle is tilted such as when being towed because of the rollover sensors in the vehicle.

Adding equipment to or modifying your air bag-equipped vehicle

If you modify your vehicle by changing your vehicle's frame, bumper system, front end or side sheet metal or ride height, this may affect the operation of your vehicle's air bag system.

Air bag warning label

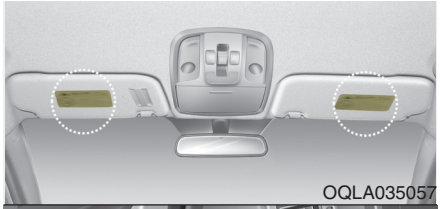

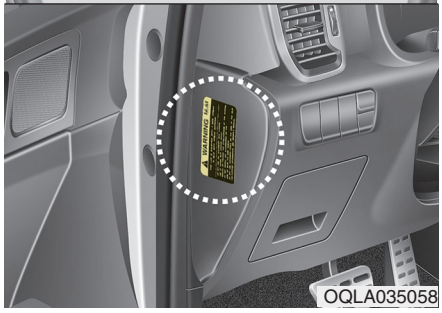

Air bag warning labels, some required by the Canada Motor Vehicle Safety Standards (CMVSS), are attached to the sunvisor to alert the driver and passengers of potential risks of the air bag system.

Features of your vehicle

Folding key 4-5
- Record your key number 4-5
- Key operations 4-5
- Transmitter precautions 4-7
- Battery replacement 4-8
- Immobilizer system 4-9

Smart key 4-12
- Record your key number 4-12
- Smart key function 4-12
- Mechanical key 4-15
- Loss of the smart key 4-15
- Smart key precautions 4-15
- Battery replacement 4-16
- Smart key immobilizer system 4-17

Theft-alarm system 4-20
- Armed stage 4-20
- Theft-alarm stage 4-21
- Disarmed stage 4-21

Door locks 4-23
- Operating door locks from outside the vehicle 4-23
- Operating door locks from inside the vehicle 4-24
- Impact sensing door unlock system 4-26
- Child-protector rear door lock 4-26

Liftgate (for manual liftgate) 4-28
- Opening the liftgate 4-28
- Closing the liftgate 4-28
- Emergency liftgate safety release 4-29

Power liftgate 4-31
- Opening the liftgate 4-32
- Closing the liftgate 4-33
- Smart Power Liftgate 4-37

Windows 4-41
- Power windows 4-42

Hood 4-46
- Opening the hood 4-46
- Closing the hood 4-47

Fuel filler lid 4-48
- Opening the fuel filler lid 4-48
- Closing the fuel filler lid 4-49

Panoramic sunroof 4-52
- Sunroof open warning 4-53
- Sunshade 4-53
- Sliding the sunroof 4-54
- Tilting the sunroof 4-56
- Closing the sunroof 4-56
- Resetting the sunroof 4-56

Steering wheel 4-58
• Electronic Power Steering (EPS) 4-58
• Tilt and telescopic steering 4-59
• Heated steering wheel 4-60
• Horn 4-61
Mirrors 4-62
• Inside rearview mirror 4-62
• Outside rearview mirror 4-76
Instrument cluster 4-80
• Instrument cluster control 4-81
• LCD display control 4-81
• Gauges 4-82
• Transmission shift indicator 4-85
LCD display 4-86
• LCD modes 4-86
• User settings mode 4-89
Trip modes (Trip computer) 4-94
• Trip modes 4-94
• Fuel economy 4-94
• Warning messages 4-97
Warning and indicator lights 4-104
• Warning lights 4-104
• Indicator lights 4-112
Rear View Monitor (RVM) 4-117
Reverse Parking Distance Warning (PDW) 4-118
• Operation of Reverse Parking Distance Warning . . . 4-118
• Non-operational conditions of Reverse Parking Distance Warning 4-119
• Reverse Parking Distance Warning precautions . . 4-120
• Self-diagnosis 4-121
Forward/Reverse Parking Distance Warning (PDW) 4-122
• Operation of Parking Distance Warning 4-122
• Non-operational conditions of Parking Distance Warning 4-124
• Self-diagnosis 4-126
Lighting 4-127
• Battery saver function 4-127
• Daytime running light 4-127
• Lighting control 4-127
• High beam operation 4-129
• High beam assist (HBA) 4-130
• Turn signals and lane change signals 4-132
• Front fog light 4-133
• Check headlight 4-133
• Dynamic Bending Light (DBL) 4-134

Wipers and washers 4-135
• Windshield wipers 4-135
• Front windshield washers 4-136
• Rear window wiper and washer switch 4-137
Interior lights 4-139
• Automatic turn off function 4-139
• Room lamp 4-139
• Map lamp 4-140
• Liftgate room lamp 4-141
• Glove box lamp 4-141
• Vanity mirror lamp 4-141
Welcome system 4-142
• Headlight (Headlamp) escort function 4-142
• Interior light 4-142
• Pocket lamp 4-142
Defroster 4-143
• Rear window defroster 4-143
Manual climate control system 4-144
• Heating and air conditioning 4-145
• System operation 4-150
• Climate control air filter 4-152
• Checking the amount of air conditioner refrigerant and compressor lubricant 4-153
Automatic climate control system 4-154
• Automatic heating and air conditioning 4-155
• Manual heating and air conditioning 4-156
• System operation 4-162
• Climate control air filter 4-164
• Checking the amount of air conditioner refrigerant and compressor lubricant 4-165
Windshield defrosting and defogging 4-166
• Manual climate control system 4-166
• Automatic climate control system 4-167
• Defogging logic 4-168
Clean air 4-170
Storage compartments 4-171
• Center console storage 4-171
• Glove box 4-171
• Sunglass holder 4-172
• Luggage box 4-172
• Two types of luggage board levels 4-173
Interior features 4-174
• Cup holder 4-174
• Bottle holder 4-174
• Seat warmer 4-175
• Air ventilation seat 4-176
• Sunvisor 4-176
• Power outlet 4-177

• USB charger 4-178
• Wireless smart phone charging system 4-179
• Coat hook 4-182
• Floor mat anchor (s) 4-183
• Luggage net holder 4-183
• Cargo security screen 4-184
Exterior features 4-186
• Roof rack 4-186
Audio system 4-188
• Antenna 4-188
• Steering wheel audio controls 4-188
• USB port 4-190
• How vehicle radio works 4-190
Declaration of Conformity 4-193
• IC 4-193

FOLDING KEY

Record your key number

The key code number is stamped on the key code tag attached to the key set. Should you lose your keys, this number will enable an authorized Kia dealer to duplicate the keys easily. Remove the key code tag and store it in a safe place. Also, record the key code number and keep it in a safe place, but not in the vehicle.

Key operations

OBD048028L

- Used to start the engine.
- Used to lock and unlock the doors.
- To unfold the key, press the release button then the key will unfold automatically. To fold the key, fold the key manually while pressing the release button.

⚠ CAUTION

Do not fold the key without pressing the release button. This may damage the key.

⚠ WARNING - Aftermarket key

Use only Kia original parts for the ignition key in your vehicle. If an aftermarket key is used, the ignition switch may not return to ON after START. If this happens, the starter will continue to operate causing damage to the starter motor and possible fire due to excessive current in the wiring.

⚠ WARNING - Ignition key

Never leave the keys in your vehicle with unsupervised children. Leaving children unattended in a vehicle with a manual ignition key or a smart key is dangerous. Children copy adults and they could place the key in the ignition switch or press the start button. The key would enable children to operate power windows or other controls, or even make the vehicle move, which could result in serious bodily injury or death.

Door Lock (1)

OBD048030

1. Close all doors, engine hood and liftgate.
2. Press the lock button(1).
3. All doors and liftgate will lock. The hazard warning lights will blink once.
4. If the lock button is pressed once more within 4 seconds, the hazard warning lights will blink.
5. Make sure that doors are locked by checking the door lock button inside or pulling the outside door handle.

Door Unlock (2)

1. Press the unlock button(2).
2. The driver's door will unlock. The hazard warning lights will blink two times.
3. Press the unlock button(2) twice within 4 seconds and all doors and liftgate will unlock. The hazard warning lights will blink two times.

✻ NOTICE

You can activate or deactivate the Two Turn Unlock function.
Refer to "User settings" in this chapter.

Liftgate unlock (3)

The liftgate is unlocked if the button is pressed for more than 1 second.

Also, once the liftgate is opened and then closed, the liftgate will be locked automatically.

- For Power Liftgate Only:

The Power Liftgate will open if the button is pressed for more than 1 second. Also, once the liftgate is opened and then closed, the liftgate will be locked again automatically.

❊For detailed information refer to the "Power liftgate" in this chapter.

Panic (4)

The horn sounds and hazard warning lights flash for about 27 seconds if this button is pressed for more than 0.5 second. To stop the horn and lights, press any button on the transmitter.

Transmitter precautions

- The transmitter will not work if any of following occur:
  - The ignition key is in the ignition switch.
  - You exceed the operating distance limit (about 10 m [30 feet]).
  - The battery in the transmitter is weak.
  - Other vehicles or objects may be blocking the signal.
  - The weather is extremely cold.
  - The transmitter is close to a radio transmitter such as a radio substation or an airport which can interfere with normal operation of the transmitter.

- When the transmitter does not work correctly, open and close the door with the ignition key. If you have a problem with the transmitter, contact an authorized Kia dealer.
- If the transmitter is in close proximity to your mobile phone, the signal could be blocked by your mobile phones normal operational signals. This is especially important when the phone is active such as making and receiving calls, text messaging, and/or sending/receiving emails. Avoid placing the transmitter and your mobile phone in the same pants or jacket pocket and always try to maintain an adequate distance between the two devices.

⚠ **CAUTION - Transmitter**

Keep the transmitter away from water or any liquid as it can become damaged and not function properly.

✻ NOTICE

If the keyless entry system is inoperative due to exposure to water or liquids, it will not be covered by your manufacturer's vehicle warranty.

Battery replacement

OBD048032

The transmitter uses a 3 volt lithium battery which will normally last for several years. When replacement is necessary, use the following procedure.

1. Insert a slim tool into the slot and gently pry open the transmitter center cover.
2. Replace the battery with a new battery (CR2032). When replacing the battery, make sure the battery is positioned correctly.
3. Install the battery in the reverse order of removal.

For replacement transmitters, see an authorized Kia dealer for transmitter reprogramming.

- The transmitter is designed to give you years of trouble-free use, however it can malfunction if exposed to moisture or static electricity. If you are unsure how to use your transmitter or replace the battery, contact an authorized Kia dealer.
- Using the wrong battery can cause the transmitter to malfunction. Be sure to use the correct battery.
- To avoid damaging the transmitter, don't drop it, get it wet, or expose it to heat or sunlight.
- An inappropriately disposed battery can be harmful to the environment and may cause harm to human health. Dispose the battery according to your local law(s) or regulation.

⚠ CAUTION - Transmitter damage

Do not drop, wet or expose the keyless entry system transmitter to heat or sunlight.

⚠ IC WARNING

This device complies with Industry Canada licence-exempt RSS standard(s).

Operation is subject to the following two conditions: (1) this device may not cause interference, and (2) this device must accept any interference, including interference that may cause undesired operation of the device.

Immobilizer system

Your vehicle is equipped with an electronic engine immobilizer system to reduce the risk of unauthorized vehicle use.

Your immobilizer system is comprised of a small transponder in the ignition key and electronic devices inside the vehicle.

With the immobilizer system, whenever you insert your ignition key into the ignition switch and turn it to ON, verifies if the ignition key is valid.

If the key is determined to be valid, the engine will start.

If the key is determined to be invalid, the engine will not start.

To activate the immobilizer system:

Turn the ignition key to the OFF position. The immobilizer system activates automatically. Without a valid ignition key for your vehicle, the engine will not start.

To deactivate the immobilizer system:

Insert the ignition key into the key cylinder and turn it to the ON position.

In order to prevent theft of your vehicle, do not leave spare keys anywhere in your vehicle. Your Immobilizer password is a customer unique password and should be kept confidential. Do not leave this number anywhere in your vehicle.

✻ NOTICE

When starting the engine, do not use the key with other immobilizer keys around. Otherwise the engine may not start or may stop soon after it starts. Keep each key separate in order to avoid a starting malfunction.

Do not put metal accessories near the ignition switch.

Metal accessories may interrupt the transponder signal and may prevent the engine from being started.

✻ NOTICE

If you need additional keys or lose your keys, contact an authorized Kia dealer.

⚠ CAUTION - Immobilizer damage

Do not expose your immobilizer system to moisture, static electricity or rough handling. This may damage your immobilizer.

⚠ CAUTION - Immobilizer alterations

Do not change, alter or adjust the immobilizer system because it could cause the immobilizer system to malfunction.

This device complies with Industry Canada licence-exempt RSS standard(s).

Operation is subject to the following two conditions:

(1) This device may not cause interference, and

(2) This device must accept any interference, including interference that may cause undesired operation of the device.

✻ NOTICE

Changes or modifications not expressly approved by the party responsible for compliance could void the user's authority to operate the equipment. If the keyless entry system is inoperative due to changes or modifications not approved by the party responsible for compliance, it will not be covered by your manufacturer's vehicle warranty.

Limp home (override) procedure

When you turn the ignition switch to the ON position, if the immobilizer indicator (🚗) goes off after blinking 5 times, your transponder equipped in the ignition key is out of order. You cannot start the engine without the limp home procedure. To start the engine, you have to input your password by using the ignition switch. Your password is only available from an authorized Kia dealership. Contact an authorized dealer for more information.

The following procedure is how to input your password of "2345" as an example.

1. Turn the ignition switch to the ON position. The immobilizer indicator (🚗) will blink 5 times and go off indicating the beginning of the limp home procedure.
2. Turn the ignition switch to the ACC position.
3. To enter the first digit (in this example "2"), turn the ignition switch to the ON and ACC position twice. Perform the same procedure for the next digits between 3 seconds and 10 seconds (for example, for "3", turn the ignition ON and ACC 3 times).
4. If all of the digits have been input successfully, you have to start the engine within 30 seconds. If you attempt to start the engine after 30 seconds, the engine will not start and you will have to input your password again.

After performing the limp home procedure, you have to see an authorized Kia dealer immediately to inspect and repair your ignition key or immobilizer system.

SMART KEY (IF EQUIPPED)

Record your key number

The key code number is stamped on the bar code tag attached to the key set. Should you lose your keys, this number will enable an authorized Kia dealer to duplicate the keys easily. Remove the bar code tag and store it in a safe place. Also, record the code number and keep it in a safe and handy place, but not in the vehicle.

⚠ WARNING - Smart key

Never leave the keys in your vehicle with unsupervised children. Leaving children unattended in a vehicle with a manual a smart key is dangerous. Children copy adults and they could press the start button. The key would enable children to operate power windows or other controls, or even make the vehicle move, which could result in serious bodily injury or death.

Smart key function

With a smart key, you can lock or unlock a door (and liftgate) and start the engine.

Refer to the following for more details.

Locking (1)

Pressing the button of the front outside door handles with all doors (and liftgate) closed and any door unlocked, locks all the doors (and liftgate).

The hazard warning lights will blink once to indicate that all doors (and liftgate) are locked. The button will only operate when the smart key is within 0.7 ~ 1 m (28 ~ 40 in) from the outside door handle. If you want to make sure that a door has locked or not, you should check the door lock button inside the vehicle or pull the outside door handle.

Even though you press the button, the doors will not lock and an audible chime will sound if any of the following occurs:

- The smart key is in the vehicle.
- The ENGINE START/STOP button is in the ACC or ON position.
- Any door except the liftgate is opened.

Unlocking (2)

Pressing the button of the front outside door handles with all doors (and liftgate) closed and locked, unlocks all the doors (and liftgate). The hazard warning lights will blink twice to indicate that all doors (and liftgate) are unlocked. The button will only operate when the smart key is within 0.7 ~ 1 m (28 ~ 40 in) from the outside door handle.

When Two Press Unlock function is activated,

- If you press the Door Unlock button(2) on the smart key, driver’s door will unlock.
- If you press the Door Unlock button(2) on the smart key within four seconds again, then all the doors will unlock.
- If you press the driver's outside door handle button, driver’s door will unlock.
- If you press the driver's outside door handle button within four seconds again, then all the doors will unlock.

✻ NOTICE

You can active or deactivate the Two Press Unlock function from the User Settings mode in the LCD display. Refer to "User Settings" in this chapter.

Liftgate unlocking (3)

If you are within 0.7 ~ 1 m (28 ~ 40 in) from the outside liftgate handle, with your smart key in possession, the liftgate will unlock and open when you press the liftgate handle switch.

The hazard warning lights will blink twice to indicate that the liftgate is unlocked.

Also, once the liftgate is opened and then closed, the liftgate will lock automatically.

Panic (4)

1. Press the panic button (4) for more than 1 second.
2. The horn sounds and hazard warning light flash for about 27 seconds.

✻ NOTICE

To stop the horn and lights, press any button on the smart key.

Engine start

You can start the engine without inserting the key. For detailed information refer to the "ENGINE START/STOP button" in chapter 5.

Mechanical key

OBD048029

To remove the mechanical key, press and hold the release button (1) and remove the mechanical key (2).

To reinstall the mechanical key, put the key into the hole and push it until a click sound is heard.

Loss of the smart key

A maximum of 2 smart keys can be registered to a single vehicle.

If you happen to lose your smart key, you will not be able to start the engine. You should immediately take the vehicle and remaining key to your authorized Kia dealer (tow the vehicle, if necessary) to protect it from potential theft.

Smart key precautions

- The smart key will not work if any of the following occur:
  - The smart key is close to a radio transmitter such as a radio station or an airport which can interfere with normal operation of the smart key.
  - The smart key is near a mobile two way radio system or a cellular phone.
  - Another vehicle's smart key is being operated close to your vehicle.
- When the smart key does not work correctly, open and close the door with the mechanical key and contact an authorized Kia dealer.

- If the smart key is in close proximity to your cell phone or smart phone, the signal from the smart key could be blocked by normal operation of your cell phone or smart phone. This is especially important when the phone is active such as making a call, receiving calls, text messaging, and/or sending/receiving emails. Avoid placing the smart key and your cell phone or smart phone in the same pants or jacket pocket and maintain adequate distance between the two devices.

⚠ CAUTION - Transmitter

Keep the transmitter away from water or any liquid, as it can become damaged and not function properly if wet.

✻ NOTICE

If the keyless entry system is inoperative due to exposure to water or liquids, it will not be covered by your manufacturer's vehicle warranty.

Battery replacement

OBD048032

A smart key battery should last for several years, but if the smart key is not working properly, try replacing the battery with a new one. If you are unsure how to use your smart key or replace the battery, contact an authorized Kia dealer.

1. Remove the mechanical key.
2. Pry open the rear cover.
3. Replace the battery with a new battery (CR2032). When replacing the battery, make sure the battery is in the correct position.
4. Install the battery in the reverse order of removal.

- The smart key is designed to give you years of trouble-free use, however it can malfunction if exposed to moisture or static electricity. If you are unsure how to use or replace the battery, contact an authorized Kia dealer.
- Using the wrong battery can cause the smart key to malfunction. Be sure to use the correct battery.
- To avoid damaging the smart key, don't drop it, get it wet, or expose it to heat or sunlight.
- 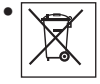 An inappropriately disposed battery can be harmful to the environment and human health. Dispose the battery according to your local law(s) or regulations.

⚠ **CAUTION - Smart key damage**

Do not drop, get wet or expose the smart key to heat or sunlight, or it will be damaged.

Smart key immobilizer system

Your vehicle is equipped with an electronic engine immobilizer system to reduce the risk of unauthorized vehicle use.

Your immobilizer system is comprised of a small transponder in the smart key and electronic devices inside the vehicle.

With the immobilizer system, whenever you turn the ENGINE START/STOP button to the ON position by pressing the button while carrying the smart key, it verifies if the smart key is valid. If the key is determined to be valid, the engine will start.

If the key is determined to be invalid, the engine will not start.

✻ NOTICE

Do not put metal accessories near the ignition switch.
Metal accessories may interrupt the transponder signal and may prevent the engine from being started.

To deactivate the immobilizer system:

Turn the ENGINE START/STOP button to the ON position by pressing the button while carrying the smart key.

In order to prevent theft of your vehicle, do not leave spare keys anywhere in your vehicle.

To activate the immobilizer system:

Turn the ENGINE START/STOP button to the OFF position. The immobilizer system activates automatically. Without a valid smart key for your vehicle, the engine will not start.

✻ NOTICE

When starting the engine, do not use the key with other immobilizer keys around. Otherwise the engine may not start or may stop soon after it starts. Keep each key separate in order to avoid a starting malfunction.

✻ NOTICE

If you need additional keys or lose your keys, contact an authorized Kia dealer.

⚠ CAUTION - Immobilizer damage

Do not expose your immobilizer system to moisture, static electricity or rough handling. This may damage your immobilizer.

✻ NOTICE - Immobilizer alterations

Do not change, alter or adjust the immobilizer system because it could cause the immobilizer system to malfunction.

This device complies with Industry Canada licence-exempt RSS standard(s).

Operation is subject to the following two conditions:

(1) This device may not cause interference, and

(2) This device must accept any interference, including interference that may cause undesired operation of the device.

✻ NOTICE

Changes or modifications not expressly approved by the party responsible for compliance could void the user's authority to operate the equipment. If the keyless entry system is inoperative due to changes or modifications not expressly approved by the party responsible for compliance, it will not be covered by your manufacturer's vehicle warranty.

⚠ CAUTION - Immobilizer damage

Do not expose your immobilizer system to moisture, static electricity or rough handling. This may damage your immobilizer.

⚠ CAUTION - Immobilizer alterations

Do not change, alter or adjust the immobilizer system because it could cause the immobilizer system to malfunction.

THEFT-ALARM SYSTEM

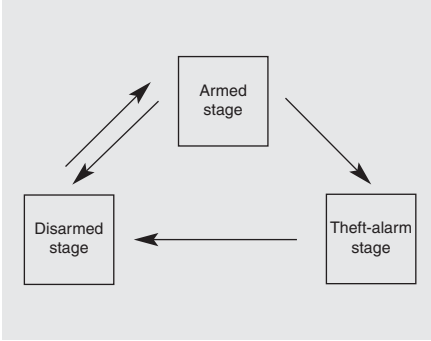

This system is designed to provide protection from unauthorized entry into the vehicle. This system is operated in three stages: the first is the "Armed" stage, the second is the "Theft-alarm" stage, and the third is the "Disarmed" stage. If triggered, the system provides an audible alarm with blinking of the hazard warning lights.

Armed stage

Park the vehicle and stop the engine. Arm the system as described below.

1. Remove the ignition key from the ignition switch and exit the vehicle.
2. Make sure that all doors (and liftgate) and engine hood are closed and latched.
3. Lock the doors using the transmitter of the keyless entry system (or smart key) or ignition key.

After completion of the steps above, the hazard warning lights will blink (for smart key, the chime also sounds) once to indicate that the system is armed.

If any door (or liftgate) or engine hood remains open, the hazard warning lights and the chime will not operate and the theft-alarm will not arm. If all doors and liftgate and engine hood are closed after the lock button is pressed, the hazard warning lights blink once.

The system can also be armed by locking the doors with the key from the front doors; however, the hazard warning lights will not blink using this method.

✻ NOTICE

The theft-alarm system can be deactivated by an authorized Kia dealer. If you want this feature, consult an authorized Kia dealer.

Do not arm the system until all passengers have left the vehicle. If the system is armed while a passenger(s) remains in the vehicle, the alarm may be activated when the remaining passenger(s) leave the vehicle. If any door (or liftgate) or engine hood is opened within 30 seconds after the system enters the armed stage, the system is disarmed to prevent an unnecessary alarm.

Theft-alarm stage

The alarm will be activated if any of the following occurs while the system is armed.

- A front or rear door is opened without using the ignition key or transmitter (or smart key).
- The liftgate is opened without using the transmitter (or smart key).
- The engine hood is opened.

The horn will sound and the hazard warning lights will blink continuously for approximately 27 seconds, and repeat the horn 3 times unless the system is disarmed. To turn off the system, unlock the doors with the ignition key or transmitter (or smart key).

Disarmed stage

The system will be disarmed when

- The doors (and liftgate) are unlocked with the transmitter (or smart key) or the ignition key.

After depressing the unlock button, the hazard warning lights will blink and the chime will sound twice (in smart key) to indicate that the system is disarmed.

After depressing the unlock button, if any door (or liftgate) is not opened within 30 seconds, the system will be rearmed.

✻ NOTICE

- Avoid trying to start the engine while the alarm is activated. The vehicle starting motor is disabled during the theft-alarm stage.
  - If the system is not disarmed with the transmitter, insert the key into the ignition switch, turn the ignition switch to the ON position and wait for 30 seconds. Then the system will be disarmed.
  - If the system is not disarmed with the smart key, press the engine start/stop button with smart key. The side with the lock button should contact the engine start/stop button directly.
- If you lose your keys, consult your authorized Kia dealer.

⚠ CAUTION - Adjusting alarm system

Do not change, alter or adjust the theft-alarm system because it could cause the theft-alarm system to malfunction and should only be serviced by an authorized Kia dealer.

✻ NOTICE

Malfunctions caused by improper alterations, adjustments or modifications to the theft-alarm system are not covered by your vehicle manufacturer warranty.

DOOR LOCKS

Operating door locks from outside the vehicle

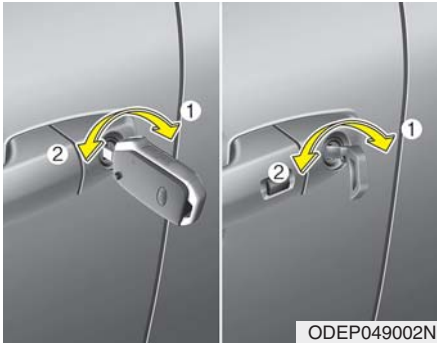

ODEP049002N

- Turn the key clockwise (1) to lock and counterclockwise (2) to unlock.
- If you lock the driver's door with a key, if you lock/unlock the driver's door with a key, only the driver's door will lock/unlock.
- Doors can also be locked and unlocked with the transmitter (or smart key).
- Once the doors are unlocked, they may be opened by pulling the door handle.
- When closing the door, push the door by hand. Make sure the doors are closed securely.

✻ NOTICE

- **In cold and wet climates, door lock and door mechanisms may not work properly due to freezing conditions.**
- **If the door is locked/unlocked multiple times in rapid succession with either the vehicle key or door lock switch, the system may stop operating temporarily in order to protect the circuit and prevent damage to system components.**

⚠ WARNING

- **Securely close your door before you begin driving. Failure to fully close your door may cause it to open during vehicle operation.**
- **Keep your body out of the way of the closing door to prevent injuries.**

⚠ CAUTION

Do not unnecessarily open and close the door repeatedly or with excessive force. Such action can damage the vehicle door.

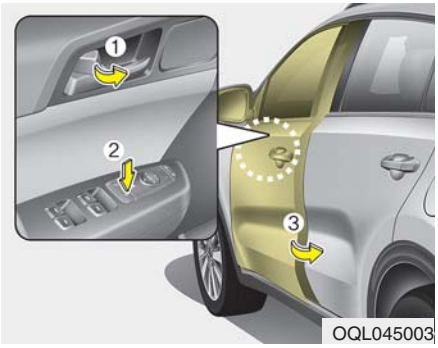

- To lock a door without the key, push the inside door lock button (1) or central door lock switch (2) to the “Lock” position when the ignition switch is in the OFF position and close the door (3).
- If you lock the door with the central door lock switch (2), all vehicle doors will lock automatically.

✻ NOTICE

Always remove the ignition key, engage the parking brake, close all windows, and lock all doors when leaving your vehicle unattended.

Operating door locks from inside the vehicle

With the door lock button

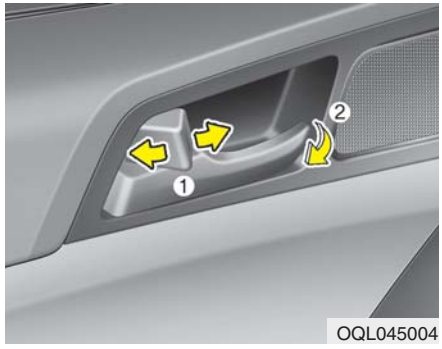

- To unlock a door, push the door lock button (1) to the “Unlock” position. The red mark on the button will be visible.
- To lock a door, push the door lock button (1) to the “Lock” position. If the door is locked properly, the red mark on the door lock button will not be visible.
- To open a door, pull the door handle (2) outward.
- If the inner door handle of the driver’s (or front passenger’s) door is pulled when the door lock button is in the lock position, the button will unlock and the door will open. (if equipped)
- Front doors cannot be locked if the ignition key is in the ignition switch and any front door is opened.
- Doors cannot be locked if the smart key is in the vehicle and an door is open.

If a power door lock ever fails to function while you are in the vehicle, try one or more of the following techniques to exit:

- Operate the door unlock feature repeatedly (both electronic and manual) while simultaneously pulling on the door handle.
- Operate the other door locks and handles, front and rear.
- Lower a front window and use the key to unlock the door from outside.

⚠ WARNING

Do not pull the inner door handle of driver's(or passenger's) door while the vehicle is moving.

With central door lock switch

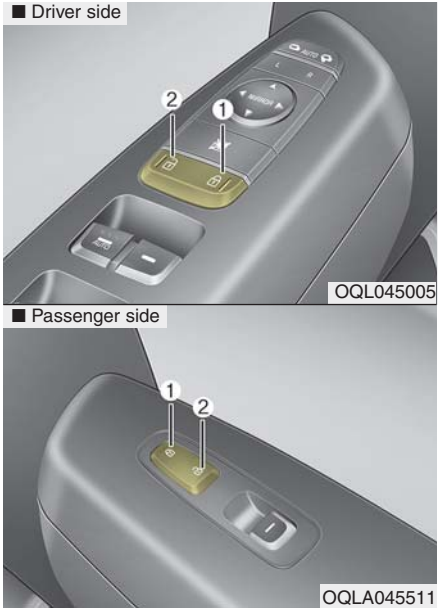

Operate by pressing the central door lock switch.

- When pressing the right portion(1) for driver side or the upper portion(1) for passenger side of the switch, all vehicle doors will lock.
- When pressing the left portion(2) for driver side or the lower portion(2) for passenger side of the switch, all vehicle doors will unlock.
- If the key is in the ignition switch (or if the smart key is in the vehicle) and any door is opened, the doors will not lock even though the right portion(1) for driver side or upper portion(1) for passenger side of the central door lock switch is pressed.

⚠ WARNING - Doors

- **The doors should always be fully closed and locked while the vehicle is in motion to prevent accidental opening of the door.**
- **Be careful when opening doors and watch for vehicles, motorcycles, bicycles or pedestrians approaching the vehicle in the path of the door. Opening a door when something is approaching can cause damage or injury.**

⚠ WARNING - Unattended children/animals

Never leave children or animals unattended in your vehicle. An enclosed vehicle can become extremely hot, causing death or severe injury to unattended children or animals who cannot escape the vehicle.

Impact sensing door unlock system

In the event of air bag deployment resulting from a vehicle impact, all doors will automatically unlock.

Speed sensing door lock system

All doors will automatically lock after the vehicle speed exceeds 15 km/h (10 mph).

✻ NOTICE

You can select some auto door lock/unlock features in "User Settings".

❋ For more information, refer to "User Settings" in this chapter.

Child-protector rear door lock

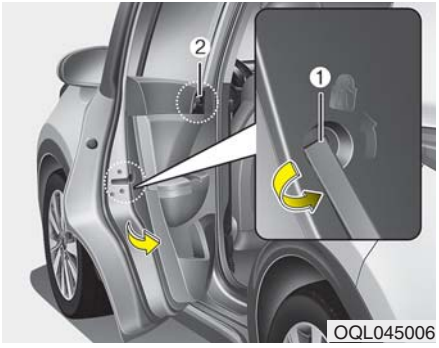

The child safety lock is provided to help prevent children from accidentally opening the rear doors from inside the vehicle. The rear door safety locks should be used whenever children are in the vehicle.

1. Open the rear door.
2. Turn the child safety lock (1) located on the rear edge of the door to the lock ( ) position. When the child safety lock is in the lock position, the rear door will not open even when the inner door handle is pulled.

3. Close the rear door.

To open the rear door, pull the outside door handle (2).

Even though the doors may be unlocked, the rear door will not open by pulling the inner door handle until the rear door child safety lock is unlocked.

⚠ WARNING - Rear door locks

Use the rear door safety locks whenever children are in the vehicle. If a child accidently opens the rear doors while the vehicle is moving, they may fall out.

LIFTGATE (for manual liftgate)

Opening the liftgate

OQL048075L

- The liftgate is locked or unlocked when all doors are locked or unlocked with the key, transmitter (or smart key) or central door lock switch.
- If unlocked, the liftgate can be opened by pressing the handle switch and then pulling the handle up.
- Only the liftgate is unlocked if the liftgate unlock button on the smart key is pressed (if equipped). Once the liftgate is opened and then closed, the liftgate is locked automatically.

⚠ WARNING

The liftgate swings upward. Make sure no objects or people are near the rear of the vehicle when opening the liftgate.

✻ NOTICE

In cold and wet climates, door lock and door mechanisms may not work properly due to freezing conditions.

⚠ CAUTION - Liftgate lift

Make certain that you close the liftgate before driving your vehicle. Possible damage may occur to the liftgate lift cylinders and attached hardware if the liftgate is not closed prior to driving.

Closing the liftgate

OQL048076L

To close the liftgate, lower and push down the liftgate firmly. Make sure that the liftgate is securely latched.

⚠ WARNING

Make sure your hands, feet and other parts of your body are safely out of the way before closing the liftgate.

⚠ WARNING - Exhaust fumes

The liftgate should always be kept completely closed while the vehicle is in motion. If it is left open or ajar, poisonous exhaust gases may enter the car and serious illness or death may result.

⚠ WARNING - Rear cargo area

Occupants should never ride in the rear cargo area where no restraints are available. Occupants should always be properly restrained.

Emergency liftgate safety release

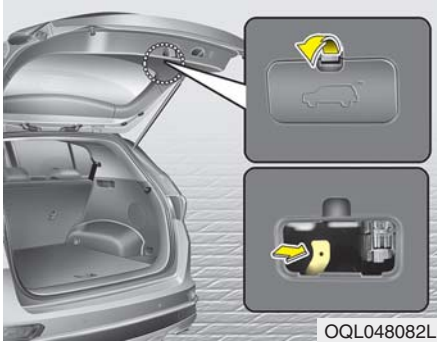

Your vehicle is equipped with an emergency liftgate safety release lever located on the bottom of the liftgate. If someone is inadvertently locked in the cargo area, the liftgate can be opened by pushing the release lever and pushing open the liftgate.

1. Remove the cover.
2. Push the release lever to the right.
3. Push up the liftgate.

⚠ WARNING

- **No one should be allowed to occupy the cargo area of the vehicle at any time. The cargo area is a very dangerous location in the event of a crash.**
- **Use the release lever for emergencies only. Use with extreme caution, especially while the vehicle is in motion.**

⚠ CAUTION

Make sure nothing is near the liftgate latch and striker while closing the liftgate. It may damage the liftgate's latch.

⚠ WARNING

Do not hold the part (gas lifter) that supports the liftgate. Be aware that the deformation of the part may cause vehicle damage and a risk of injury.

POWER LIFTGATE (IF EQUIPPED)

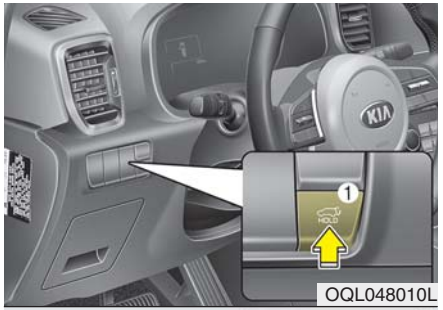

OQL048010L

OQL048077L

OQL048476L

(1) Power liftgate open / close button
(2) Power liftgate handle switch
(3) Power liftgate close button

✻ NOTICE

If ignition is ON, the power liftgate operates when :

- **Automatic shift lever is in P (Park).**

⚠ WARNING - Unattended children/pets

Never leave children or animals unattended in your vehicle. Children or animals might operate the power liftgate in such a way that could result in injury to themselves or others or damage to the vehicle.

✻ NOTICE

In cold and wet climates, power liftgate may not work properly due to freezing conditions.

✻ NOTICE

Do not attach heavy objects to the power liftgate when you operate the power liftgate additional. Weight on liftgate could cause damages to the system.

⚠ **CAUTION**

Do not close or open the power liftgate manually during automatic operation. This may cause damage to the power liftgate or to the vehicle.

If it is necessary to close or open the power liftgate manually when the battery is discharged or disconnected, make sure the liftgate is not in operation. Switch the power liftgate to the off position. Do not apply excessive force.

Opening the liftgate

OCDW048412

The power liftgate will open automatically by doing one of the following:

- Press the liftgate unlock button (4) on the smart key for approximately one second.

OQL048079L

Press the power liftgate open/close button for approximately one second.

- Press the liftgate handle switch carrying the smart key with you.

Closing the liftgate

Press the power liftgate close button for approximately one second when the liftgate is opened. The liftgate will close and lock automatically.

Press the power liftgate close button (4) for approximately one second when the tailgate is opened. The liftgate will close and lock automatically.

Power liftgate non-opening conditions

The power liftgate will not open automatically, when the vehicle is moving more than 3 km/h (2 mph) or the automatic shift lever is not in P(Park) position.

✻ NOTICE

The chime will sound continuously if you drive over 3 km/h (2 mph) with the liftgate opened. Stop your vehicle at a safe place as soon as possible to check if your liftgate is opened.

⚠ WARNING

Make sure there are no people or objects around the liftgate before opening or closing the power liftgate. Wait until the liftgate is open fully and stopped before loading or unloading cargo from the vehicle.

⚠ CAUTION

Do not operate the power liftgate more than 5 times continuously.

It may damage the power liftgate system. If you operate the power liftgate more than 5 times continuously, the chime will sound 3 times and the power liftgate will not operate. At this time, stop operating the liftgate and leave it for more than 1 minute.

✻ NOTICE

- **The power liftgate can be operated when the engine is not running. However the power liftgate operation consumes large amounts of vehicle electric power. To prevent the battery from being discharged, do not operate it excessively.**
- **To prevent the battery from being discharged, do not leave the power liftgate in the open position for a long time.**
- **Do not modify or repair any part of the power liftgate by yourself. This must be done by an authorized Kia dealer.**
- **When jacking up the vehicle to change a tire or repair the vehicle, do not operate the power liftgate. This could cause the power liftgate to operate improperly.**

(Continued)

(Continued)

- **In cold and wet climates, the power liftgate may not work properly due to freezing conditions.**
- **It is recommended to wait until the power liftgate is fully closed before starting the vehicle. The power liftgate may not close fully if the vehicle is started during automatic closing.**

Automatic reversal

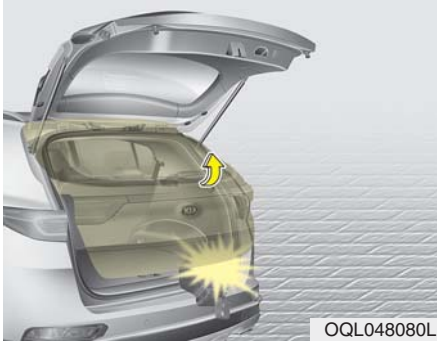

During power opening and closing if the power liftgate is blocked by an object or part of the body, the power liftgate will detect the resistance.

- If the resistance is detected while opening the liftgate, it will stop and move in the opposite direction.
- If the resistance is detected while closing the liftgate, it will stop and move in the opposite direction.

However, if the resistance is weak such as from an object that is thin or soft, or the liftgate is near the latched position, the automatic stop and reversal may not detect the resistance.

If the automatic reversal feature operates continuously more than twice during opening or closing operation, the power liftgate may stop at that position. At this time, close the liftgate manually and operate the liftgate automatically again.

⚠ WARNING

To prevent serious injury and damage take the following precautions when operating the power liftgate :

- **Keep all faces, hands, arms, body parts and other objects away from the path of the power liftgate.**
- **Do not intentionally place any body parts or objects in the path of the power liftgate to make sure the automatic stop and reversal operates.**
- **Do not allow children to play with the power liftgate.**

How to reset the power liftgate

If the battery has been discharged or disconnected, or if the related fuse has been replaced or disconnected, for the power liftgate to operate normally, reset the power liftgate as follows:

1. Put the automatic shift lever in P (Park).
2. While pressing the liftgate close button, press the liftgate handle switch for more than 3 seconds. (the chime will sound)
3. Close the liftgate manually.

If the power liftgate does not work properly after the above procedure, have the system checked by an authorized Kia dealer.

✻ NOTICE

If the power liftgate does not operate normally, first check the following condition before using the power liftgate.
Make sure the automatic shift lever is in P (Park).

Power liftgate opening height user setting

The driver may set the height of a fully opened liftgate by following the below instruction.

1. Position the liftgate manually to the height you prefer.
2. Press the liftgate close button for more than 3 seconds.
3. Close the liftgate manually after hearing the buzzer sound.

The liftgate will open to the height the driver has set up.

Smart Power Liftgate (if equipped)

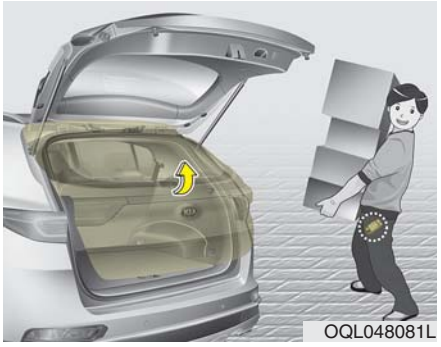

On a vehicle equipped with a smart key, the liftgate can be opened using the Smart Power Liftgate system.

How to use the Smart Power Liftgate

The liftgate can be opened with no-touch activation satisfying all the conditions below.

- After 15 seconds when all doors are closed and locked
- Positioned in the detecting area for more than 3 seconds.

✻ NOTICE

- **The Smart Power Liftgate does not operate when:**
  - **The smart key is detected within 15 seconds after the doors are closed and locked, and is continuously detected.**
  - **The smart key is detected within 15 seconds after the doors are closed and locked, and within 1.5 m (60 inches) from the front door handles. (for vehicles equipped with Welcome Light)**
  - **A door is not locked or closed.**
  - **The smart key is in the vehicle.**

1. Setting

To activate the Smart Power Liftgate, go to User Settings Mode and select Smart Power Liftgate on the LCD display.

✻ For more information, refer to the "LCD Display" section in this chapter.

2. Detect and Alert

If you are positioned in the detecting area (50 ~ 100 cm (20 ~ 40 inches) behind the vehicle) carrying a smart key, the hazard warning lights will blink and chime will sound for about 3 seconds to alert you the smart key has been detected and the liftgate will open.

✻ NOTICE

Do not approach the detecting area if you do not want the liftgate to open. If you have unintentionally entered the detecting area and the hazard warning lights and chime starts to operate, leave the detecting area with the smart key. The liftgate will stay closed.

3. Automatic opening

The hazard warning lights will blink and chime will sound 2 times and then the liftgate will open.

Make sure you close the liftgate before driving your vehicle.

Make sure there are no people or objects around the liftgate before opening or closing the liftgate. Make sure objects in the liftgate do not come out when opening the liftgate on a slope. It may cause serious injury. Make sure to deactivate the Smart Power Liftgate when washing your vehicle. Otherwise, the liftgate may open inadvertently.

⚠ WARNING

The key should be kept out of reach of children. Children may inadvertently open the Smart Power Liftgate while playing around the rear area of the vehicle.

⚠ CAUTION - Liftgate lift

Make certain that you close the liftgate before driving your vehicle. Possible damage may occur to the liftgate lift cylinders and attached hardware if the liftgate is not closed prior to driving.

How to deactivate the Smart Power Liftgate function using the smart key

OBDM048031

1. Door lock
2. Door unlock
3. Liftgate open
4. Panic

If you press any button of the smart key during the Detect and Alert stage, the Smart Power Liftgate function will be deactivated.

Make sure to be aware of how to deactivate the Smart Power Liftgate function for emergency situations.

✻ NOTICE

- **If you press the door unlock button (2), the Smart Power Liftgate function will be deactivated temporarily. But, if you do not open any door for 30 seconds, the smart power liftgate function will be activated again.**
- **If you press the liftgate open button (3) for more than 1 second, the liftgate opens.**
- **If you press the door lock button (1) or liftgate open button (3) when the Smart Power Liftgate function is not in the Detect and Alert stage, the smart power liftgate function will not be deactivated.**
- **In case you have deactivated the Smart Power Liftgate function by pressing the smart key button and opened a door, the smart power liftgate function can be activated again by closing and locking all doors.**

Detecting area

- The Smart Power Liftgate operates with a welcome alert if the smart key is detected within 50 ~ 100 cm (20 ~ 40 inches) from the liftgate.
- The alert stops once the smart key is positioned outside the detecting area during the Detect and Alert stage.

✻ NOTICE

- **The Smart Power Liftgate function will not work if any of the following occurs:**
  - **The smart key is close to a radio transmitter such as a radio station or an airport which can interfere with normal operation of the transmitter.**
  - **The smart key is near a mobile two way radio system or a cellular phone.**
  - **Another vehicle's smart key is being operated close to your vehicle.**
- **The detecting range may decrease or increase when :**
  - **One side of the tire is raised to replace a tire or to inspect the vehicle.**
  - **The vehicle is parked on a slope or unpaved road, etc.**

WINDOWS

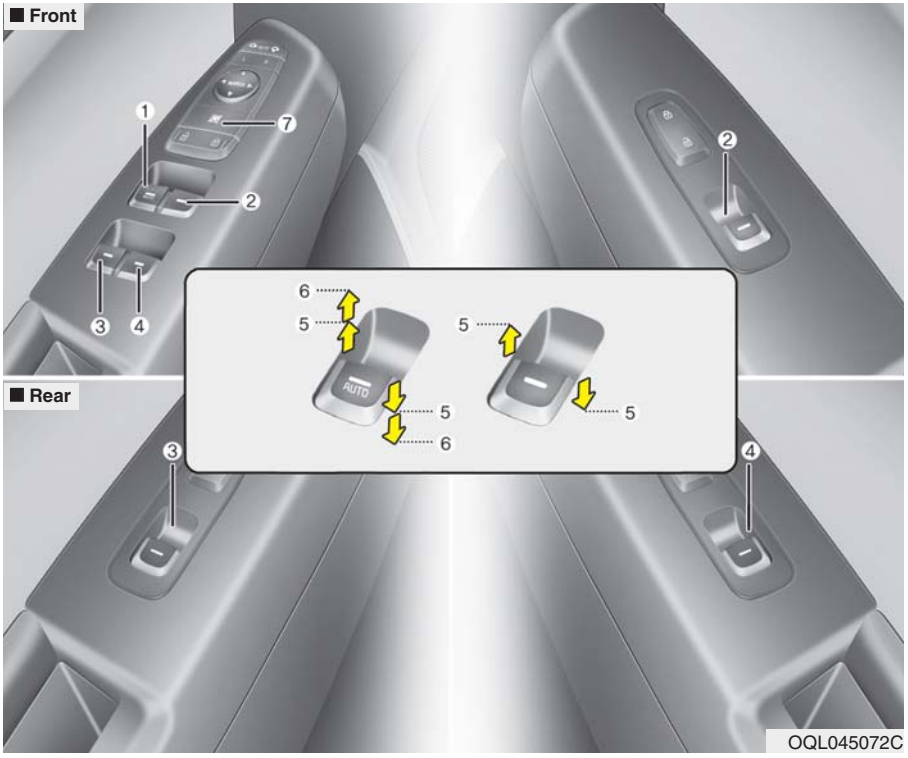

(1) Driver's door power window switch
(2) Front passenger's door power window switch
(3) Rear door (left) power window switch
(4) Rear door (right) power window switch
(5) Window opening and closing
(6) Automatic power window up/down
(7) Power window lock button

* if equipped

✻ NOTICE

In cold and wet climates, power windows may not work properly due to freezing conditions.

Power windows

The ignition switch must be in the ON position for power windows to operate.

Each door has a power window switch that controls the door's window. The driver has a power window lock button which can block the operation of rear seat windows. The power windows can be operated for approximately 30 seconds after the ignition key is removed or turned to the ACC or LOCK (or OFF) position. If the front doors are opened; however, the power windows cannot be operated even within the 30 second period.

If the window cannot be close because it is blocked by objects, remove the objects and close the window.

✻ NOTICE

While driving with the rear windows down or with the sunroof (if equipped) in an open (or partially open) position, your vehicle may demonstrate a wind buffeting or pulsation noise. This noise is a normal occurrence and can be reduced or eliminated by taking the following actions. If the noise occurs with one or both of the rear windows down, partially lower both front windows approximately 2.5 cm (1 in.). If you experience the noise with the sunroof open, slightly reduce the size of the sunroof opening.

⚠ CAUTION

Do not install any accessories in the vehicle that extend into the open window area. Such objects will impact the proper function of the Automatic reversal "jam protection" feature described on page 4-41 of this manual.

Window opening and closing

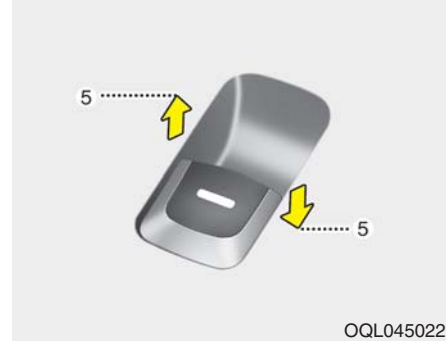

The driver's door has a master power window switch that controls all the windows in the vehicle.

To open or close a window, press down or pull up the front portion of the corresponding switch to the first detent position (5).

Auto up/down window

OQL045021

Pressing or pulling up the power window switch momentarily to the second detent position (6) completely lowers or raises the window even when the switch is released. To stop the window at the desired position while the window is in operation, pull up or press down and release the switch.

If the power window does not operate normally, the automatic power window system must be reset as follows:

1. Turn the ignition switch to the ON position.
2. Close the driver's and passenger's window and continue pulling up the driver's power window switch for at least 1 second after the window is completely closed.

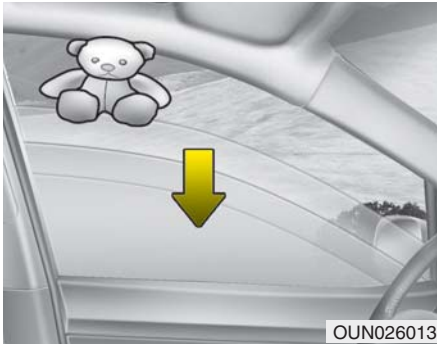
OUN026013

Automatic reversal (for Auto up/down window)

If the upward movement of the window is blocked by an object or part of the body, the window will detect the resistance and will stop upward movement. The window will then lower approximately 30 cm (11.8 in.) to allow the object to be cleared.

The distance may vary based on the size or position of the window. If the window detects the resistance while the power window switch is pulled up continuously, the window will stop upward movement then lower approximately 2.5 cm (1 in.).

If the power window switch is pulled up continuously again within 5 seconds after the window is lowered by the automatic window reversal feature, the automatic window reversal will not operate.

The automatic reverse feature for the driver's window is only active when the "auto up" feature is used by fully pulling up the switch. The automatic reverse feature will not operate if the window is raised using the halfway position on the power window switch.

⚠ WARNING

Do not install any accessories in the vehicle that extend into the open window area. Such objects could prevent the automatic reverse feature from functioning.

⚠ WARNING

Always check for obstructions before raising any window to avoid injuries or vehicle damage. If an object less than 4 mm (0.16 in.) in diameter is caught between the window glass and the upper window channel, the automatic reverse window may not detect the resistance and will not stop and reverse direction.

⚠ WARNING

The automatic reverse feature doesn't activate while resetting before power window system. Make sure body parts or other objects are safely out of the way before closing the windows to avoid injuries or vehicle damage.

Power window lock button

- The driver can disable the power window switches on the rear seat doors by pressing the power window lock button located on the driver's door to the LOCK position (pressed).

- **When the power window lock button is pressed :**
  - The driver's master control can operate all the power windows.
  - The front passenger's control can operate the front passenger's power window.
  - The rear passenger's control can not operate the rear passenger's power window.

⚠ **CAUTION - Opening /closing Window**

To prevent possible damage to the power window system, do not open or close two windows or more at the same time. This will also ensure the longevity of the fuse.

Always double check to make sure all arms, hands, head and other obstructions are safely out of the way before closing a window.

⚠ **WARNING - Power windows**

- **Do not allow children to play with the power windows. Keep the power window lock button (on the driver's door) in the LOCK (pressed) position.**
- **Do not extend a face or arms outside through the window opening while driving.**

HOOD

Opening the hood

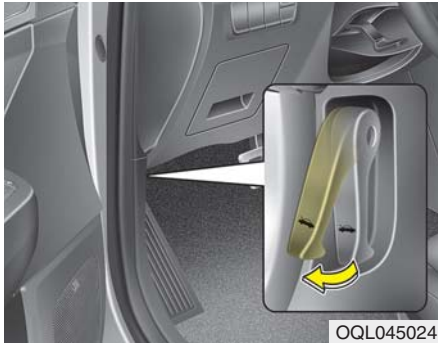

1. Pull the release lever to unlatch the hood. The hood should pop open slightly.

Open the hood after turning off the engine on a flat surface, shifting the shift lever to the P (Park) position and setting the parking brake.

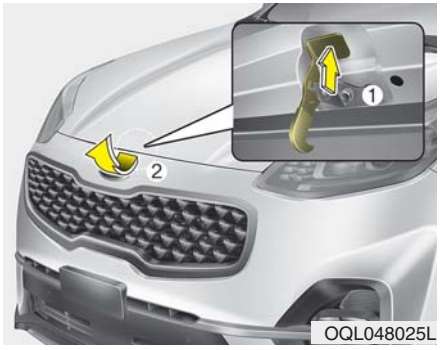

2. Go to the front of the vehicle, raise the hood slightly, push the secondary latch (1) upward inside of the hood center and lift the hood (2).
3. Raise the hood.

4. Pull out the stay rod.
5. Hold the hood opened with the stay rod (1).

⚠ WARNING - Stay Rod

- **To prevent from being burned by hot metal, grab the stay rod in the area wrapped in rubber.**
- **Ensure the stay rod is completely inserted into the hole provided whenever you inspect the engine compartment. This will prevent the hood from falling and possibly injuring you.**

Hood open warning

OQL048255L

The warning message will appear on the LCD display when hood is open.

The warning chime will operate when the vehicle is being driven at or above 3km/h with the hood open.

Closing the hood

1. Before closing the hood, check the following:
   - All filler caps in engine compartment must be correctly installed.
   - Gloves, rags or any other combustible material must be removed from the engine compartment.
2. Return the support rod to its clip to prevent it from rattling.
3. Lower the hood until it is about 30 cm above the closed position and let it drop. Make sure that it locks into place.
4. Check that the hood has engaged properly. If the hood can be raised slightly, it is not properly engaged.

   Open it again and close it with a little more force.

⚠ CAUTION - Hood obstruction

Before closing the hood, ensure that all obstructions are removed from the hood opening. Closing the hood with an obstruction present in the hood opening may result in property damage or severe personal injury.

⚠ WARNING - Fire risk

Do not leave gloves, rags or any other combustible material in the engine compartment. Doing so may cause a heat-induced fire.

⚠ WARNING - Unsecured engine hood

Always double check to be sure that the hood is firmly latched before driving away. If it is not latched, the hood could fly open while the vehicle is being driven, causing a total loss of visibility, which might result in an accident.

FUEL FILLER LID

Opening the fuel filler lid

1. To open the fuel filler lid, press the 3 o`clock position edge of the fuel filler lid.

✻ NOTICE

The fuel filler lid will open when driver door is unlocked.

2. Pull the fuel filler lid (1) out to fully open.
3. To remove the fuel tank cap (2), turn it counterclockwise. You may hear a hissing noise as the pressure inside the tank equalizes.
4. Place the cap on the fuel filler lid.

✻ NOTICE

If the fuel filler door does not open because ice has formed around it, tap lightly or push on the door to break the ice and release the door. Do not pry on the door. If necessary, spray around the door with an approved deicer fluid (do not use radiator antifreeze) or move the vehicle to a warm place and allow the ice to melt.

Closing the fuel filler lid

1. To install the cap, turn it clockwise until it “clicks” once. This indicates that the cap is securely tightened.
2. Close the fuel filler lid and push it in lightly making sure that it is securely closed.

✻ NOTICE

There may be an intermittent noise near the refueling hole while the engine is idling if the fuel cap is not closed securely. This occurs normally with the OBD system.

✻ NOTICE

When refueling on unlevel ground, the fuel gauge may not point to the F position.
It is not a malfunction. If you move your vehicle to a level ground, the fuel gauge will move to the full position.

⚠ WARNING - Refueling

Always remove the fuel cap carefully and slowly. If the cap is venting fuel or if you hear a hissing sound, wait until the condition stops before completely removing the cap. If pressurized fuel sprays out, it can cover your clothes or skin and subject you to the risk of fire and burns.

Always check that the fuel cap is installed securely to prevent fuel spillage in the event of an accident.

✻ NOTICE

Tighten the cap until it clicks once, otherwise the fuel cap open warning indicator light will illuminate.

⚠ WARNING - Fire/explosion risk

Read and follow all warnings posted at the gas station facility. Failure to follow all warnings may result in severe personal injury, severe burns or death due to fire or explosion.

⚠ WARNING - Static electricity

- Before touching the fuel nozzle, you should eliminate potentially dangerous static electricity discharge by touching another metal part of the vehicle, a safe distance away from the fuel filler neck, nozzle, or other gas source.
- Do not get back into a vehicle once you have begun refueling since you can generate static electricity by touching, rubbing or sliding against any item or fabric (polyester, satin, nylon, etc.) capable of producing static electricity. Static electricity discharge can ignite fuel vapors resulting in rapid burning. If you must reenter the vehicle, you should once again eliminate potentially dangerous static electricity discharge by touching a metal part of the vehicle, away from the fuel filler neck, nozzle or other gasoline source.

⚠ WARNING - Portable fuel container

When using an approved portable fuel container, be sure to place the container on the ground prior to refueling. Static electricity discharge from the container can ignite fuel vapors causing a fire. Once refueling has begun, contact with the vehicle should be maintained until the filling is complete. Use only approved portable plastic fuel containers designed to carry and store gasoline.

⚠ WARNING - Cell phone fires

Do not use cellular phones while refueling. Electric current and/or electronic interference from cellular phones can potentially ignite fuel vapors causing a fire.

⚠ WARNING - Smoking

DO NOT use matches or a lighter and DO NOT SMOKE or leave a lit cigarette in your vehicle while at a gas station especially during refueling. Automotive fuel is highly flammable and can, when ignited, result in fire.

⚠ WARNING - Refueling & Vehicle fires

When refueling, always shut the engine off. Sparks produced by electrical components related to the engine can ignite fuel vapors causing a fire. Once refueling is complete, check to make sure the filler cap and filler door are securely closed, before starting the engine.

Make sure to refuel your vehicle according to the “Fuel requirements” suggested in chapter 1.

If the fuel filler cap requires replacement, use only a genuine Kia cap or the equivalent specified for your vehicle. An incorrect fuel filler cap can result in a serious malfunction of the fuel system or emission control system.

⚠ **CAUTION - Exterior paint**

Do not spill fuel on the exterior surfaces of the vehicle. Any type of fuel spilled on painted surfaces may damage the paint.

PANORAMIC SUNROOF (IF EQUIPPED)

If your vehicle is equipped with a sunroof, you can slide or tilt your sunroof with the sunroof control lever located on the overhead console.

The sunroof can be operated for approximately 30 seconds after the ignition key is removed or turned to the ACC or LOCK (or OFF) position.

However, if the front door is opened, the sunroof cannot be operated even within the 30 second period.

⚠ CAUTION - Sunroof motor damage

To prevent damage to the sunroof, periodically remove any dirt that may accumulate on the guide rail.

In cold and wet climates, the sunroof may not work properly due to freezing conditions.

After the vehicle is washed or in a rainstorm, be sure to wipe off any water that is on the sunroof before operating it.

⚠ CAUTION - Sunroof control lever

Do not continue to press the sunroof control lever after the sunroof is fully opened, closed, or tilted. Damage to the motor or system components could occur.

The sunroof cannot slide when it is in the tilt position nor can it be tilted while in an open or slide position.

⚠ WARNING - Roof cargo

Do not operate the sun roof while using the roof rack to transport cargo. This may cause the cargo to come loose and distract the driver.

⚠ WARNING

Never adjust the sunroof or sunshade while driving. This could result in loss of control and an accident that may cause death, serious injury, or property damage.

⚠ CAUTION

Make sure the sunroof is fully closed when leaving your vehicle. If the sunroof is opened, rain or snow may leak through the sunroof and wet the interior as well as allow theft to occur.

⚠ WARNING

To avoid accidental injury, do not let children operate the sunroof without adult supervision.

⚠ WARNING

Do not allow children to operate the sunroof. This may result in injury to the child.

Sunroof open warning (if equipped)

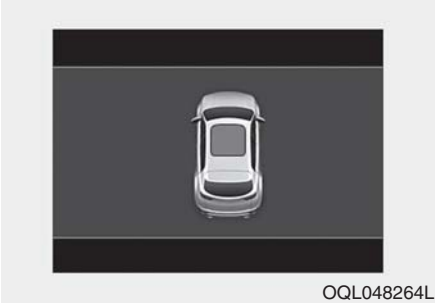

OQL048264L

If the driver removes the ignition key (smart key: turns off the engine) when the sunroof is not fully closed, the warning chime will sound for a few seconds and a message will appear on the LCD display or the warning indicator will illuminate.

Close the sunroof securely when leaving your vehicle.

Sunshade

OQL045029

To open the sunshade

Push the sunroof control lever backward to the 1st detent position.

To close the sunshade when the sunroof glass is closed

Push the sunroof control lever forward to the 1st detent position.

To stop the sliding at any point, press the sunshade control switch momentarily.

✻ NOTICE

Wrinkles formed on the sunshade as material characteristic are normal.

⚠ CAUTION - Automatic sunroof shade

- ***Do not pull or push the sunshade by hand as such action may damage the sunshade or cause it to malfunction.***
- ***Close the sunroof when driving in dusty environments. Dust may cause a malfunction of the vehicle system.***

✻ NOTICE

Only the front glass of the panorama sunroof opens and closes.

Sliding the sunroof

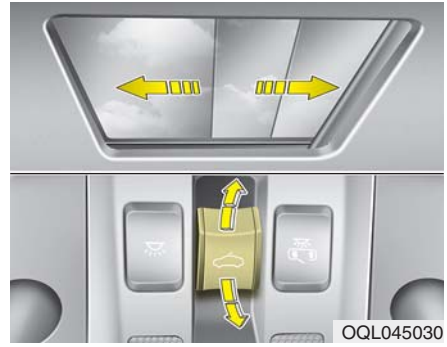

When the sunshade is closed

Push the sunroof control lever backward to the 2nd detent position, both the sunshade and sunroof glass will slide all the way open. To stop the sunroof movement at any point, push the sunroof control glass lever briefly.

When the sunshade is opened

Push the sunroof glass control lever backward to the 1st or 2nd detent position, the sunroof glass will be opened.

To stop the sunroof glass movement at any point, push the sunroof control lever briefly.

Automatic reversal

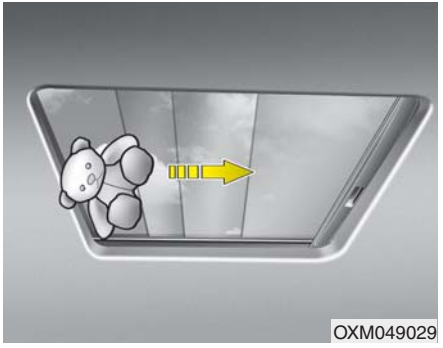

If an object or part of the body is detected while the sunroof is closing automatically, it will reverse the direction, and then stop.

The auto reverse function does not work if a tiny obstacle is between the sliding glass and the sunroof sash. You should always check that all passengers and objects are away from the sunroof before closing it.

Objects less than 4 mm (0.16 inch) in diameter caught between the sunroof glass and the front glass channel may not be detected by the automatic reverse glass and the glass will not stop and reverse direction.

⚠ WARNING - Sunroof

- **Be careful that no head, hands and body parts are obstructed by a closing sunroof.**
- **Do not extend the face, neck, arms or body outside the sunroof while driving.**

⚠ WARNING - Sunroof Operation

When closing the sunroof, make sure there are no body parts in the movement range of the sliding roof. Parts of the body could become trapped or crushed.

⚠ CAUTION

To prevent damage to the sunroof, periodically remove any dirt that may accumulate on the guide rail.

✻ NOTICE

If you drive with the sunroof opened right after a vehicle wash or rain, water may get inside the vehicle.

⚠ CAUTION - Sunroof motor damage

If you try to open the sunroof when the temperature is below freezing or when the sunroof is covered with snow or ice, the glass or the motor could be damaged.

Tilting the sunroof

When the sunshade is closed

Push the sunroof control lever upward, the sunshade will slide halfway open then the sunroof glass will tilt.

To stop the sunroof movement at any point, push the sunroof control lever momentarily.

When the sunshade is opened

Push the sunroof control lever upward, the sunroof glass will tilt.

To stop the sunroof movement at any point, push the sunroof control lever momentarily.

Closing the sunroof

To close the sunroof glass with the sunshade

Push the sunroof control lever forward to the 2nd detent position. The sunroof glass and sunshade will close automatically.

To stop the sunroof movement at any point, push the sunroof control lever momentarily.

To close the sunroof glass only

Push the sunroof control lever forward to the 1st detent position. The sunroof glass will close automatically.

To stop the sunroof movement at any point, push the sunroof control lever momentarily.

Resetting the sunroof

Whenever the vehicle battery is disconnected or discharged, you must reset your sunroof system as follows:

1. Start the engine.
2. Close the sunshade and sunroof completely if opened.
3. Release the sunroof control lever.
4. Push the sunroof control lever forward in the direction of close until the sunshade slightly moves. Then, release the lever.
5. Push the sunroof control lever forward in the direction of close, until the sunroof operates as follows again:

   Sunshade Open → Glass Tilt Open → Glass Slide Open → Glass Slide Close → Sunshade Close

   Then, release the lever.

When this is complete, the sunroof system has been reset and one touch open and close should be restored.

✻ NOTICE

If you do not reset the sunroof, it may not work properly.

STEERING WHEEL

Electronic power steering (EPS)

The power steering uses a motor to assist you in steering the vehicle. If the engine is off or if the power steering system becomes inoperative, the vehicle may still be steered, but it will require increased steering effort.

Electronic power steering is controlled by a power steering control unit which senses the steering wheel torque and vehicle speed to command the motor.

The steering becomes heavier as the vehicle's speed increases and becomes lighter as the vehicle's speed decreases for optimum steering control.

Should you notice any change in the effort required to steer during normal vehicle operation, have the power steering checked by an authorized Kia dealer.

- If the Electronic Power Steering System does not operate normally, the warning light will illuminate on the instrument cluster. The steering wheel may require increased steering effort. Take your vehicle to an authorized Kia dealer and have the vehicle checked as soon as possible.
- When you operate the steering wheel in low temperature, the steering effort may be high or abnormal noise may occur. If temperature rises, the noise will likely disappear. This is a normal condition.
- When the vehicle is stationary, and the steering wheel is turned all the way to the left or right continuously, the steering wheel becomes harder to turn. The power assist is limited to protect the motor from overheating.

  As time passes, the steering wheel will return to its normal condition.

✻ NOTICE

The following symptoms may occur during normal vehicle operation:

- **The EPS warning light does not illuminate.**
- **The steering gets heavy immediately after turning the ignition switch on. This happens as the system performs the EPS system diagnostics. When the diagnostics are completed, the steering wheel will return to its normal condition.**
- **A click noise may be heard from the EPS relay after the ignition switch is turned to the ON or LOCK (OFF) position.**
- **A motor noise may be heard when the vehicle is at a stop or at a low driving speed.**
- **If the Electronic Power Steering System does not operate normally, the warning light will illuminate on the instrument cluster. The steering wheel may become difficult to control or operate abnormally. Take your vehicle to an authorized Kia dealer and have the vehicle checked as soon as possible.**

(Continued)

(Continued)

- **When the charging system warning light comes on due to the low voltage (When the alternator or battery) does not operate normally or malfunctions), the steering wheel may require increased steering effort.**

Tilt and telescopic steering

Tilt and telescopic steering allows you to adjust the steering wheel before you drive. You can also raise it to give your legs more room when you exit and enter the vehicle.

The steering wheel should be positioned so that it is comfortable for you to drive, while permitting you to see the instrument panel warning lights and gauges.

⚠ WARNING - Steering wheel adjustment

Never adjust the angle and height of the steering wheel while driving. You may lose steering control.

To change the steering wheel angle, pull down the lock-release lever (1), adjust the steering wheel to the desired angle (2) and height (3, if equipped) then pull up the lock-release lever to lock (4) the steering wheel in place. Be sure to adjust the steering wheel to the desired position before driving.

✻ NOTICE

After adjustment, sometimes the lock release lever may not lock the steering wheel. It is not a malfunction. This occurs when two gears are not engaged correctly. In this case, adjust the steering wheel again and then lock the steering wheel.

Heated steering wheel (if equipped)

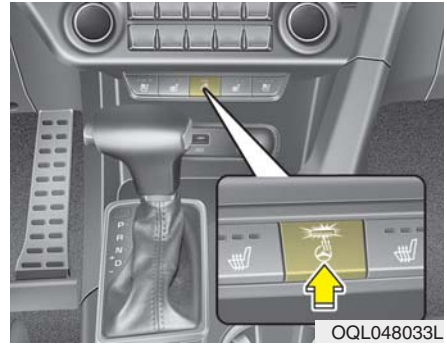

With the ignition switch in the ON position, pressing the heated steering wheel button warms the steering wheel. The indicator on the button will illuminate.

To turn the heated steering wheel off, press the button once again. The indicator on the button will turn off.

⚠ WARNING

If the steering wheel becomes too warm, turn the system off. The heated steering wheel may cause burns even at low temperatures, especially if used for long periods of time.

✻ NOTICE

The heated steering wheel will turn off automatically approximately 30 minutes after the heated steering wheel is turned on.

⚠ **CAUTION**

- ***Do not install any type of grip cover for the steering wheel, it may impair the function of the heated steering wheel system.***
- ***When cleaning the heated steering wheel, do not use an organic solvent such as paint thinner, benzene, alcohol and gasoline. Doing so may damage the surface of the steering wheel.***
- ***If the surface of steering wheel is damaged by sharp object, damage to the heated steering wheel components could occur.***

Horn

To sound the horn, press the horn symbols on your steering wheel. Check the horn regularly to be sure it operates properly.

✻ **NOTICE**

To sound the horn, press the area indicated by the horn symbol on your steering wheel (see illustration). The horn will operate only when this area is pressed.

MIRRORS

Inside rearview mirror

Adjust the rearview mirror so that the center view through the rear window is seen. Make this adjustment before you start driving.

Do not place objects in the rear seat or cargo area which would interfere with your vision through the rear window.

⚠ WARNING - Mirror adjustment

Do not adjust the rearview mirror while the vehicle is moving. This could result in loss of control.

⚠ WARNING

Do not modify the inside mirror and don't install a wide mirror. It could result in injury during an accident or deployment of the air bag.

Day/night rearview mirror (if equipped)

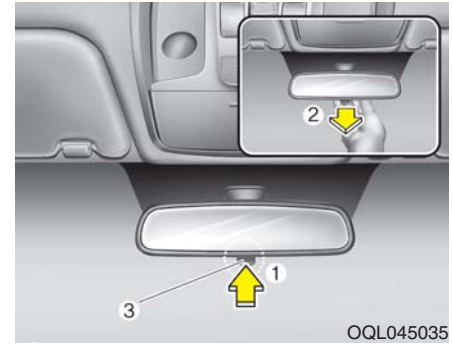

Make this adjustment before you start driving and while the day/night lever (3) is in the day position.

Pull the day/night lever (3) toward you to reduce the glare from the headlights of the vehicles behind you during night driving.

Remember that you lose some rearview clarity in the night position.

❊ (1) : Day, (2) : Night

Electric chromatic mirror (ECM) (if equipped)

The electric rearview mirror automatically controls the glare from the headlights of the vehicles behind you in nighttime or low light driving conditions. The sensor mounted in the mirror senses the light level around the vehicle and automatically controls the headlight glare from the vehicles behind you.

When the engine is running, the glare is automatically controlled by the sensor mounted in the rearview mirror.

Whenever the shift lever is shifted into reverse (R), the mirror will automatically go to the brightest setting in order to improve the drivers view behind the vehicle.

⚠ CAUTION - Cleaning mirror

When cleaning the mirror, use a paper towel or similar material dampened with glass cleaner. Do not spray glass cleaner directly on the mirror. It may cause the liquid cleaner to enter the mirror housing.

To operate the electric rearview mirror:

- The mirror defaults to the ON position whenever the ignition switch is turned on.
- Press the ON/OFF button (1) to turn the automatic dimming function off. The mirror indicator light (2) will turn off.

  Press the ON/OFF button (1) to turn the automatic dimming function on. The mirror indicator light (2) will illuminate.

❊ (2) : Indicator, (3) : Sensor

Electrochromic mirror with HomeLink system (if equipped)

To operate the electric rearview mirror

Press the I button (1) to turn the automatic- dimming function on. The mirror indicator light will illuminate.

Press the O button (2) to turn the automatic- dimming function off. The mirror indicator light will turn off.

HomeLink® Wireless Control System

Your new mirror comes with an integrated HomeLink Universal Transceiver, which allows you to program the mirror to activate your garage door(s), estate gate, home lighting, etc. The mirror actually learns the codes from your various existing transmitters.

Retain the original transmitter for future programming procedures (i.e., new vehicle purchase). It is also suggested that upon the sale of the vehicle, the programmed HomeLink buttons be erased for security purposes.

Programming

Your vehicle may require the ignition switch to be turned to the ACC position for programming and/or operation of HomeLink. It is also recommended that a new battery be replaced in the hand-held transmitter of the device being programmed to HomeLink for quicker training and accurate transmission of the radio-frequency.

Follow these steps to train your HomeLink mirror:

1. When programming the buttons for the first time, press and hold the left and center buttons (,) simultaneously until the indicator light begins to flash after approximately 20 seconds. (This procedure erases the factory-set default codes. Do not perform this step when programming the additional HomeLink buttons.)

✻ NOTICE

For non rolling code garage door openers, follow steps 2 - 3.
For rolling code garage door openers, follow steps 2 - 6.
For Canadian Programming, please follow the Canadian Programming section.
For help with determining whether your garage door opener is non-rolling code or rolling code, please refer to the garage door openers owner's manual or contact HomeLink customer service at 1-800-355-3515.

2. Press and hold the button on the HomeLink system you wish to train and the button on the transmitter while the transmitter is approximately 2 ~ 8 cm (1 to 3 inches) away from the mirror. Do not release the buttons until step 3 has been completed.
3. The HomeLink indicator light will flash, first slowly and then rapidly. When the indicator light flashes rapidly, both buttons may be released. (The rapid flashing light indicates successful programming of the new frequency signal.)

✻ NOTICE

Some gate and garage door openers may require you to replace step #3 with the "cycling" procedure noted in the "Canadian Programming" section of this document.

Rolling code programming

To train a garage door opener (or other rolling code equipped devices) with the rolling code feature, follow these instructions after completing the "Programming" portion of this text. (A second person may make the following training procedures quicker & easier.)

4. Locate the "learn" or "smart" button on the device's motor head unit. Exact location and color of the button may vary by product brand. If there is difficulty locating the "learn" or "smart" button, reference the device's owner's manual or contact HomeLink at 1-800-355-3515 or on the internet at www.homelink.com.
5. Press and release the "learn" or "smart" button on the device's motor head unit. You have 30 seconds to complete step number 6.

6. Return to the vehicle and firmly press and release the programmed HomeLink button up to three times. The rolling code equipped device should now recognize the HomeLink signal and activate when the HomeLink button is pressed. The remaining two buttons may now be programmed if this has not previously been done. Refer to the “Programming” portion of this text.

Operating HomeLink

To operate, simply press the programmed HomeLink button. Activation will now occur for the trained product (garage door, security system, entry door lock, estate gate, or home or office lighting). For convenience, the hand-held transmitter of the device may also be used at any time. The HomeLink Wireless Controls System (once programmed) or the original hand-held transmitter may be used to activate the device (e.g. garage door, entry door lock, etc.). In the event that there are still programming difficulties, contact HomeLink at 1-800-355-3515 or on the internet at www.homelink.com.

Erasing programmed HomeLink buttons

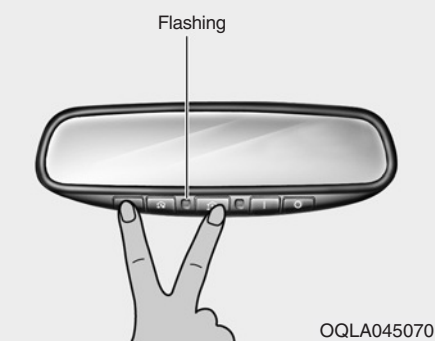

To erase the three programmed buttons (individual buttons cannot be erased):

- Press and hold the left and center buttons simultaneously, until the indicator light begins to flash (approximately 20 seconds). Release both buttons. Do not hold for longer than 30 seconds.

HomeLink is now in the train (or learning) mode and can be programmed at any time.

Reprogramming a single HomeLink button

To program a device to HomeLink using a HomeLink button previously trained, follow these steps:

1. Press and hold the desired HomeLink button. Do NOT release until step 4 has been completed.
2. When the indicator light begins to flash slowly (after 20 seconds), position the hand-held transmitter 2-8 cm (1 to 3 inches) away from the HomeLink surface.
3. Press and hold the hand-held transmitter button (or press and “cycle” - as described in “Canadian Programming”).
4. The HomeLink indicator light will flash, first slowly and then rapidly. When the indicator light begins to flash rapidly, release both buttons.

The previous device has now been erased and the new device can be activated by pushing the HomeLink button that has just been programmed. This procedure will not affect any other programmed HomeLink buttons.

Canadian Programming Garage & gate openers

During programming, your hand-held transmitter may automatically stop transmitting. Continue to press and hold the HomeLink button (note steps 2 through 4 in the “Programming” portion of this text) while you press and re-press (“cycle”) your handheld transmitter every two seconds until the frequency signal has been learned. The indicator light will flash slowly and then rapidly after several seconds upon successful training.

Accessories

If you would like additional information on the HomeLink Wireless Control System, HomeLink compatible products, or to purchase other accessories such as the HomeLink® Lighting Package, please contact HomeLink at 1-800-355-3515 or on the internet at www.homelink.com.

FCC ID: NZLZTVHL3

IC: 4112A-ZTVHL3

This device complies with Industry Canada licence-exempt RSS standard(s).

Operation is subject to the following two conditions:

(1) This device may not cause interference, and

(2) This device must accept any interference, including interference that may cause undesired operation of the device.

Electric chromic mirror (ECM) with HomeLink® system, compass (if equipped)

Your vehicle may be equipped with a Gentex Automatic-Dimming Mirror with a Z-Nav™ Electronic Compass Display and an Integrated HomeLink® Wireless Control System. During nighttime driving, this feature will automatically detect and reduce rearview mirror glare while the compass indicates the direction the vehicle is pointed. The HomeLink® Universal Transceiver allows you to activate your garage door(s), electric gate, home lighting, etc.

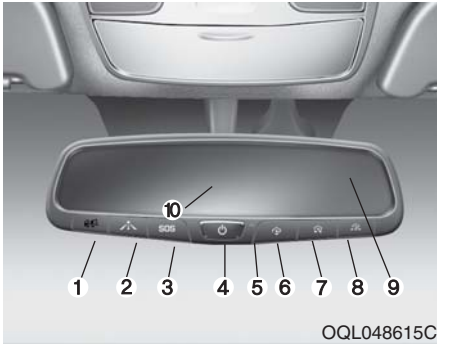

(1) Telematics button

(2) Telematics button

(3) Telematics button

(4) Compass control button & Dimming ON/OFF button

(5) Status indicator LED

(6) Channel 1 button

(7) Channel 2 button

(8) Channel 3 button

(9) Compass display

(10) Rear light sensor

Automatic-Dimming Night Vision Safety™ (NVS®) Mirror (if equipped)

The NVS® Mirror automatically reduces glare by monitoring light levels in the front and the rear of the vehicle. Any object that obstructs either light sensor will degrade the automatic dimming control feature.

For more information regarding NVS® mirrors and other applications, please refer to the Gentex website:

www.gentex.com

Your mirror will automatically dim upon detecting glare from the vehicles traveling behind you. The auto-dimming function can be controlled by pressing the Dimming ON/OFF button:

1. Pressing and holding the ⏻ button for 3 seconds turns the auto-dimming function OFF which is indicated by the green Status Indicator LED turning off.
2. Pressing and holding the ⏻ button for 3 seconds again turns the auto-dimming function ON which is indicated by the green Status Indicator LED turning on.

The mirror defaults to the ON position each time the vehicle is started.

Z-Nav™ Compass Display

The NVS™ Mirror in your vehicle is also equipped with a Z-Nav™ Compass that shows the vehicle Compass heading in the Display Window using the 8 basic cardinal headings (N, NE, E, SE, etc.).

Compass function

The Compass can be turned ON and OFF and will remember the last state when the ignition is cycled. To turn the display feature ON/OFF:

1. Press and release the ⏻ button within 1 second to turn the display feature OFF.
2. Press and release the ⏻ button again within 1 second to turn the display back ON.

Additional options can be set with press and hold sequences of the ⏻ button and are detailed below.

There is a difference between magnetic north and true north. To compensate for this difference you will need to adjust the Zone setting based on where you live.

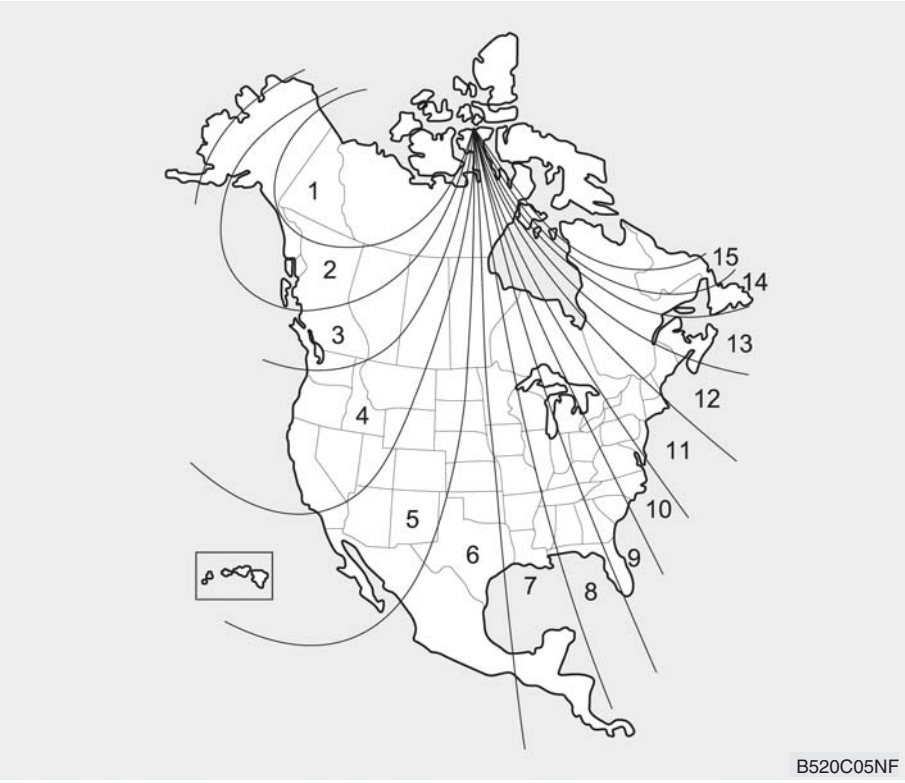

To adjust the Zone setting:

1. Determine the desired Zone Number based upon your current location on the Zone Map.
2. Press and hold the ⏻ button for 6 seconds, the current Zone Number will appear on the display.
3. Pressing and holding the ⏻ button again will cause the numbers to increment (Note: they will repeat …13, 14, 15, 1, 2, …). Releasing the button when the desired Zone Number appears on the display will set the new Zone.
4. Within about 5 seconds the compass will start displaying a compass heading again.

There are some conditions that can cause changes to the vehicle magnets, such as installing a ski rack or a CB antenna. Body repair work on the vehicle can also cause changes to the vehicle's magnetic field. In these situations, the compass will need to be re-calibrated to quickly correct these changes.

If you need to recalibrate the compass:

1. Press and hold the ⏻ button for more than 9 seconds. When the compass memory is cleared a "C" will appear in the display.
2. Drive the vehicle in 2 complete circles at less than 8 km/h (5 mph).

Integrated HomeLink® Wireless Control System

The HomeLink® Wireless Control System can replace up to three hand-held radio-frequency (RF) transmitters with a single built-in device. This innovative feature will learn the radio frequency codes of most current transmitters to operate devices such as gate operators, garage door openers, entry door locks, security systems, even home lighting. Both standard and rolling code-equipped transmitters can be programmed by following the outlined procedures.

Additional HomeLink® information can be found at: www.homelink.com or by calling 1-800-355-3515.

Retain the original transmitter of the RF device you are programming for use in other vehicles as well as for future HomeLink® programming. It is also suggested that upon the sale of the vehicle, the programmed HomeLink® buttons be erased for security purposes.

⚠ WARNING

Before programming HomeLink® to a garage door opener or gate operator, make sure people and objects are out of the way of the device to prevent potential harm or damage. Do not use the HomeLink® with any garage door opener that lacks the safety stop and reverse features required by U.S. federal safety standards (this includes any garage door opener model manufactured before April 1, 1982). A garage door that cannot detect an object - signaling the door to stop and reverse - does not meet current U.S. federal safety standards. Using a garage door opener without these features increases the risk of serious injury or death.

Programming HomeLink®

Please note the following:

- When programming a garage door opener, it is advised to park the vehicle outside of the garage.
- It is recommended that a new battery be placed in the hand-held transmitter of the device being programmed to HomeLink® for quicker training and accurate transmission of the radio-frequency signal.
- Some vehicles may require the ignition switch to be placed in the ACC (or "Accessories") position for programming and/or operation of HomeLink®.
- In the event that there are still programming difficulties or questions after following the programming steps listed below, contact HomeLink® at: www.homelink.com or by calling 1-800-355-3515.

Programming

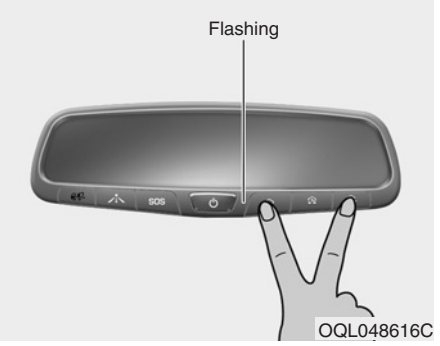

To train most devices, follow these instructions:

1. For first-time programming, press and hold the two outside buttons (,), HomeLink® Channel 1 and Channel 3, until the indicator light begins to flash (after 10 seconds). Release both buttons. Do not hold the buttons for longer than 20 seconds.

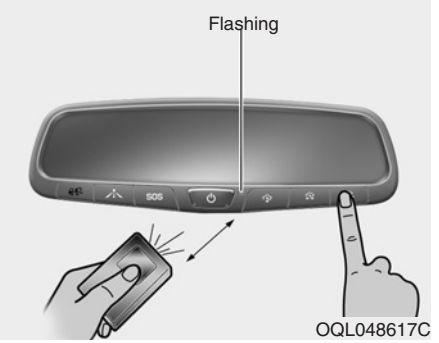

2. Position the end of your hand-held transmitter 1-3 inches (2-8 cm) away from the HomeLink® button you wish to program while keeping the indicator light in view.
3. Simultaneously press and hold both the HomeLink® and hand-held transmitter buttons until the HomeLink® indicator light changes from a slow to a rapid blinking light. Now you may release both the HomeLink® and hand-held transmitter buttons.

✻ NOTICE

Some devices may require you to replace this Programming step 3 with procedures noted in the "Gate Operator/Canadian Programming" chapter. If the HomeLink® indicator light does not change to a rapidly blinking light after performing these steps, contact HomeLink® at www.homelink.com.

4. Firmly press, hold for 5 seconds and release the programmed HomeLink® button up to two separate times to activate the door. If the door does not activate, press and hold the just-trained HomeLink® button and observe the indicator light.
   - If the indicator light stays on constantly, programming is complete and your device should activate when the HomeLink® button is pressed and released.
   - If the indicator light blinks rapidly for 2 seconds and then turns to a constant light, continue with "Programming" steps 5-7 to complete the programming of a rolling code equipped device (most commonly a garage door opener).
5. At the garage door opener receiver (motor-head unit) in the garage, locate the "learn" or "smart" button. This can usually be found where the hanging antenna wire is attached to the motor-head unit.
6. Firmly press and release the "learn" or "smart" button. (The name and color of the button vary by manufacturer). There are 30 seconds to initiate step 7.
7. Return to the vehicle and firmly press, hold for 2 seconds and release the programmed HomeLink® button. Repeat the "press/hold/release" sequence a second time, and, depending on the brand of the garage door opener (or other rolling code equipped device), repeat this sequence a third time to complete the programming process.

HomeLink® should now activate your rolling code equipped device.

Gate operator & Canadian programming

During programming, your handheld transmitter may automatically stop transmitting. Continue to press the Integrated HomeLink® Wireless Control System button (note steps 2 through 3 in the Programming portion of this document) while you press and re-press ("cycle") your handheld transmitter every two seconds until the frequency signal has been learned. The indicator light will flash slowly and then rapidly after several seconds upon successful training.

Operating HomeLink®

To operate, simply press and release the programmed HomeLink® button. Activation will now occur for the trained device (i.e. garage door opener, gate operator, security system, entry door lock, home/office lighting, etc.). For convenience, the hand-held transmitter of the device may also be used at any time.

Reprogramming a single HomeLink® button

To program a device to HomeLink® using a HomeLink® button previously trained, follow these steps:

1. Press and hold the desired HomeLink® button. DO NOT release the button.
2. The indicator light will begin to flash after 20 seconds. Without releasing the HomeLink® button, proceed with "Programming" step 2.

For questions or comments, contact HomeLink® at www.homelink.com or 1-800-355-3515.

Erasing HomeLink® buttons

Individual buttons cannot be erased. However, to erase all three programmed buttons:

1. Press and hold the two outer HomeLink® buttons until the indicator light begins to flash after 10 seconds.
2. Release both buttons. Do not hold for longer than 20 seconds.

The Integrated HomeLink® Wireless Control System is now in the training (learn) mode and can be programmed at any time following the appropriate steps in the Programming chapters above.

NVS® is a registered trademark and Z-Nav™ is a trademark of the Gentex Corporation, Zeeland, Michigan. HomeLink® is a registered trademark owned by Johnson Controls, Incorporated, Milwaukee, Wisconsin.

FCC ID: NZLZTVHL3

IC: 4112A-ZTVHL3

This device complies with Industry Canada licence-exempt RSS standard(s).

Operation is subject to the following two conditions:

(1) This device may not cause interference, and

(2) This device must accept any interference, including interference that may cause undesired operation of the device.

Outside rearview mirror

Be sure to adjust the mirror angles before driving.

Your vehicle is equipped with both left-hand and right-hand outside rearview mirrors. The mirrors can be adjusted remotely with the remote switch. The mirror heads can be folded back to prevent damage during an automatic vehicle wash or when passing through a narrow street.

The right outside rearview mirror is convex. Objects seen in the mirror are closer than they appear.

Use your interior rearview mirror or direct observation to determine the actual distance of following vehicles when changing lanes.

⚠ CAUTION - Rearview mirror

Do not scrape ice off the mirror face; this may damage the surface of the glass. If ice should restrict the movement of the mirror, do not force the mirror for adjustment. To remove ice, use a deicer spray, or a sponge or soft cloth with very warm water.

If the mirror is jammed with ice, do not adjust the mirror by force. Use an approved spray de-icer (not radiator antifreeze) to release the frozen mechanism or move the vehicle to a warm place and allow the ice to melt.

⚠ WARNING - Mirror adjustment

Do not adjust or fold the outside rearview mirrors while the vehicle is moving. This could result in loss of control.

Adjusting outside rearview mirror (if equipped)

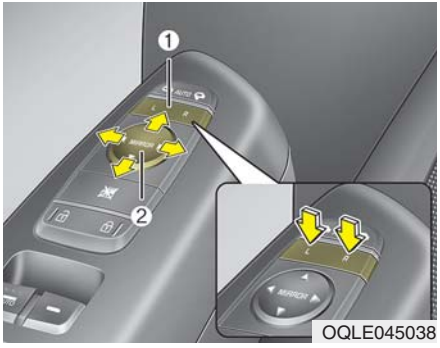

OQLE045038

The electric remote control mirror switch allows you to adjust the position of the left and right outside rearview mirrors. To adjust the position of either mirror, press the R or L button (1) to select the right side mirror or the left side mirror, then press a corresponding point (▲) on the mirror adjustment control to position the selected mirror up, down, left or right.

After adjustment, put the button into neutral(center) position to prevent inadvertent adjustment.

⚠ CAUTION - Outside mirror

- ***The mirrors stop moving when they reach the maximum adjusting angles, but the motor continues to operate while the switch is pressed.***

  Do not press the switch longer than necessary, the motor may be damaged.
- ***Do not attempt to adjust the outside rearview mirror by hand. Doing so may damage the parts.***

Folding the outside rearview mirror (if equipped)

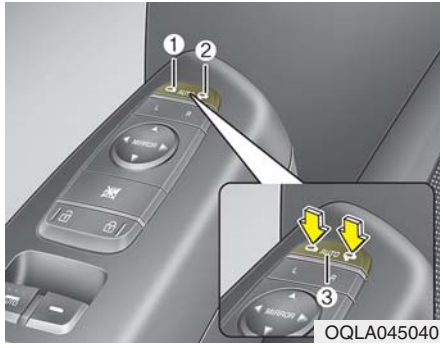

Electric type

The outside rearview mirror can be folded or unfolded by pressing the switch when the ignition switch is ACC or ON position as below.

Left (1) : The mirror will unfold.

Right (2) : The mirror will fold.

Center (AUTO, 3) :

The mirror will fold or unfold automatically as follows:

- The mirror will fold or unfold when the door is locked or unlocked by the folding key or smart key.
- The mirror will fold or unfold when the door is locked or unlocked by the button on the outside door handle.
- The mirror will unfold when you approach the vehicle (all doors closed and locked) with a smart key in possession. (if equipped)

⚠ **CAUTION - Electric type outside rearview mirror**

The electric type outside rearview mirror operates even though the engine start/stop button is in the OFF position. However, to prevent unnecessary battery discharge, do not adjust the mirrors longer than necessary while the engine is not running.

In case it is an electric type outside rearview mirror, don't fold it by hand. It could cause motor failure.

Manual type

To fold the outside rearview mirror, grasp the housing of the mirror and then fold it toward the rear of the vehicle.

INSTRUMENT CLUSTER

■ **Type A**

■ **Type B**

1. Tachometer
2. Speedometer
3. Engine coolant temperature gauge
4. Fuel gauge
5. LCD display
6. Warning and indicator lights

❊ The actual cluster in the vehicle may differ from the illustration.
For more details, refer to the "Gauges" in this chapter.

OQL048192C/OQL048193C

Instrument Cluster Control

Adjusting Instrument Cluster Illumination

The brightness of the instrument panel illumination is changed by pressing the illumination control button (“+” or “-”) when the ignition switch or Engine Start/Stop button is ON, or the taillights are turned on.

- If you hold the illumination control button (“+” or “-”), the brightness will be changed continuously.
- If the brightness reaches to the maximum or minimum level, an alarm will sound.

LCD Display Control

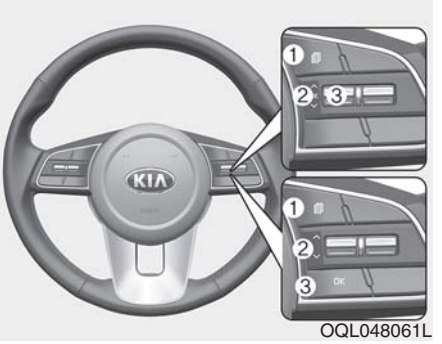

The LCD display modes can be changed by using the control buttons on the steering wheel.

(1) 🗐 : MODE button for change the LCD MODES

(2) ∧/∨ : MOVE scroll switch for select the items

(3) OK : SET/RESET button for set the items or reset the items

❊ For the LCD modes, refer to “LCD Display” in this chapter.

Gauges

Speedometer

OQL045184C

The speedometer indicates the speed of the vehicle and is calibrated in miles per hour (mph) and/or kilometers per hour (km/h).

Tachometer

OQL048183L

The tachometer indicates the approximate number of engine revolutions per minute (rpm).

Use the tachometer to select the correct shift points and to prevent lugging and/or over-revving the engine.

⚠ **CAUTION - Red zone**

Do not operate the engine within the tachometer's RED ZONE. This may cause severe engine damage.

Engine Coolant Temperature Gauge

OQL048230L

This gauge indicates the temperature of the engine coolant when the ignition switch or Engine Start/Stop button is ON.

If the gauge pointer moves beyond the normal range area toward the "H" position, it indicates overheating that may damage the engine.

Do not continue driving with an overheated engine. If your vehicle overheats, refer to “If the Engine Overheats” in chapter 7.

⚠ WARNING - Hot radiator

Never remove the radiator cap when the engine is hot. The engine coolant is under pressure and could cause severe burns. Wait until the engine is cool before adding coolant to the reservoir.

Fuel Gauge

This gauge indicates the approximate amount of fuel remaining in the fuel tank.

✻ NOTICE

- **The fuel tank capacity is given in chapter 9.**
- **The fuel gauge is supplemented by a low fuel warning light which will illuminate when the fuel tank is nearly empty.**
- **On inclines or curves, the fuel gauge pointer may fluctuate or the low fuel warning light may come on earlier than usual due to the movement of fuel in the tank.**

⚠ WARNING - Fuel gauge

Stop and obtain additional fuel as soon as possible after the warning light comes on or when the gauge indicator comes close to the E level. Running out of fuel can expose vehicle occupants to danger.

⚠ CAUTION - Low fuel

Avoid driving with an extremely low fuel level. Running out of fuel could cause the engine to misfire damaging the catalytic converter.

✻ NOTICE

Fuel display may not be accurate if you are filling in sloping places.

Odometer

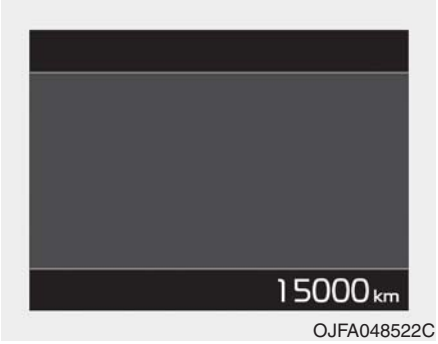

OJFA048522C

The odometer Indicates the total distance that the vehicle has been driven and should be used to determine when periodic maintenance should be performed.

- Odometer range : 1,599,999 km or 0 ~ 999,999 miles.

Outside Temperature Gauge

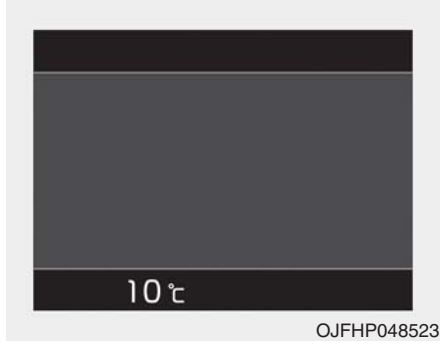

OJFHP048523

This gauge indicates the current outside air temperatures by 1°C (1°F).

- Temperature range : -40°C ~ 60°C (-40°F ~ 140°F)

The outside temperature on the display may not change immediately like a general thermometer to prevent the driver from being distracted.

To change the temperature unit (from °C to °F or from °F to °C)

The temperature unit can be changed by using the "User Settings" mode of the LCD display.

❈ For more details, refer to “LCD Display” in this chapter.

Transmission Shift Indicator

Automatic Transmission Shift Indicator

OJF048524

This indicator displays which automatic transmission shift lever is selected.

- Park : P
- Reverse : R
- Neutral : N
- Drive : D
- Sports Mode : 1, 2, 3, 4, 5, 6

LCD DISPLAY (IF EQUIPPED)

LCD Modes

Modes	Symbol	Explanation
Trip Computer		This mode displays driving information such as the tripmeter, fuel economy, and so on. ❊ For more details, refer to “Trip Computer” in this chapter
Turn by Turn mode (if equipped)		This mode displays the state of the navigation.
Assist mode (if equipped)		This mode displays the state of below systems. - SCC with S&G (Refer to “Smart Cruise Control with Stop & Go system” in chapter 5) - Lane Keeping Assist (Refer to “Lane keeping Assist (LKA) system” in chapter 5) - Driving Attention Warning (Refer to “Driving Attention Warning (DAW) system” in chapter 5) - Tire Pressure(Refer to “Tire Pressure Monitoring System (TPMS)” in chapter 6) ❊ For more details, refer to chapter 5 and 6.
User Settings		On this mode, you can change settings of the doors, lamps and so on.
ESC (if equipped)		This mode displays the state of the ESC. ❊ For more details, refer to chapter 5.
Master warning mode		This mode informs of warning messages related to malfunction of Blind-spot Collision Warning and so on.

❊ For controlling the LCD modes, refer to "LCD Display Control" in this chapter.

Trip computer mode

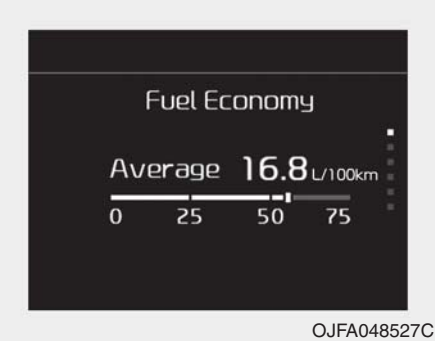

OJFA048527C

This mode displays driving information like the tripmeter, fuel economy, and so on.

❊ For more details, refer to “Trip Computer” in this chapter.

Turn By Turn mode (if equipped)

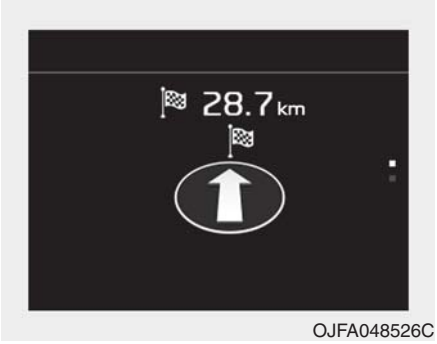

OJFA048526C

This mode displays the state of the navigation.

Assist mode (if equipped)

■ SCC with S&G

OQL058283C

■ LKA

OQL058242L

■ DAW

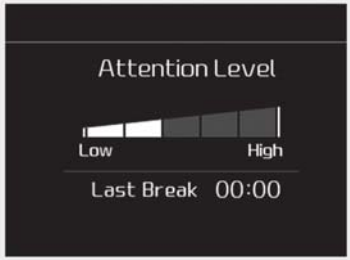

OJF048552L

■ TPMS

OQL048260L

Assist mode displays the state of below systems.

- SCC with S&G(if equipped)
- Lane Keeping Assist(if equipped)
- Driver Attention Warning (if equipped)
- Tire Pressure (if equipped)

Service mode

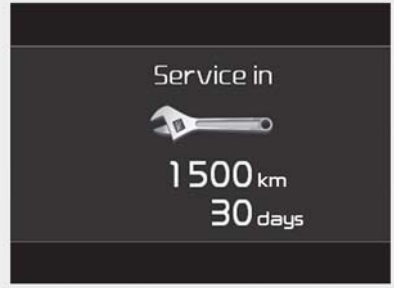

OJFA048529C

When Service Required is set, the remaining distance/time before service is required appears on the LCD screen.

From the point at which the remaining distance to drive amounts to 1,500 km (900 mi) or the remaining time amounts to 30 days, The Service Required message automatically displays and remains on the LCD screen for a number of seconds every time the ignition switch or Engine Start/Stop Button is ON.

When Service Required is set a Service Required Alarm message pops up when an aggregated amount of miles/time driven reaches a certain point.

With Service Required mode, press OK button for more than 1 sec. The values will return to initial setting values.

❊For more details about Service Required Setting refer to user Settings Mode in this chapter.

❊Service Required Setting

In the event of Battery Cable Disconnection or Fuse Switch turned OFF, the Service Required Setting values (an amount of miles/time driven) may change. In such cases, re-enter Service Required Setting values.

Master warning mode (if equipped)

- This warning light informs the driver of the following situations
- LED head lamp malfunction (if equipped)
- Smart Cruise Control with Stop & Go malfunction (if equipped)
- Smart Cruise Control with Stop & Go radar blind (if equipped)
- Forward Collision-Avoidance Assist malfunction (if equipped)
- Blind-Spot Collision Warning radar blind (if equipped)
- Lamp malfunction
- High Beam Assist malfunction (if equipped)
- Tire Pressure Monitoring System (TPMS) malfunction (if equipped)

The Master Warning Light illuminates if one or more of the above warning situations occur.

If the warning situation is solved, the master warning light will be turned off.

User Settings Mode

Description

OJF048553L

On this mode, you can change setting of the doors, lamps, and so on.

⚠ WARNING

Do not adjust the User Setting while driving.

You may lose your steering control which could cause an accident and bodily injury.

Shift to P to edit settings

OJF048554L

This warning message appears if you try to adjust the User Settings while driving.

For your safety, change the User Settings after parking the vehicle, applying the parking brake and moving the shift lever to P (Park).

Driver Assistance (if equipped)

- SCC Reaction (if equipped) :
  - Choose the sensitivity (fast, normal, slow) of the smart cruise control.

❊For more details, refer to “Smart Cruise Control with Stop & Go” in chapter 5.

- Driver Attention Warning (if equipped) :
  - Choose the alert stage (High sensitivity/Normal sensitivity/Off) of the Driver Attention Warning.

❊For more details, refer to “Driver Attention Warning (DAW)” in chapter 5.

- Lane Safety (if equipped) :
  - Active LKA : To activate the active LKA mode.
  - Lane Keeping Assist : To activate the Lane Keeping Assist mode.
  - Lane Departure Warning : To activate the lane departure warning function.

❊For more details, refer to “Lane Keeping Assist (LKA) System” in chapter 5.

- Forward Collision-avoidance Assist (FCA,if equipped) :
  - To activate or deactivate the FCA system.

❊For more details, refer to “Forward Collision-avoidance Assist (FCA)” in chapter 5.

- Forward Collision Warning (if equipped) :
  - Choose the inital warning alert time of the forward collision warning. (Fast/Normal/Slow)

❊For more details, refer to “Forward Collision-avoidance Assist (FCA)” in chapter 5.

- Rear Cross-Traffic Collision Warning (if equipped) :
  - If this item is checked, the rear cross-traffic collision Warning function will be activated.

❊For more details, refer to “Blind-spot Collision Warning” in chapter 5

- Blind-Spot Collision Warning Sound (if equipped) :
  - If this item is checked, the BCW sound function will be activated.

Door

- Auto Lock :
  - Enable on Speed : All doors will be automatically locked when the vehicle speed exceeds 15 km/h (9.3 mph).
  - Enable on Shift : All doors will be automatically locked if the transmission shift lever is shifted from the P (Park) position to the R (Reverse), N (Neutral), or D (Drive) position.
- Auto Unlock :
  - Disable : The auto door unlock operation will be canceled.
  - Vehicle Off/On key out : All doors will be automatically unlocked when the ignition key is removed from the ignition switch or the Engine Start/Stop button is set to the OFF position.
  - On Shift to P : All doors will be automatically unlocked if the automatic transmission shift lever is shifted to the P (Park) position.
- Two Press Unlock (if equipped) :
  - If this item is checked, the two press unlock will be activated.
- Power Liftgate (if equipped) :
  - If this item is checked, the power liftgate function will be activated.

❊For more details, refer to “Power Liftgate” in this chapter.

- Smart Liftgate (if equipped) :
  - If this item is checked, the smart liftgate function will be activated.

❊For more details, refer to “Smart Liftgate” in this chapter.

Lights

- One Touch Turn Signal :
  - Off: The one touch turn signal function will be deactivated.
  - 3, 5, 7 Flashes : The lane change signals will blink 3, 5 or 7 times when the turn signal lever is moved slightly.

❊For more details, refer to “Lighting” in this chapter.

- Headlight Delay :
  - If this item is checked, the head lamp delay function will be activated.

❊For more details, refer to “Lighting” in this chapter.

Sound

- Cluster Voice Guidance Volume (if equipped) :
  - This used to set/adjust the voice guidance volume.
- Parking Distance Warning Volume (if equipped) :
  - Adjust the Park Assist System volume. (Level 1 ~ 3)
- Welcome Sound (if equipped) :
  - If this item is checked, the welcome sound function will be activated.

Convenience

- Welcome Mirror/Light (if equipped) :
  - If this item is checked, the welcome mirror/light function will be activated.
- Wireless Charging System (if equipped) :
  - If this is checked, the wireless charging system function will be activated.
- Wiper/Light Display (if equipped) :
  - If this item is checked, the wiper/light display will be activated.
- Auto rear wiper (in R) (if equipped) :
  - If this is checked, the rear wiper will automatically activated when the front wiper is in ON position and shift lever is in R (reverse) position.
- Gear Position Pop-up (if equipped) :
  - If this item is checked, the gear position pop-up display will be activated.
- Icy Road Warning (if equipped) :
  - If this item is checked, the icy road warning display will be activated.

Service interval

- Enable Service Interval :
  - To activate or deactivate the service interval function.
- Adjust Interval :
  - To adjust the interval by mileage and period.
- Reset :
  - To reset the service interval function.

Other

- Fuel Economy Reset :
  - If this item checked, the average fuel economy will reset automatically after refueling or after ignition.
- Speed Unit (if equipped) :
  - Choose the speed unit. (km, mi)
- Fuel Economy Unit :
  - Choose the fuel economy unit. (US gallon, UK gallon)
- Temperature Unit :
  - Choose the temperature unit. (°C,°F)
- Tire Pressure Unit (if equipped) :
  - Choose the tire pressure unit. (psi, kPa, bar)

Language (if equipped)

Choose the language.

Reset

You can reset the menus in the User Settings Mode. All menus in the User Settings Mode are initialized, except language and service interval.

TRIP MODES (TRIP COMPUTER)

The trip computer is a microcomputer-controlled driver information system that displays information related to driving.

✻ NOTICE

Some driving information stored in the trip computer (for example Average Vehicle Speed) resets if the battery is disconnected.

Trip Modes

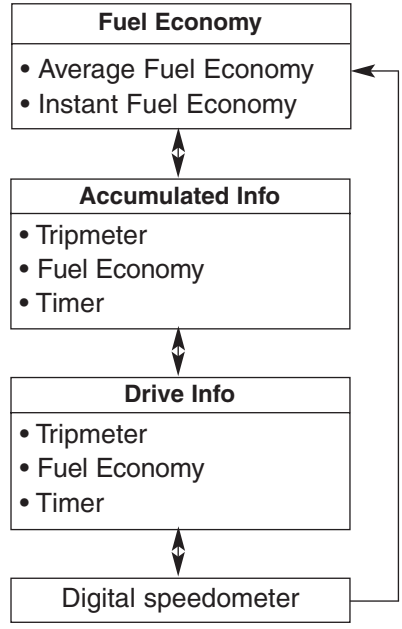

To change the trip mode, scroll the MOVE scroll switch (▲/▼) in the trip computer mode.

Fuel Economy

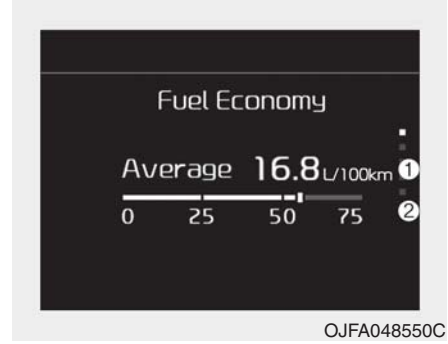

OJFA048550C

Average Fuel Economy (1)

- The average fuel economy is calculated by the total driving distance and fuel consumption since the last average fuel economy reset.
  - Fuel economy range : 0 ~ 99.9 L/100km or MPG
- The average fuel economy can be reset both manually and automatically.

✻ NOTICE

The fuel economy may vary significantly based on driving conditions, driving habits, and condition of the vehicle.

Manual reset

To reset average fuel economy manually, press the OK button (reset) on the steering wheel for more than 1 second when the average fuel economy is displayed.

Automatic reset

To make the average fuel economy reset automatically whenever refueling, select the “Auto Reset” mode in User Setting menu of the LCD display (Refer to “LCD Display”).

- OFF - You may set to default manually by using the trip switch reset button.
- After ignition - The vehicle will automatically set to default once 4 hours pass after the Ignition is in OFF.
- After refueling - After refueling more than 6 liters and driving over 1km/h, the vehicle will reset to default automatically.

✻ NOTICE

For a more accurate calculation of the average fuel economy, the vehicle must be continuously driven more than 10 seconds and 50 meters (0.03 miles).

Instant Fuel Economy (2)

- This mode displays the instant fuel economy during the last few seconds when the vehicle speed is more than 8 km/h (5 MPH).
  - Fuel economy range: 0 ~ 30 L/100km or 0 ~ 50 MPG

Accumulated driving information mode

OJFA048551C

Displays accumulated information starting from mileage/fuel efficiency/time default point.

- Accumulated information is calculated after the vehicle has run for more than 300 meters (0.2 miles).
- If you press “OK” button for more than 1 second after the Cumulative Information is displayed, the information will be reset.
- If the engine is running, even when the vehicle is not in motion, the information will be accumulated.

One time driving information mode

OJFA048552C

The vehicle will display Driving Information once per one ignition cycle.

- Fuel efficiency is calculated after the vehicle has run for more than 300 meters (0.2 miles).
- The Driving Information will be reset 4 hours after ignition has been turned off. So, when the vehicle ignition is turned on within 4 hours, the information will not be reset.

- If you press “OK” button for more than 1 second after the Driving Information is displayed, the information will be reset.
- If the engine is running, even when the vehicle is not in motion, the information will be accumulated.

Digital speedometer

This mode displays the current speed of the vehicle.

Warning Messages (if equipped)

Shift to P (for smart key system and automatic transmission)

- This warning message illuminates if you try to turn off the engine without the shift lever in P (Park) position.
- At this time, the Engine Start/Stop Button turns to the ACC position (If you press the Engine Start/Stop Button once more, it will turn to the ON position).

Low Key Battery (for smart key system)

- This warning message illuminates if the battery of the smart key is discharged when the Engine Start/Stop Button changes to the OFF position.

Press START button while turning wheel (for smart key system)

- This warning message illuminates if the steering wheel does not unlock normally when the Engine Start/Stop Button is pressed.
- It means that you should press the Engine Start/Stop Button while turning the steering wheel right and left.

Steering wheel not locked (for smart key system)

- This warning message illuminates if the steering wheel does not lock when the Engine Start/Stop Button changes to the OFF position.

Check Steering Wheel Lock System (for smart key system)

- This warning message illuminates if the steering wheel does not lock normally when the Engine Start/Stop Button changes to the OFF position.

Press brake pedal to start engine (for smart key system and automatic transmission)

- This warning message illuminates if the Engine Start/Stop Button changes to the ACC position twice by pressing the button repeatedly without depressing the brake pedal.
- It means that you should depress the brake pedal to start the engine.

Key not detected (for smart key system)

- This warning message illuminates if the smart key is not detected when you press the Engine Start/Stop Button.

Remove key (for smart key system)

- This warning message illuminates if the smart key is remove the holder.

Key not in vehicle (for smart key system)

- If the smart key is not in the vehicle and if any door is opened or closed with the engine start/stop button in ACC, ON, or START, the warning illuminates on the LCD display.

Press start button again (for smart key system)

- This warning message illuminates if you can not operate the Engine Start/Stop Button when there is a problem with the Engine Start/Stop Button system.
- It means that you could start the engine by pressing the Engine Start/ Stop Button once more.
- If the warning illuminates each time you press the Engine Start/Stop Button, have the vehicle inspected by a professional workshop. Kia recommends to visit an authorized Kia dealer/service partner.

Press start button with key (for smart key system)

- This warning message illuminates if you press the Engine Start/Stop Button while the warning message “Key not detected” is illuminating.
- At this time, the immobilizer indicator light blinks.

Check BRAKE SWITCH fuse (for smart key system and automatic transmission)

- This warning message illuminates if the brake switch fuse is disconnected.
- It means that you should replace the fuse with a new one. If that is not possible, you can start the engine by pressing the Engine Start/Stop Button for 10 seconds in the ACC position.

Shift to P or N to start engine (for smart key system and automatic transmission)

- This warning message illuminates if you try to start the engine with the shift lever not in the P (Park) or N (Neutral) position.

✻ NOTICE

You can start the engine with the shift lever in the N (Neutral) position. However, for your safety, we strongly recommend that you start the engine with the shift lever in the P (Park) position.

Press clutch pedal to start engine (for smart key system)

- This warning message illuminates if the Engine Start/Stop Button changes to the ACC position twice by pressing the button repeatedly without depressing the clutch pedal.
- It means that you should depress the clutch pedal to start the engine.

Press START button and shift to P (for smart key system)

- This warning message illuminates if you try to turned off engine with the shift lever in the N (Neutral) position. To shift to P(Park), the driver must first press the Start button once.

Door, Hood, Liftgate Open

OQL048263L

- It means that any door, hood, or tailgate is open.

Sunroof Open (if equipped)

OQL048264L

- This warning message illuminates if you turn off the engine and then open the driver's door when the sunroof is open.

Low Washer Fluid (if equipped)

- This warning message illuminates on the service reminder mode if the washer fluid level in the reservoir is nearly empty.
- It means that you should refill the washer fluid.

Turn on FUSE SWITCH (if equipped)

- This warning message illuminates if the fuse switch under the steering wheel is OFF.
- It means that you should turn the fuse switch on.

❊For more details, refer to “Fuses” in chapter 7.

Check DAW (Driver Attention Warning) system (if equipped)

This warning message is displayed if there is a problem with the Driver Attention Warning system. In this case, have your vehicle inspected by an authorized Kia dealer.

❊For more information, refer to “Driver Attention Warning (DAW)” in chapter 5.

Check BCW (Blind-spot Collision Warning) system (if equipped)

This warning message is displayed if there is a problem with the Blind-Spot Collision Warning (BCW) system. In this case, have your vehicle inspected by an authorized Kia dealer.

❊For more information, refer to “Blind-Spot Collision Warning (BCW)” in chapter 5.

Check FCA (Forward Collision Avoidance Asst.) (if equipped)

- This warning message illuminates if there is a malfunction with the Forward Collision Avoidance Assist (FCA) system. In this case, have your vehicle inspected by an authorized Kia dealer.

❊For more details, refer to “Forward Collision Avoidance Assist(FCA) system” in chapter 5.

Check high beam assist system (if equipped)

- This warning message illuminates if the high beam assist system has a malfunction.

In this case, have the vehicle inspected by a professional workshop. Have your vehicle inspected by an authorized Kia dealer.

Device in wireless charger (if equipped)

If a smart phone is still left on the wireless charging pad unattended, even when the ignition is in ACC OFF and the instrument panel's one time driving information mode has finished, a warning message will lit up on the instrument panel.

❊For more details, refer to “Smart Phone Wireless Charger” in this chapter.

Low Fuel

- This warning message illuminates if the fuel tank is nearly empty.
  - When the low fuel level warning light is illuminates.

  Add fuel as soon as possible.

Icy Road Warning (if equipped)

OJF048575L

This warning pop-up message and light are to warn the driver the road may be icy.

When the Outside Temperature is below approximately 4°C (39°F).

- The warning light (including Outside Temperature and unit) blinks 5 times and then illuminates.
- The warning pop-up message displays, and the warning chime sounds once at the same time only once for each ignition cycle.

❊If this item is checked in “User settings”, this function will be activated.

✻ NOTICE

If the icy road warning light appears while driving, you should drive more attentively and refrain from speeding, rapid acceleration, sudden braking or sharp turning.

WARNING AND INDICATOR LIGHTS

Warning lights

✻ NOTICE - Warning lights

Make sure that all warning lights are OFF after starting the engine. If any light is still ON, this indicates a situation that needs attention.

Air bag Warning Light

This warning light illuminates:

- Once you set the ignition switch or Engine Start/Stop Button to the ON position.
  - It illuminates for approximately 6 seconds and then goes off.
- When there is a malfunction with the SRS.

  Recommend you have your vehicle inspected by an authorized Kia dealer.

Seat Belt Warning Light

This warning light informs the driver that the seat belt is not fastened.

❊ For more details, refer to the “Seat Belts” in chapter 3.

Parking Brake & Brake Fluid Warning Light

This warning light illuminates:

- Once you set the ignition switch or Engine Start/Stop Button to the ON position.
  - It illuminates for approximately 3 seconds
- When the parking brake is applied, the warning light will remain on.
- When the brake fluid level in the reservoir is low.
  - If the warning light illuminates with the parking brake released, it indicates the brake fluid level in reservoir is low.

If the brake fluid level in the reservoir is low:

1. Drive carefully to the nearest safe location and stop your vehicle.
2. With the engine stopped, check the brake fluid level immediately and add fluid as required (For more details, refer to “Brake Fluid” in chapter 7).

Then check all brake components for fluid leaks. If any leaks in the brake system are still found, the warning light remains on, or the brakes do not operate properly, do not drive the vehicle.

In this case, have your vehicle towed to an authorized Kia dealer and inspected.

Dual-diagonal braking system

Your vehicle is equipped with dual-diagonal braking systems. This means you still have braking on two wheels even if one of the dual systems should fail.

With only one of the dual systems working, greater pedal pressure will be required to stop the vehicle.

Also, the vehicle will require increased stopping distance with only a portion of the brake system working.

If the brakes fail while you are driving, shift to a lower gear for additional engine braking and stop the vehicle as soon as it is safe to do so.

Driving the vehicle with a warning light ON is dangerous. If the Parking Brake & Brake Fluid Warning Light illuminate with the parking brake released, it indicates that the brake fluid level is low.

In this case, have your vehicle inspected by an authorized Kia dealer.

Anti-lock Brake System (ABS) Warning Light

This warning light illuminates:

- Once you set the ignition switch or Engine Start/Stop Button to the ON position.
  - It illuminates for approximately 3 seconds and then goes off.
- When there is a malfunction with the ABS the warning light will remain on. The braking system will be operational without the assistance of the anti-lock brake system.

  In this case, have your vehicle inspected by an authorized Kia dealer.

Electronic Brake force Distribution (EBD) System Warning Light

These two warning lights illuminate at the same time while driving:

- When the ABS and regular brake system may not work normally.

  In this case, have your vehicle inspected by an authorized Kia dealer.

⚠ WARNING - Electronic Brake force Distribution (EBD) System Warning Light

When both ABS and Parking Brake & Brake Fluid Warning Lights are on, the brake system will not work normally and you may experience an unexpected and dangerous situation during sudden braking thereby increasing the risk of a crash and injury. In this case, avoid high speed driving and abrupt braking. Have your vehicle inspected by an authorized Kia dealer as soon as possible.

✻ NOTICE - Electronic Brake force Distribution (EBD) System Warning Light

When the ABS Warning Light is on or both the ABS and the Parking Brake & Brake Fluid Warning Lights are on, the speedometer, odometer, or tripmeter may not work. Also, the EPS Warning Light may illuminate and the steering effort may increase or decrease.
In this case, have your vehicle inspected by an authorized Kia dealer as soon as possible.

Electronic Power Steering (EPS) Warning Light

This warning light illuminates:

- Once you set the ignition switch or Engine Start/Stop Button to the ON position.
  - It remains on until the engine is started.
- When there is a malfunction with the EPS.

  In this case, have your vehicle inspected by an authorized Kia dealer.

Malfunction Indicator Lamp (MIL)

This warning light illuminates:

- Once you set the ignition switch or Engine Start/Stop Button to the ON position.
  - It remains on until the engine is started.
- When there is a malfunction with the emission control system.

  In this case, have your vehicle inspected by an authorized Kia dealer.

⚠ **CAUTION - Malfunction Indicator Lamp (MIL)**

Driving with the Malfunction Indicator Lamp (MIL) on may cause damage to the emission control systems which could affect drivability and/or fuel economy.

⚠ **CAUTION - Catalytic Converter Damage**

If the Malfunction Indicator Lamp (MIL) illuminates, potential catalytic converter damage is possible which could result in loss of engine power.

In this case, have your vehicle inspected by an authorized Kia dealer as soon as possible.

Charging System Warning Light

This warning light illuminates:

- Once you set the ignition switch or Engine Start/Stop Button to the ON position.
  - It remains on until the engine is started.
- When there is a malfunction with either the alternator or electrical charging system.

If there is a malfunction with either the alternator or electrical charging system:

1. Drive carefully to the nearest safe location and stop your vehicle.
2. Turn the engine off and check the alternator drive belt for looseness or breakage.

   If the belt is adjusted properly, there may be a problem in the electrical charging system.

   In this case, have your vehicle inspected by an authorized Kia dealer as soon as possible.

Engine Oil Pressure Warning Light

This warning light illuminates:

- Once you set the ignition switch or Engine Start/Stop Button to the ON position.
  - It remains on until the engine is started.
- When the engine oil pressure is low.

If the engine oil pressure is low:

1. Drive carefully to the nearest safe location and stop your vehicle.
2. Turn the engine off and check the engine oil level (For more details, refer to “Engine Oil” in chapter 7). If the level is low, add oil as required.

   If the warning light remains on after adding oil or if oil is not available, have your vehicle inspected by an authorized Kia dealer as soon as possible.

⚠ CAUTION - Engine damage

If the engine is not stopped immediately after the engine oil pressure warning light is illuminated and stays on while the engine is running, serious engine damage may result.

⚠ CAUTION - Engine Overheating

Do not continue driving with the engine overheated. Otherwise, the engine may be damaged.

Low Tire Pressure Warning Light

This warning light illuminates:

- Once you set the ignition switch or Engine Start/Stop Button to the ON position.
  - It illuminates for approximately 3 seconds and then goes off.
- When one or more of your tires are significantly underinflated.

❊For more details, refer to “Tire Pressure Monitoring System (TPMS)” in chapter 6.

This warning light remains on after blinking for approximately 60 seconds or repeats blinking on and off at the intervals of approximately 3 seconds:

- When there is a malfunction with the TPMS.

  In this case, have your vehicle inspected by an authorized Kia dealer as soon as possible.

❊For more details, refer to “Tire Pressure Monitoring System (TPMS)” in chapter 6.

⚠ WARNING - Low tire pressure

- **Significantly low tire pressure makes the vehicle unstable and can contribute to loss of vehicle control and increased braking distances.**
- **Continued driving on low pressure tires will cause the tires to overheat and fail.**

⚠ WARNING

- **The TPMS cannot alert you to severe and sudden tire damage caused by external factors.**
- **If you notice any vehicle instability, immediately take your foot off the accelerator pedal, apply the brakes gradually with light force, and slowly move to a safe position off the road.**

Electronic Parking Brake (EPB) Warning Light (if equipped)

EPB

This warning light illuminates:

- Once you set the ignition switch or Engine Start/Stop Button to the ON position.
  - It illuminates for approximately 3 seconds and then goes off.
- When there is a malfunction with the EPB.

  In this case, have your vehicle inspected by an authorized Kia dealer.

✻ NOTICE - Electronic Parking Brake (EPB) Warning Light

The Electronic Parking Brake (EPB) Warning Light may illuminate when the Electronic Stability control (ESC) Indicator Light comes on to indicate that the ESC is not working properly (This does not indicate malfunction of the EPB).

Master Warning light

- This warning light informs the driver of the following situations
- LED head lamp malfunction (if equipped)
- Smart Cruise Control with Stop & Go malfunction (if equipped)
- Smart Cruise Control with Stop & Go radar blind (if equipped)
- Forward Collision-Avoidance Assist malfunction (if equipped)
- Blind-Spot Collision Warning radar blind (if equipped)
- Lamp malfunction
- High Beam Assist malfunction
- Tire Pressure Monitoring System (TPMS) (if equipped)

The Master Warning Light illuminates if one or more of the above warning situations occur.

If the warning situation is solved, the master warning light will be turned off.

Forward Collision-avoidance Assist Warning light (FCA, if equipped)

This indicator light illuminates:

- When there is a malfunction with the FCA.

In this case, have the vehicle inspected by an authorized Kia dealer.

All Wheel Drive (AWD) Warning Light

This indicator light illuminates:

- When there is a malfunction with the AWD system.

In this case, have the vehicle inspected by an authorized Kia dealer.

All Wheel Drive (AWD) LOCK Indicator Light

This indicator light illuminates:

- Once you set the ignition switch or Engine Start/Stop Button to the ON position.
  - It illuminates for approximately 3 seconds and then goes off.
- When you select AWD Lock mode by pressing the AWD LOCK button.
  - The AWD LOCK mode is to increase the drive power when driving on wet pavement, snow covered roads and/or off-road.

⚠ CAUTION - AWD Lock Mode

Do not use AWD LOCK mode on dry paved roads or highway, it can cause noise, vibration or damage of AWD related parts.

LED Headlamp Warning Light (if equipped)

This warning light illuminates:

- Once you set the ignition switch or Engine Start/Stop Button to the ON position.
  - It illuminates for approximately 3 seconds and then goes off.
- When there is a malfunction with the LED headlamp.

In this case, have your vehicle inspected by an authorized Kia dealer.

This warning light blinks:

- When there is a malfunction with a LED headlamp related part.

In this case, have your vehicle inspected by an authorized Kia dealer.

⚠ CAUTION - LED Headlamp Warning Light

Continuous driving with the LED Headlamp Warning Light on or blinking can reduce LED headlamp (low beam) life.

Indicator Lights

Electronic Stability Control (ESC) Indicator Light

This indicator light illuminates:

- Once you set the ignition switch or Engine Start/Stop Button to the ON position.
  - It illuminates for approximately 3 seconds and then goes off.
- When there is a malfunction with the ESC system.

  In this case, have your vehicle inspected by an authorized Kia dealer.

This indicator light blinks:

While the ESC is operating.

❊For more details, refer to "Electronic Stability Control (ESC)" in chapter 5.

Electronic Stability Control (ESC) OFF Indicator Light

This indicator light illuminates:

- Once you set the ignition switch or Engine Start/Stop Button to the ON position.
  - It illuminates for approximately 3 seconds and then goes off.
- When you deactivate the ESC system by pressing the ESC OFF button.

❊For more details, refer to "Electronic Stability Control (ESC)" in chapter 5.

Immobilizer Indicator Light (Without Smart Key)

This indicator light illuminates:

- When the vehicle detects the immobilizer in your key properly while the ignition switch is ON.
  - At this time, you can start the engine.
  - The indicator light goes off after starting the engine.

This indicator light blinks:

- When there is a malfunction with the immobilizer system.

  In this case, have your vehicle inspected by an authorized Kia dealer.

Immobilizer Indicator Light (With Smart Key)

This indicator light illuminates for up to 30 seconds:

- When the vehicle detects the smart key in the vehicle properly while the Engine Start/Stop Button is ACC or ON.
  - At this time, you can start the engine.
  - The indicator light goes off after starting the engine.

This indicator light blinks for a few seconds:

- When the smart key is not in the vehicle.
  - At this time, you can not start the engine.

This indicator light illuminates for 2 seconds and goes off:

- When the vehicle can not detect the smart key which is in the vehicle while the Engine Start/Stop Button is ON.

  In this case, have your vehicle inspected by an authorized Kia dealer.

This indicator light blinks:

- When the battery of the smart key is weak.
  - At this time, you can not start the engine. However, you can start the engine if you press the Engine Start/Stop Button with the smart key. (For more details, refer to “Starting the Engine” in chapter 5).
- When there is a malfunction with the immobilizer system.

  In this case, have your vehicle inspected by an authorized Kia dealer.

Turn Signal Indicator Light

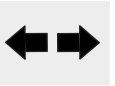

This indicator light blinks:

- When you turn the turn signal light on.

If any of the following occurs, there may be a malfunction with the turn signal system. In this case, have your vehicle inspected by an authorized Kia dealer.

- The indicator light does not blink but illuminates.
- The indicator light blinks more rapidly.
- The indicator light does not illuminate at all.

High Beam Indicator Light

This indicator light illuminates:

- When the headlights are on and in the high beam position
- When the turn signal lever is pulled into the Flash-to-Pass position.

High beam assist indicator (if equipped)

This warning light illuminates :

- When the high-Beam is on with the light switch in the AUTO light position.
- If your vehicle detects oncoming or preceding vehicles, the High beam assist system will switch the high beam to low beam automatically.

❊For more details, refer to "High beam assist" in this chapter.

Front Fog Indicator Light (if equipped)

This indicator light illuminates:

- When the front fog lights are on.

Light ON Indicator Light

This indicator light illuminates:

- When the tail lights or headlights are on.

AUTO HOLD Indicator Light (if equipped)

AUTO HOLD

This indicator light illuminates:

- [White] When you activate the auto hold system by pressing the AUTO HOLD button.
- [Green] When you stop the vehicle completely by depressing the brake pedal with the auto hold system activated.
- [Yellow] When there is a malfunction with the auto hold system.

  In this case, have your vehicle inspected by an authorized Kia dealer.

❊For more details, refer to “Auto Hold” in chapter 5.

LKA (Lane Keeping Assist) System Indicator (if equipped)

This indicator light illuminates :

- When you turn the lane keeping assistant system on by pressing the LKA button.

  If there is a problem with the system, the yellow LKA indicator will illuminate.

❊For more details, refer to “Lane Keeping Assist (LKA) System” in chapter 5.

⚠ WARNING - Distracted driving

Driving while distracted can result in a loss of vehicle control that may lead to an accident, severe personal injury, and death. The driver’s primary responsibility is in the safe and legal operation of a vehicle, and use of any handheld devices, other equipment, or vehicle systems which take the driver’s eyes, attention and focus away from the safe operation of a vehicle or which are not permissible by law should never be used during operation of the vehicle.

ECO Indicator Light (if equipped)

This indicator light illuminates :

- When the Active ECO system is activated by pressing the DRIVE mode button.
- The ECO indicator (green) will illuminate to show that the Active ECO is operating.

❊For more details, refer to “Drive Mode Integrated Control System" in chapter 5.

SPORT Mode Indicator Light (if equipped)

This indicator light illuminates:

- When you select “SPORT” mode as drive mode.

❊For more details, refer to “Drive Mode Integrated Control System” in chapter 5.

Downhill Brake Control (DBC) Indicator Light

This warning light illuminates:

- Once you set the ignition switch or Engine Start/Stop Button to the ON position.
  - It illuminates for approximately 3 seconds and then goes off.
- When you activate the DBC system by pressing the DBC button.

This warning light blinks:

- When the DBC is operating.

This warning light illuminates yellow:

- When there is a malfunction with the DBC system.

  In this case, have your vehicle inspected by an authorized Kia dealer.

❊For more details, refer to “Downhill Brake Control (DBC) System” in chapter 5.

REAR VIEW MONITOR (RVM)

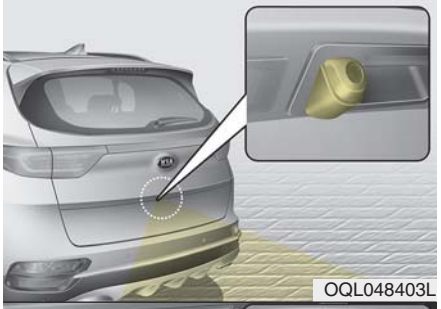

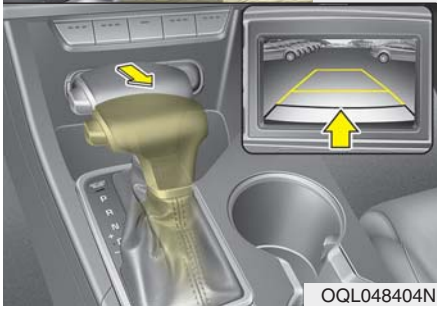

Rear View Monitor will activate with the ignition switch or ENGINE START/STOP button in the ON and the shift lever in the R (Reverse) position.

The rear view monitor may be turned off by pressing the ON/OFF button when the rear view monitor is activated.

To turn the camera on again, press the ON/OFF button again when the ignition switch is on and the shift lever is in R (Reverse). Also, the camera will turn on automatically whenever the ignition switch is turned off and on again.

- This system is a supplementary function only. It is the responsibility of the driver to always check the inside/outside rearview mirrors and the area behind the vehicle before and while backing up because there is a dead zone that can't be seen by the camera.
- Always keep the camera lens clean. If lens is covered with foreign matter, the camera may not operate normally.

❊ If your vehicle is equipped with an Infotainment System, rearview display will show through the Infotainment System, monitor while backing-up. Refer to a separately supplied manual for detailed information.

⚠ WARNING - Backing up & using camera

Never rely solely on the rear view camera when backing. You must always use methods of viewing the area behind you including looking over both shoulders as well as continuously checking all three rear view mirrors. Due to the difficulty of ensuring that the area behind you remains clear, always back slowly and stop immediately if you even suspect .

This system is a supplemental system that shows behind the vehicle through the rearview display mirror while backing up. If the vehicle is equipped with a navigation system, then the system will display on the screen.

REVERSE PARKING DISTANCE WARNING (PDW) (IF EQUIPPED)

OQL048084

Reverse Parking Distance Warning assists the driver during backward movement of the vehicle by chiming if any object is sensed within a distance of 120 cm (47 in.) behind the vehicle.

This system is a supplemental system and it is not intended to nor does it replace the need for extreme care and attention of the driver. The sensing range and objects detectable by the back sensors (①) are limited. Whenever backing-up, pay as much attention to what is behind you as you would in a vehicle without Reverse Parking Distance Warning.

⚠ WARNING

- Reverse Parking Distance Warning

Never rely solely on Reverse Parking Distance Warning. Always perform a visual inspection to make sure the vehicle is clear of all obstructions before moving the vehicle in any direction. Stop immediately if you are aware of a child anywhere near your vehicle. Some objects may not be detected by the sensors, due to the object's size or material.

Operation of Reverse Parking Distance Warning

Operating condition

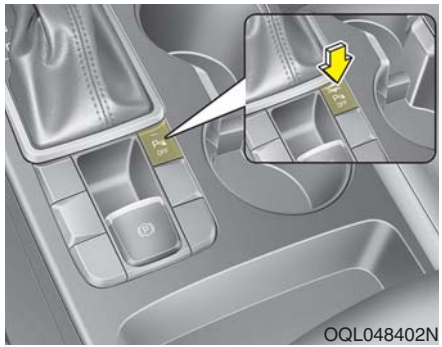
OQL048402N

- This system will activate when the indicator on the Reverse Parking Distance Warning system OFF button is not illuminated. If you desire to deactivate Reverse Parking Distance Warning, press the Parking Safety button again. (The indicator on the button will illuminate.) To turn the system on, press the button again. (The indicator on the button will go off.)

- This system will activate when backing up with the ignition switch ON.

  If the vehicle is moving at a speed over 5 km/h (3 mph), the system may not be activated correctly.
- The sensing distance while the back-up warning system is in operation is approximately 120 cm (47 in.) at the rear bumper center area, 60 cm (23.5 in.) at the rear bumper both side area.
- If vehicle speed exceeds 10 km/h (6 mph), the system will not warn you even though objects are detected.
- When more than two objects are sensed at the same time, the closest one will be recognized first.

Types of warning sound	Indicator*
When an object is 60 cm to 120 cm (24 in. to 48 in.) from the rear bumper: Buzzer beeps intermittently.	
When an object is 60 cm to 30 cm (12 in. to 24 in.) from the rear bumper: Buzzer beeps more frequently.	
When an object is within 30 cm (12 in.) of the rear bumper: Buzzer sounds continuously.	

* if equipped

Non-operational conditions of Reverse Parking Distance Warning

Reverse Parking Distance Warning may not operate properly when:

1. Moisture is frozen to the sensor. (It will operate normally once the moisture clears.
2. The sensor is covered with foreign matter, such as snow or water, or the sensor cover is blocked. (It will operate normally when the material is removed or the sensor is no longer blocked.)
3. Driving on uneven road surfaces (unpaved roads, gravel, bumps, gradient).
4. Objects generating excessive noise (vehicle horns, loud motorcycle engines, or truck air brakes) are within range of the sensor.
5. The weather conditions produce heavy rain or water spray.

6. Wireless transmitters or mobile phones are within range of the sensor.
7. The sensor is covered with snow.
8. Trailer towing

The detecting range may decrease when:

1. The sensor is covered with foreign matter such as snow or water. (The sensing range will return to normal when removed.)
2. Outside air temperature is extremely hot or cold.

The following objects may not be recognized by the sensor:

1. Sharp or slim objects such as ropes, chains or small poles.
2. Objects which tend to absorb the sensor frequency such as clothes, sound absorbent material or snow.
3. Undetectable objects smaller than 100 cm (40 in.) in height and narrower than 14 cm (6 in.) in diameter.

Reverse Parking Distance Warning precautions

- Reverse Parking Distance Warning may not sound consistently depending on the speed and shapes of the objects detected.
- Reverse Parking Distance Warning may malfunction if the vehicle bumper height or sensor installation has been modified or damaged. Any non-factory installed equipment or accessories may also interfere with the sensor performance.
- The sensor may not recognize objects less than 30 cm (12 in.) from the sensor, or it may sense an incorrect distance. Use caution.
- When the sensor is frozen or covered with snow, dirt, or water, the sensor may be inoperative until the material is removed using a soft cloth.
- To prevent damage, do not push, scratch or strike the sensor.

✻ NOTICE

This system can only sense objects within the range and location of the sensors. It cannot detect objects in other areas where sensors are not installed. Also, small or slim objects, such as poles or objects located between sensors may not be detected by the sensors.
Always visually check behind the vehicle when backing up.
Be sure to inform any drivers of the vehicle that may be unfamiliar with the system regarding the systems capabilities and limitations.

Self-diagnosis

If you don't hear an audible warning sound or if the buzzer sounds intermittently when shifting the gear to the R (Reverse) position, this may indicate a malfunction in Reverse Parking Distance Warning. If this occurs, have your vehicle checked by an authorized Kia dealer as soon as possible.

✻ NOTICE

Your new vehicle warranty does not cover any accidents or damage to the vehicle or injuries to its occupants due to Reverse Parking Distance Warning malfunction. Always drive safely and cautiously.

FORWARD/REVERSE PARKING DISTANCE WARNING (PDW) (IF EQUIPPED)

■ Rear

OQL048084

■ Front

OQL048085

Parking Distance Warning assists the driver during movement of the vehicle by chiming if any object is sensed within the distance of 100 cm (39 in.) in front and 120 cm (47 in.) behind the vehicle.

This system is a supplemental system and it is not intended to nor does it replace the need for extreme care and attention of the driver.

The sensing range and objects detectable by the sensors (①) are limited. Whenever moving pay as much attention to what is in front and behind of you as you would in a vehicle without Parking Distance Warning system.

⚠ WARNING

Parking Distance Warning system is a supplementary function only.

The operation of Parking Distance Warning system can be affected by several factors (including environmental conditions).

It is the responsibility of the driver to always check the front and rear views before and while parking.

Operation of the Parking Distance Warning

Operating condition

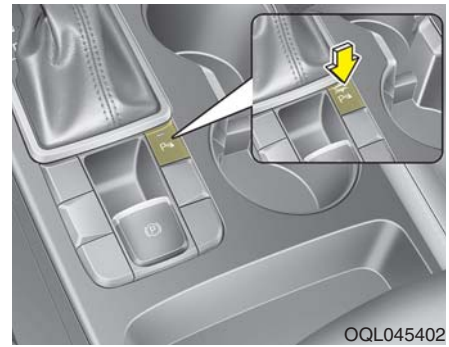

OQL045402

- This system activates when the Parking Safety button is pressed with the ignition switch or ENGINE START/STOP button in the ON.
- The indicator of the Parking Safety button turns on automatically and activates Forward/Reverse Parking Distance Warning when you shift the gear to the R (Reverse) position. It will turn off automatically when you drive above 30 km/h (18.6 mph).

- The sensing distance while backing up is approximately 120 cm (47 in). when you are driving less than 10 km/h (6.2 mph).
- The sensing distance while moving forward is approximately 100 cm (39 in.) when you are driving less than 10 km/h (6.2 mph).
- When more than two objects are sensed at the same time, the closest one will be recognized first.
- The side sensors are activated when you shift the gear to the R (Reverse) position.
- If the vehicle speed is above 20 km/h (12.4 mph), the system automatically turns off. To activate again, push the button.

Type of warning indicator and sound

: with Warning sound

Distance from object		Warning indicator		Warning sound
		When driving forward	When driving rearward	
60 ~ 100 cm (24 ~ 40 in.)	Front		-	Buzzer beeps intermittently
60 ~ 120 cm (24 ~ 48 in.)	Rear	-		Buzzer beeps intermittently
30 ~ 60 cm (12 ~ 24 in.)	Front			Buzzer beeps frequently
	Rear	-		Buzzer beeps frequently
30 cm (12 in.)	Front			Buzzer sounds continuously
	Rear	-		Buzzer sounds continuously

✻ NOTICE

- **The actual warning sound and indicator may differ from the illustration according to objects or sensor status.**
- **Do not wash the vehicle's sensor with high pressure water.**

✻ NOTICE

- **This system can only sense objects within the range and location of the sensors. It cannot detect objects in other areas where sensors are not installed. Also, small or slim objects, such as poles or objects located between sensors may not be detected by the sensors. Always visually check behind the vehicle when backing up.**
- **Be sure to inform any drivers of the vehicle that may be unfamiliar with the system regarding the systems capabilities and limitations.**

Non-operational conditions of Parking Distance Warning

Parking Distance Warning may not operate normally when:

1. Moisture is frozen to the sensor. (It will operate normally when moisture melts.)
2. Sensor is covered with foreign matter, such as snow or water, or the sensor cover is blocked. (It will operate normally when the material is removed or the sensor is no longer blocked.)
3. Sensor is stained with foreign matter such as snow or water. (Sensing range will return to normal when Cleaned.)
4. The Parking Distance Warning system button is off.

There is a possibility of Parking Distance Warning malfunction when:

1. Driving on uneven road surfaces such as unpaved roads, gravel, bumps, or gradient.
2. Objects generating excessive noise such as vehicle horns, loud motorcycle engines, or truck air brakes can interfere with the sensor.
3. The weather conditions produce heavy rain or water spray
4. Wireless transmitters or mobile phones are present near the sensor.
5. Sensor is covered with snow.

Detecting range may decrease when:

1. Outside air temperature is extremely hot or cold.

The following objects may not be recognized by the sensor:

1. Sharp or slim objects such as ropes, chains or small poles.
2. Objects, which tend to absorb sensor frequency such as clothes, spongy material or snow.
3. Undetectable objects smaller than 40 in. (100 cm) and narrower than 6 in. (14 cm) in diameter.

✻ NOTICE

1. The warning may not sound sequentially depending on the speed and shapes of the objects detected.
2. Parking Distance Warning may malfunction if the vehicle bumper height or sensor installation has been modified. Any non-factory installed equipment or accessories may also interfere with the sensor performance.
3. Sensor may not recognize objects less than 30 cm (12 in.) from the sensor, or it may sense an incorrect distance. Use with caution.
4. When the sensor is frozen or stained with snow or water, the sensor may be inoperative until the stains are removed using a soft cloth.
5. Do not push, scratch or strike the sensor with any hard objects that could damage the surface of the sensor. Sensor damage could occur.

✻ NOTICE

This system can only sense objects within the range and location of the sensors, it can not detect objects in other areas where sensors are not installed. Also, small or slim objects, or objects located between sensors may not be detected.
Always visually check in front and behind the vehicle when driving.
Be sure to inform any drivers in the vehicle that may be unfamiliar with the system regarding the systems capabilities and limitations.

⚠ WARNING

Pay close attention when the vehicle is driven close to objects on the road, particularly pedestrians, and especially children. Be aware that some objects may not be detected by the sensors, due to the objects distance, size or material, all of which can limit the effectiveness of the sensor. Always perform a visual inspection to make sure the vehicle is clear of all obstructions before moving the vehicle in any direction.

Self-diagnosis

When you shift the gear to the R (Reverse) position and if one or more of the below occurs you may have a malfunction in Forward/Reverse Parking Distance Warning.

- You don't hear an audible warning sound or if the buzzer sounds intermittently.
- (blinks) is displayed. (if equipped)

If this occurs, we recommend that the system be checked by an authorized Kia dealer.

✻ NOTICE

Your new vehicle warranty does not cover any accidents or damage to the vehicle or injuries to its occupants related to Parking Distance Warning system. Always drive safely and cautiously.

LIGHTING

Battery saver function

- The purpose of this feature is to prevent the battery from being discharged if the lights are left in the ON position. The system automatically shuts off the parking lights 30 seconds after the ignition key is removed and the driver's door is opened and closed.
- With this feature, the parking lights will turn off automatically if the driver parks on the side of the road at night and opens the driver's side door.

  If necessary, to keep the parking lights on when the ignition key is removed, perform the following:

  1) Open the driver-side door.
  2) Turn the parking lights OFF and ON again using the light switch on the steering column.

Daytime running light

The Daytime Running Lights (DRL) can make it easier for others to see the front of your vehicle during the day. DRL can be helpful in many different driving conditions, and it is especially helpful after dawn and before sunset.

The DRL system turns OFF when:

1. The headlight switch is ON.
2. The engine is OFF.
3. Engaging the Parking Brake
4. The front fog light is ON.

Lighting control

OQL048604N

The light switch has a Headlight and a Parking light position.

To operate the lights, turn the knob at the end of the control lever to one of the following positions:

(1) OFF position

(2) Auto light position

(3) Parking & Tail light

(4) Headlight position

Parking & Tail light ( )

OQL048605N

When the light switch is in the parking light position, the tail, license and instrument panel lights will turn ON.

Headlight position ( )

OQL048606N

When the light switch is in the headlight position, the head, tail, license lights will turn ON.

✻ NOTICE

The ignition switch must be in the ON position to turn on the headlights.

Auto light position

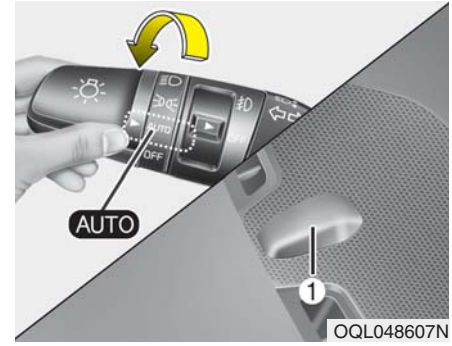

OQL048607N

When the light switch is in the AUTO light position, the taillights and headlights will turn ON or OFF automatically depending on the amount of light outside the vehicle.

When the light switch is positioned at an auto light position, at first, the wiper will turn on and then, after 5 seconds the head lamp will turn on automatically.

If the head lamp has been turned on due to this function of the vehicle, the head lamp will turn off 60 seconds after the wiper has been turned off.

⚠ **CAUTION**

- ***Never place anything over the sensor (1) located on the instrument panel as this will ensure better auto-light system control.***
- ***Do not clean the sensor using a window cleaner as the cleaner may leave a light film which could interfere with the sensor's operation.***
- ***If your vehicle has window tint or other types of metallic coating on the front windshield, the Auto light system may not work properly.***

High beam operation

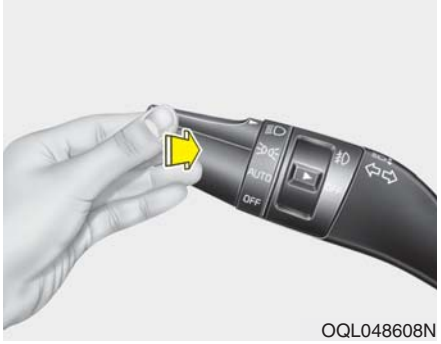

OQL048608N

To turn on the high beam headlamp, push the lever away from you. The lever will return to its original position.

The high beam indicator will light when the headlight high beams are switched on.

To turn off the high beam headlamp, pull the lever to you when the high beam is on. The lever will return to its original position.

To prevent the battery from being discharged, do not leave the lights on for a prolonged time while the engine is not running.

⚠ **WARNING - High beams**

Do not use high beam when there are other vehicles. Using high beam could obstruct the other driver's vision.

OQL048609N

To flash the headlights, pull the lever towards you. It will return to the normal (low beam) position when released. The headlight switch does not need to be on to use this flashing feature.

High Beam Assist (HBA) (if equipped)

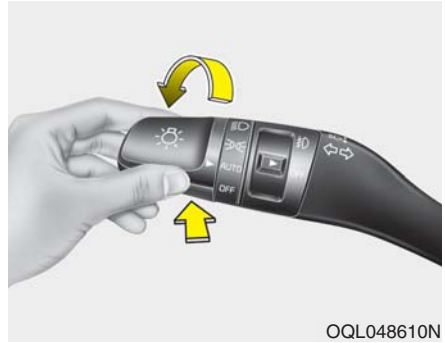

OQL048610N

High Beam Assist is a system that automatically adjusts the headlamp range (switches between high beam and low beam) according to the brightness of other vehicles and road conditions.

Operating condition

1. Place the light switch in the AUTO position.
2. Turn on the high beam by pushing the lever away from you.

   High Beam Assist (AUTO) indicator will illuminate.
3. The High Beam Assist will turn on when vehicle speed is above 40 kph (25 mph).
   - If the lever is pushed away when High Beam Assist is operating, the High Beam Assist will turn off and the high beam will be on continuously. High Beam Assist (AUTO) indicator will turn off.
   - If the lever is pushed away from you when High Beam Assist is operating, the High Beam Assist will turn off and the standard high beams will turn ON.
4. If the light switch is placed to the headlamp position, High Beam Assist will turn off and the low beam will be on continuously.

The high beam switches to low beam in the below conditions.

- When the High Beam Assist is off.
- When the light switch is not in the AUTO position.
- When the headlamp is detected from an on-coming vehicle
- When the tail lamp is detected from the front vehicle.
- When the surrounding is bright enough high beams are not needed.
- When streetlights or other lights are detected.
- When vehicle speed is below 30 kph (19 mph).
- When headlamp / taillamp of bicycle/motorcycle is detected

Warning light and message

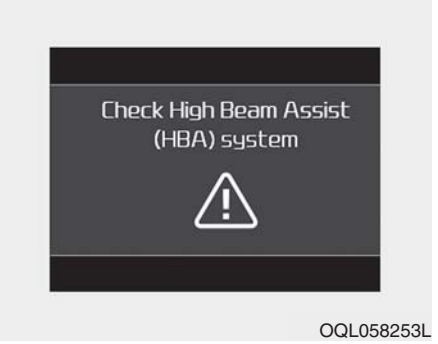

OQL058253L

When the High Beam Assist System is not working properly, the warning message will come on for a few second. After the message disappears, the master warning light (⚠) will illuminate.

Take your vehicle to an authorized Kia dealer and have the system checked.

The system may not operate normally in the below conditions.

- When the light from a vehicle is not detected because of lamp damage, hidden from sight, etc.
- When the lamp of a vehicle is covered with dust, snow or water.
- When the light from a vehicle is not detected because of exhaust fumes, smoke, fog, snow, etc.
- When the front window is covered with foreign matters such as ice, dust, fog, or is damaged.
- When there is a similar shape as a vehicle's lamps.
- When it is hard to see because of fog, heavy rain or snow.
- When the headlamp is not repaired or replaced at an authorized dealer.
- When headlamp aiming is not properly adjusted.
- When driving on a narrow curved road or rough road.

- When driving downhill or uphill.
- When only part of the vehicle in front is visible on a crossroad or curved road.
- When there is a traffic light, reflecting sign, flashing sign or mirror.
- When the road conditions are bad such as being wet or covered with snow.
- When the front vehicle's headlamps are off but the fog lamps on.
- When a vehicle suddenly appears from a curve.
- When the vehicle is tilted from a flat tire or being towed.
- When the LKA (Lane Keeping Assist) warning light illuminates. (if equipped)

✻ NOTICE

- **Do not place any accessories, stickers or tint the windshield.**
- **Have on the windshield glass replaced from an authorized dealer.**
- **Do not remove or damage related parts of the High Beam Assist system.**
- **Be careful that water doesn't get into the High Beam Assist unit.**
- **Do not place objects on the dashboard that reflect light such as mirrors, white paper, etc. The system may not function properly if sunlight is reflected.**
- **At times, the Smart High Beam system may not operate due to system limitations. Always check the road conditions for your safety. When the system does not operate normally, manually change between the high beam and low beam.**
- **While other beeps such as the seat belt warning sound are in operation and override the LKA alarming system, LKA beeps may not occur.**

Turn signals and lane change signals

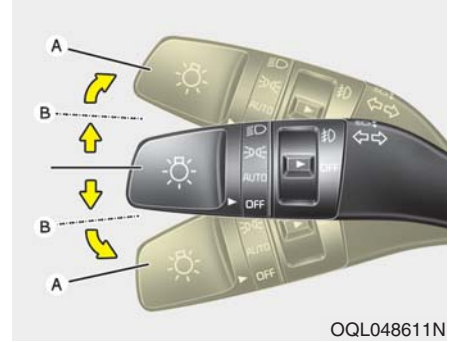

OQL048611N

The ignition switch must be on for the turn signals to function. To turn on the turn signals, move the lever up or down (A). The green arrow indicators on the instrument panel indicate which turn signal is operating.

They will self-cancel after a turn is completed. If the indicator continues to flash after a turn, manually return the lever to the OFF position.

To signal a lane change, move the turn signal lever slightly and hold it in position (B). The lever will return to the OFF position when released.

If an indicator stays on and does not flash or if it flashes abnormally, one of the turn signal bulbs may be burned out and will require replacement.

✻ NOTICE

If an indicator flash is abnormally quick or slow, a bulb may be burned out or have a poor electrical connection in the circuit.

Front fog light (if equipped)

OQL048612N

Fog lights are used to provide improved visibility when visibility is poor due to fog, rain or snow, etc. The fog lights will turn on when the fog light switch (1) is turned to the on position after the headlight is turned on.

To turn off the fog lights, turn the fog light switch (1) to the OFF position.

When in operation, the fog lights consume large amounts of vehicle electrical power. Only use the fog lights when visibility is poor.

Check headlight

OQLA055176

This warning message illuminates if there is a malfunction (burned-out bulb except LED lamp or circuit malfunction) with the headlamp. In this case, have your vehicle inspected by an authorized Kia dealer.

✻ NOTICE

- **When replacing the bulb, use the same wattage bulb.**
  For more information, refer to "BULB WATTAGE" in chapter 8.
- **If the different wattage bulb is equipped with the vehicle, this warning message is not displayed.**

Dynamic Bending Light (DBL) (if equipped)

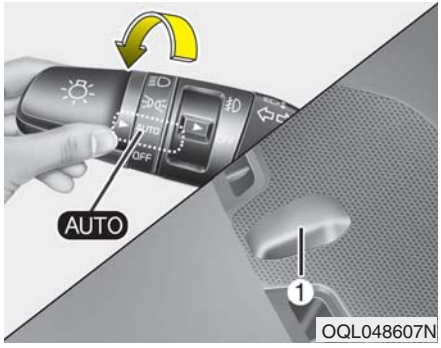

Dynamic Bending Light (DBL) uses the steering angle and vehicle speed, to keep your field of vision wide by swiveling and leveling the headlamp.

Change the switch to the AUTO position when the engine is running. The Dynamic Bending Light (DBL) system will operate when the headlamp is ON. To turn off the DBL, change the switch to other positions. After turning the DBL off, headlamp swiveling no longer occurs, but leveling operates continuously.

If the DBL malfunction indicator comes on, the DBL is not working properly. Drive to the nearest safe location and restart the engine. If the indicator continuously remains on, have the system checked by an authorized Kia dealer.

WIPERS AND WASHERS

Windshield wiper/washer

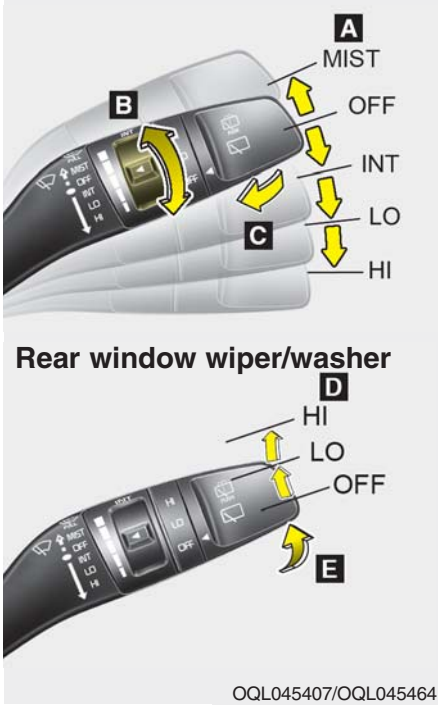

OQL045407/OQL045464

A : Wiper speed control (front)

- MIST – Single wipe
- OFF – Off
- INT – Intermittent wipe
- LO – Low wiper speed
- HI – High wiper speed

B : Intermittent control wipe time adjustment

C : Wash with brief wipes (front)*

D : Rear wiper/washer control

- HI – Continuous wipe
- LO – Intermittent wipe
- OFF – Off

E : Wash with brief wipes (rear)*

* if equipped

Windshield wipers

Operates as follows when the ignition switch is turned ON.

MIST : For a single wiping cycle, move the lever to this (MIST) position and release it. The wipers will operate continuously if the lever is held in this position.

OFF : Wiper is not in operation

INT : Wiper operates intermittently at the same wiping intervals. Use this mode in light rain or mist. To vary the speed setting, turn the speed control knob.

LO : Normal wiper speed

HI : Fast wiper speed

✻ NOTICE

If there is heavy accumulation of snow or ice on the windshield, defrost the windshield for about 10 minutes, or until the snow and/or ice is removed before using the windshield wipers to ensure proper operation.

If you do not remove the snow and/or ice before using the wiper and washer, it may damage the wiper and washer system.

Front windshield washers

OQL045409

In the OFF position, pull the lever gently toward you to spray washer fluid on the windshield and to run the wipers 1-3 cycles.

Use this function when the windshield is dirty.

The spray and wiper operation will continue until you release the lever.

If the washer does not work, check the washer fluid level. If the fluid level is not sufficient, you will need to add appropriate non-abrasive windshield washer fluid to the washer reservoir.

The reservoir filler neck is located in the front of the engine compartment on the passenger side.

⚠ CAUTION - Washer pump

To prevent possible damage to the washer pump, do not operate the washer when the fluid reservoir is empty.

⚠ WARNING - Obscured visibility

Do not use the washer in freezing temperatures without first warming the windshield with the defrosters; the washer solution could freeze on the windshield and obscure your vision.

⚠ CAUTION - Wipers & windshields

- ***To prevent possible damage to the wipers or windshield, do not operate the wipers when the windshield is dry.***
- ***To prevent damage to the wiper blades, do not use gasoline, kerosene, paint thinner, or other solvents on or near them.***
- ***To prevent damage to the wiper arms and other components, do not attempt to move the wipers manually.***

Rear window wiper and washer switch

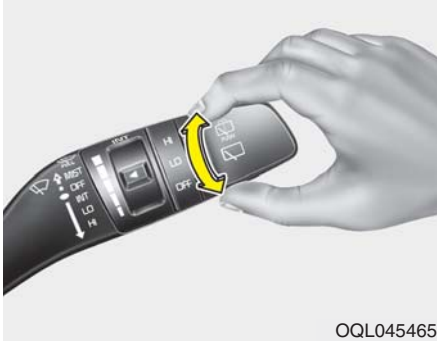

OQL045465

The rear window wiper and washer switch is located at the end of the wiper and washer switch lever. Turn the switch to the desired position to operate the rear wiper and washer.

HI : Continuous wipe

LO : Intermittent wipe

OFF : OFF

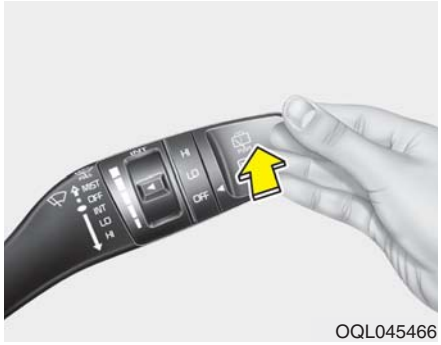

OQL045466

Push the lever away from you to spray rear washer fluid and to run the rear wipers 1~3 cycles. The spray and wiper operation will continue until you release the lever

INTERIOR LIGHTS

Do not use the interior lights for extended periods when the engine is not running.

It may cause battery discharge.

⚠ WARNING - Interior Lights

Do not use the interior lights when driving in the dark. Accidents could happen because the view may be obscured by interior lights.

Automatic turn off function

The interior lights automatically turn off approximately 20 minutes after the ignition switch is turned off, if the lights are in the ON position.

If your vehicle is equipped with the theft alarm system, the interior lights automatically turn off approximately 5 seconds after the system is in armed stage.

Room lamp

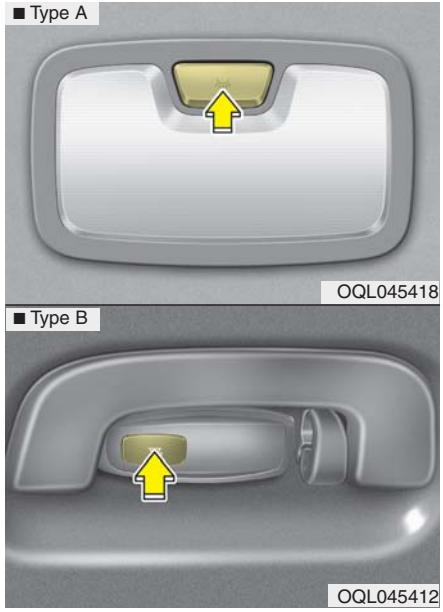

- : The light stays on at all times.

Map lamp

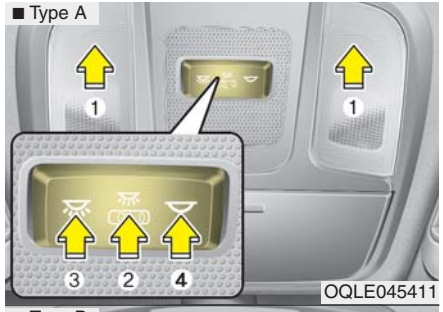

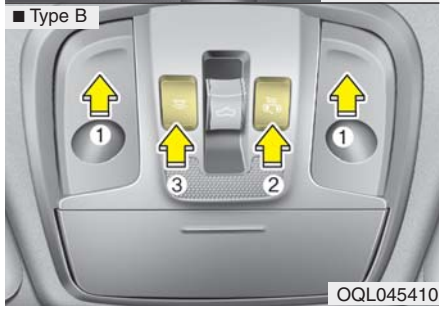

- Press the lens (1) to turn ON the map lamp.

  To turn the map lamp OFF press the lens (1) again.

- (2) : DOOR mode
  - The map lamp and room lamp come on when a door is opened. The lamps go out after approximately 30 seconds.
  - The map lamp and room lamp come on for approximately 30 seconds when doors are unlocked with a transmitter or smart key as long as the doors are not opened.
  - The map lamp and room lamp will stay on for approximately 20 minutes if a door is opened with the ignition switch in the ACC or LOCK/OFF position.
  - The map lamp and room lamp will stay on continuously if the door is opened with the ignition switch in the ON position.
  - The map lamp and room lamp will go out immediately if the ignition switch is changed to the ON position or all doors are locked.
  - To turn off the DOOR mode, press the DOOR button (2) once again (not pressed).

✻ NOTICE

The DOOR mode and ROOM mode be selected at the same time.

Front Room Lamp:

- Type A

(3): Press this switch to turn the front and rear room lamps on.

(4): Press this switch to turn the front and rear room lamps off.

- Type B

(3): Press this switch to turn the front and rear room lamps on and off.

Liftgate room lamp

The liftgate room lamp comes on when the liftgate is opened.

✻ NOTICE

The liftgate lamp comes on as long as the liftgate lid is open. To prevent unnecessary charging system drain, close the liftgate lid securely after using the liftgate.

Glove box lamp

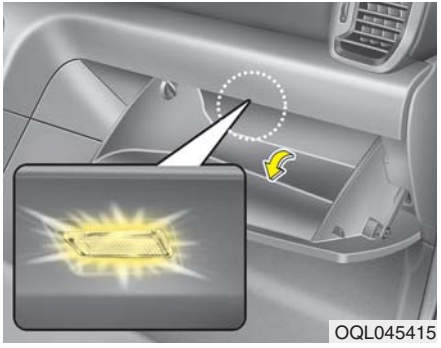

The glove box lamp comes on when the glove box is opened.

To prevent unnecessary battery drain, close the glove box securely after using the glove box.

Vanity mirror lamp (if equipped)

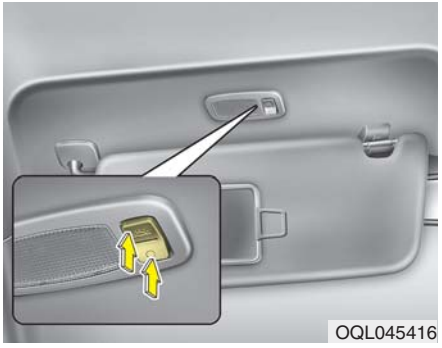

Push the switch to turn the light on or off.

- : The lamp will turn on if this button is pressed.
- ◯ : The lamp will turn off if this button is pressed.

⚠ CAUTION - Vanity mirror lamp

Always have the switch in the off position when the vanity mirror lamp is not in use. If the sunvisor is closed without the lamp off, it may discharge the battery or damage the sunvisor.

WELCOME SYSTEM (IF EQUIPPED)

Headlight (Headlamp) escort function

The headlights (and/or taillights) remain on for approximately 5 minutes after the ignition key is removed or turned to the ACC or LOCK position. However, if the driver's door is opened and closed, the headlights are turned off after 15 seconds.

The headlights can be turned off by pressing the lock button on the transmitter or smart key twice or turning off the light switch from the headlight or Auto light position.

Interior light

When the interior light switch is in the DOOR position and all doors (and trunk) are locked and closed, the room lamp will come on for 30 seconds if any of the below is performed.

- Without smart key system
  - When the door unlock button is pressed on the transmitter.
- With the smart key system
  - When the door unlock button is pressed on the smart key.
  - When the button of the outside door handle is pressed.

At this time, if you press the door lock button, the lamps will turn off immediately.

Pocket lamp (if equipped)

When all doors are locked and closed, the pocket lamp will come on for 15 seconds if any of the below is performed.

- With the smart key system
  - When the door unlock button is pressed on the smart key.
  - When the button of the outside door handle is pressed.

At this time, if you press the door lock button, the lamps will turn off immediately.

DEFROSTER

⚠ **CAUTION - Conductors**

To prevent damage to the conductors bonded to the inside surface of the rear window, never use sharp instruments or window cleaners containing abrasives to clean the window.

If you want to defrost and defog the front windshield, refer to “Windshield defrosting and defogging” in this section.

Rear window defroster

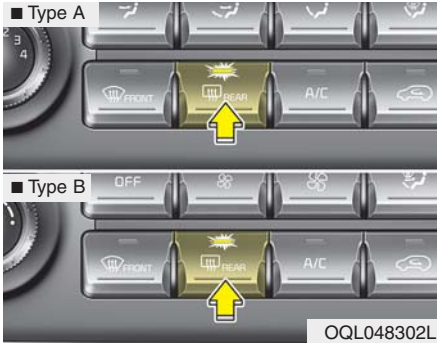

The defroster heats the window to remove frost, fog and thin ice from the rear window, while the engine is running.

To activate the rear window defroster, press the rear window defroster button located in the center facia switch panel. The indicator on the rear window defroster button illuminates when the defroster is ON.

If there is heavy accumulation of snow on the rear window, brush it off before operating the rear defroster.

The rear window defroster automatically turns off after approximately 20 minutes or when the ignition switch is turned off. To turn off the defroster, press the rear window defroster button again.

Outside rearview mirror defroster

If your vehicle is equipped with the outside rearview mirror defrosters, they will operate at the same time you turn on the rear window defroster.

Wiper deicer (if equipped)

If your vehicle is equipped with the wiper deicer, it will operate at the same time you turn on the rear window defroster.

MANUAL CLIMATE CONTROL SYSTEM (IF EQUIPPED)

1. Fan speed control knob
2. Front windshield defroster button
3. Rear window defroster button
4. Air conditioning button
5. Air intake control button
6. Mode selection button
7. Temperature control button

✻ NOTICE

Operating the blower when the ignition switch is in the ON position could cause the battery to discharge. Operate the blower when the engine is running.

OQL048300L

Heating and air conditioning

1. Start the engine.
2. Set the mode to the desired position.

   For improving the effectiveness of heating and cooling;

   - Heating:
   - Cooling:
3. Set the temperature control to the desired position.
4. Set the air intake control to the outside (fresh) air position (if equipped).
5. Set the fan speed control to the desired speed.
6. If air conditioning is desired, turn the air conditioning system (if equipped) on.

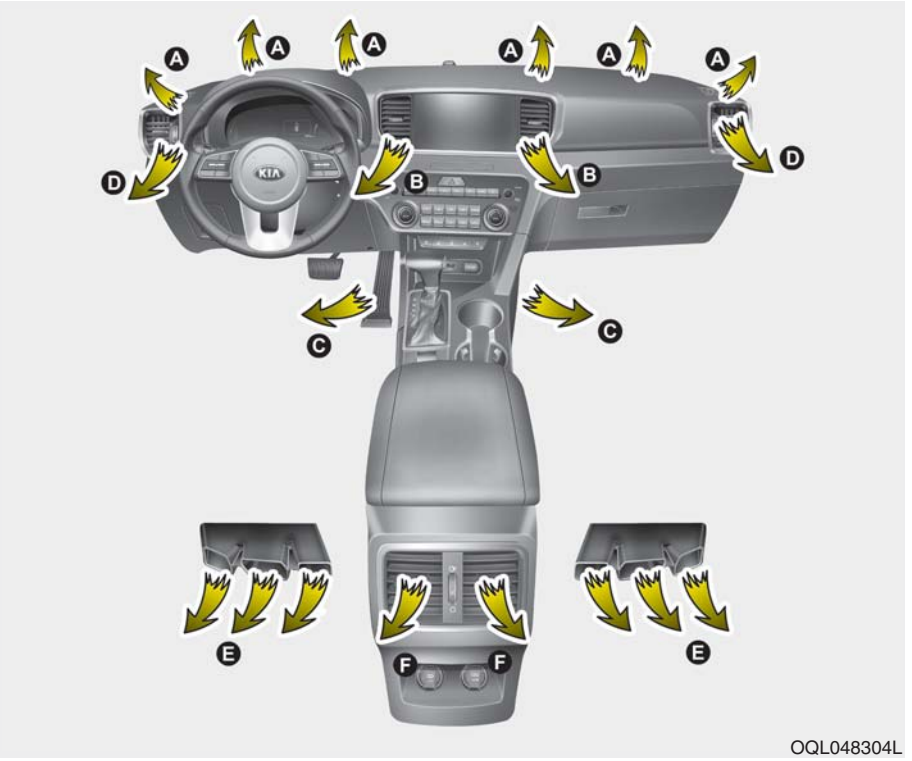

Mode selection

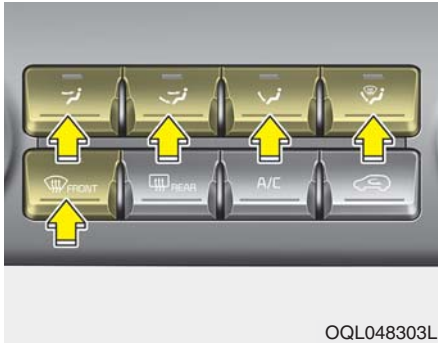

OQL048303L

The mode selection button controls the direction of the air flow through the ventilation system.

Air can be directed to the floor, dashboard outlets, or windshield. Five symbols are used to represent MAX A/C, Face, Bi-Level, Floor, Floor-Defrost and Defrost air position.

The MAX A/C mode is used to cool the inside of the vehicle faster.

Face-Level (B, D, F)

Air flow is directed toward the upper body and face. Additionally, each outlet can be controlled to direct the air discharged from the outlet.

Bi-Level (B, C, D, E, F)

Air flow is directed towards the face and the floor.

Floor-Level (A, C, D, E, F)

Most of the air flow is directed to the floor, with a small amount of the air being directed to the windshield and side window defrosters.

Floor/Defrost-Level (A, C, D, E, F)

Most of the air flow is directed to the floor and the windshield with a small amount directed to the side window defrosters.

Defrost-Level (A, D)

Most of the air flow is directed to the windshield with a small amount of air directed to the side window defrosters.

✻ NOTICE - 2nd row outlet vents (E,F)

- **The air flow of the 2nd row outlet vents is controlled by the front climate control system and delivered through the inside air duct of the floor (E, F).**
- **The air flow of the 2nd row outlet vents (E, F) may be weaker than the instrument panel vents for the long air duct.**

MAX A/C selection

OQL048305L

The MAX A/C mode is used to cool the inside of the vehicle faster.

Air flow is directed toward the upper body and face.

In this mode, the air conditioning and the recirculated air position will be selected automatically.

OQL048306L

Instrument panel vents

The outlet vents can be opened or closed separately using the thumb-wheel.

Also, you can adjust the direction of air flow these vents using the vent control lever as shown.

Temperature control

OQL048307L

The temperature control knob allows you to control the temperature of the air flowing from the ventilation system. To change the air temperature in the passenger compartment, turn the knob to the right position for warm and hot air or left position for cooler air.

Air intake control

OQL048308L

The air intake control is used to select the outside (fresh) air position or recirculated air position.

To change the air intake control position, press the control button.

Recirculated air position

With the recirculated air position selected, air from the passenger compartment will be drawn through the heating system and heated or cooled according to the function selected.

Outside (fresh) air position

If the recirculated air position button is not selected, air enters the vehicle from outside and is heated or cooled according to the function selected.

Prolonged operation of the heater in the recirculated air position (without air conditioning selected) may cause fogging of the windshield and side windows and the air within the passenger compartment may become stale. In addition, prolonged use of the air conditioning with the recirculated air position selected will result in excessively dry air in the passenger compartment.

Sunroof inside air recirculation (if equipped)

If the sunroof opens while the heater or Air Conditioning system operates, the outside (fresh) air will be selected automatically for ventilating the car. Then, if you select the recirculated air position, the outside (fresh) air will be selected automatically after 3 minutes.

If you close the sunroof, the intake mode will be changed to the previous selected mode.

⚠ WARNING - Reduced visibility

Continued use of the climate control system in the recirculated air position may allow humidity to increase inside the vehicle which may fog the glass and obscure visibility.

⚠ WARNING - Sleeping with A/C on

Do not sleep in a vehicle with the air conditioning or heating system on as this may cause serious harm or death due to a drop in the oxygen level and/or body temperature.

⚠ WARNING - Recirculated air

Continued use of the climate control system in the recirculated air position can cause drowsiness or sleepiness, and loss of vehicle control. Set the air intake control to the outside (fresh) air position as much as possible while driving.

Fan speed control

OQL048309L

The ignition switch must be in the ON position for fan operation.

The fan speed control knob allows you to control the fan speed of the air flowing from the ventilation system. To change the fan speed, turn the knob to the right for higher speed or left for lower speed.

Setting the fan speed control knob to the “0” position turns off the fan.

Air conditioning

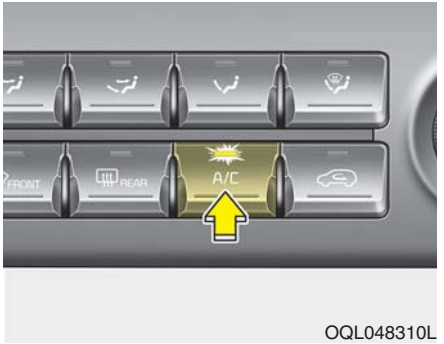

OQL048310L

Press the A/C button to turn the air conditioning system on (indicator light will illuminate). Press the button again to turn the air conditioning system off.

System operation

Ventilation

1. Set the mode to the position.
2. Set the air intake control to the outside (fresh) air position.
3. Set the temperature control to the desired position.
4. Set the fan speed control to the desired speed.

Heating

1. Set the mode to the position.
2. Set the air intake control to the outside (fresh) air position.
3. Set the temperature control to the desired position.
4. Set the fan speed control to the desired speed.
5. If dehumidified heating is desired, turn the air conditioning system (if equipped) on.

- If the windshield fogs up, set the mode to the or position.

Operation Tips

- To keep dust or unpleasant fumes from entering the vehicle through the ventilation system, temporarily set the air intake control to the recirculated air position. Be sure to return the control to the fresh air position when the irritation has passed to keep fresh air in the vehicle. This will help keep the driver alert and comfortable.
- Air for the heating/cooling system is drawn in through the grilles just ahead of the windshield. Care should be taken that these are not blocked by leaves, snow, ice or other obstructions.
- To prevent interior fog on the windshield, set the air intake control to the fresh air position and fan speed to the desired position, turn on the air conditioning system, and adjust the temperature control to desired temperature.

Air conditioning

Kia Air Conditioning Systems are filled with refrigerant.

1. Start the engine. Push the air conditioning button.
2. Set the mode to the position.
3. Set the air intake control to the outside air or recirculated air position.
4. Adjust the fan speed control and temperature control to maintain maximum comfort.

- The refrigerant system should only be serviced by trained and certified technicians to ensure proper and safe operation.
- The refrigerant system should be serviced in a well-ventilated place.
- The air conditioning evaporator (cooling coil) shall never be repaired or replaced with one removed from a used or salvaged vehicle and new replacement MAC evaporators should be certified (and labeled) as meeting SAE Standard J2842.

⚠ **CAUTION - Excessive A/C Use**

When using the air conditioning system, monitor the temperature gauge closely while driving up hills or in heavy traffic when outside temperatures are high. Air conditioning system operation may cause engine overheating. Continue to use the blower fan but turn the air conditioning system off if the temperature gauge indicates engine overheating.

✻ NOTICE

When opening the windows in humid weather, air conditioning may create water droplets inside the vehicle. Since excessive water droplets may cause damage to electrical equipment, air conditioning should only be used with the windows closed.

Air conditioning system operation tips

- If the vehicle has been parked in direct sunlight during hot weather, open the windows for a short time to let the hot air inside the vehicle escape.
- To help reduce moisture inside of the windows on rainy or humid days, decrease the humidity inside the vehicle by operating the air conditioning system.
- During air conditioning system operation, you may occasionally notice a slight change in engine speed as the air conditioning compressor cycles. This is a normal system operation characteristic.
- Use the air conditioning system every month only for a few minutes to ensure maximum system performance.
- When using the air conditioning system, you may notice clear water dripping (or even puddling) on the ground under the passenger side of the vehicle. This is a normal system operation characteristic.
- Operating the air conditioning system in the recirculated air position provides maximum cooling, however, continual operation in this mode may cause the air inside the vehicle to become stale.
- During cooling operation, you may occasionally notice a misty air flow because of rapid cooling and humid air intake. This is a normal system operation characteristic.

Climate control air filter

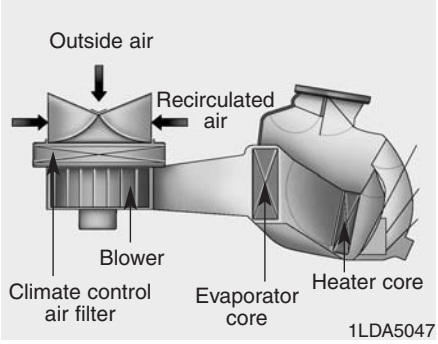

The climate control air filter installed behind the glove box filters the dust or other pollutants that come into the vehicle from the outside through the heating and air conditioning system. If dust or other pollutants accumulate in the filter over a period of time, the air flow from the air vents may decrease, resulting in moisture accumulation on the inside of the windshield even when the outside (fresh) air position is selected. If this happens, we recommend that the climate control air filter be replaced by an authorized Kia dealer.

✻ NOTICE

- **Replace the filter according to the Maintenance Schedule.**
  If the vehicle is being driven in severe conditions such as dusty or rough roads, more frequent climate control air filter inspections and changes are required.
- **When the air flow rate suddenly decreases, we recommend that the system should be inspected by an authorized Kia dealer.**

⚠ WARNING - Vehicles equipped with R-1234yf

Since the refrigerant is mildly inflammable and operated at high pressure, the air conditioning system should only be serviced by trained and certified technicians. (Refer to the SAE J2845)

It is important that the correct type and amount of oil and refrigerant are used.

All refrigerants should be reclaimed with proper equipment.

Venting refrigerants directly to the atmosphere is harmful to individuals and environment.

Failure to heed these warnings can lead to serious injuries.

Checking the amount of air conditioner refrigerant and compressor lubricant

When the amount of refrigerant is low, the performance of the air conditioning is reduced. Overfilling also has a negative influence on the air conditioning system.

Therefore, if abnormal operation is found, have the system inspected by an authorized Kia dealer.

⚠ WARNING

The oil and refrigerant in your vehicle's air conditioning system is under very high pressure. If proper service procedures are not followed an explosion may result. To reduce the risk of serious injury or death, the air conditioning system in your vehicle should only be serviced by trained and certified technicians.

⚠ CAUTION - A/C Repair

It is important that the correct type and amount of oil and refrigerant is used, otherwise damage to the vehicle may occur. To prevent damage, the air conditioning system in your vehicle should only be serviced by trained and certified technicians.

AUTOMATIC CLIMATE CONTROL SYSTEM (IF EQUIPPED)

■ **Type A**

■ **Type B**

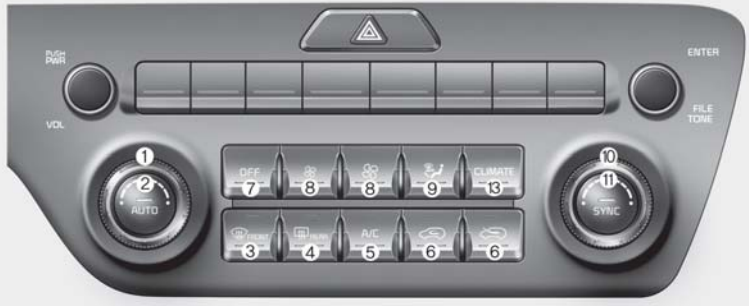

1. Driver's temperature control knob
2. AUTO (automatic control) button
3. Front windshield defroster button
4. Rear window defroster button
5. Air conditioning button
6. Air intake control button
7. OFF button
8. Fan speed control button
9. Mode selection button
10. Passenger's temperature control knob
11. SYNC temperature control selection button
12. Climate control display
13. Climate information screen selection button

✻ NOTICE

Operating the blower when the ignition switch is in the ON position could cause the battery to discharge. Operate the blower when the engine is running.

OQL048301/OQL048329L

Automatic heating and air conditioning

OQL048311L

1. Press the AUTO button. The modes, fan speeds, air intake and air-conditioning will be controlled automatically by setting the temperature.

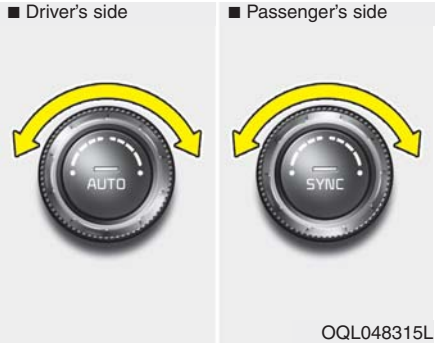

OQL048315L

2. Turn the temperature control knob to the desired temperature.

✻ NOTICE

- **To turn the automatic operation off, select any button or switch of the following:**
  - **Mode selection button**
  - **Air conditioning button**
  - **Front windshield defroster button (Press the button one more time to deselect the front windshield defroster function. The 'AUTO' sign will illuminate on the information display once again.)**
  - **Air intake control button**
  - **Fan speed control switch**

  The selected function will be controlled manually while other functions operate automatically.
- **For your convenience and to improve the effectiveness of the climate control, use the AUTO button and set the temperature to 23°C (73°F).**

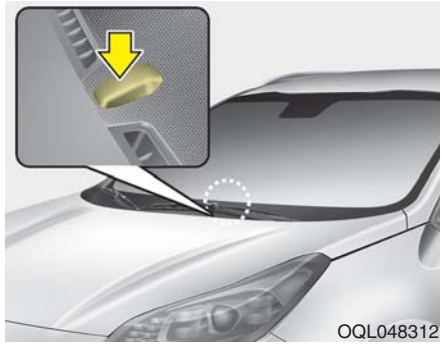

✻ NOTICE

Never place anything over the sensor located on the instrument panel to ensure better control of the heating and cooling system.

Manual heating and air conditioning

The heating and cooling system can be controlled manually by pressing buttons or turning knob(s) other than the AUTO button. In this case, the system works sequentially according to the order of buttons or knob(s) selected.

1. Start the engine.
2. Set the mode to the desired position.

   For improving the effectiveness of heating and cooling;

   - Heating:
   - Cooling:
3. Set the temperature control to the desired position.
4. Set the air intake control to the outside (fresh) air position.
5. Set the fan speed control to the desired speed.
6. If air conditioning is desired, turn the air conditioning system on.

Press the AUTO button in order to convert to full automatic control of the system.

Mode selection

The mode selection button controls the direction of the air flow through the ventilation system.

The air flow outlet port is converted as follows:

Refer to the illustration in the “Manual climate control system”.

Face-Level

Air flow is directed toward the upper body and face. Additionally, each outlet can be controlled to direct the air discharged from the outlet.

Bi-Level

Air flow is directed towards the face and the floor.

Floor-Level

Most of the air flow is directed to the floor, with a small amount of the air being directed to the windshield and side window defrosters.

Floor/Defrost-Level

Most of the air flow is directed to the floor and the windshield with a small amount directed to the side window defrosters.

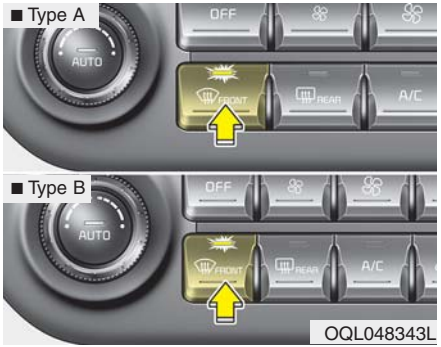

OQL048343L

Defrost-Level

Most of the air flow is directed to the windshield with a small amount of air directed to the side window defrosters.

OQL048306L

Instrument panel vents

The outlet vents can be opened or closed separately using the thumb-wheel.

Also, you can adjust the direction of air flow from these vents using the vent control lever as shown.

Temperature control

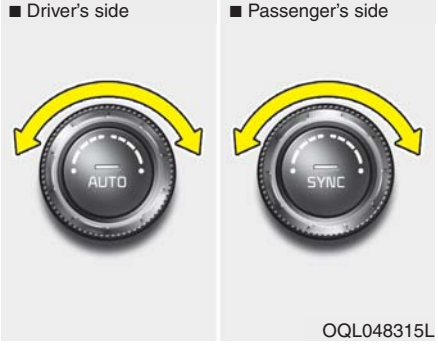

The temperature will increase to the maximum (HI) by turning the knob to the extreme right.

The temperature will decrease to the minimum (Lo) by turning the knob to the extreme left.

When turning the knob, the temperature will increase or decrease by 1°F/0.5°C. When set to the lowest temperature setting, the air conditioning will operate continuously.

Adjusting the driver and passenger side temperature equally

- Press the "SYNC" button to adjust the driver and passenger side temperature equally.

  The passenger side temperature will be set to the same temperature as the driver side temperature.
- Turn the driver side temperature control knob. The driver and passenger side temperature will be adjusted equally.

Adjusting the driver and passenger side temperature individually

- Press the "SYNC" button again to adjust the driver and passenger side temperature individually. The illumination of button turns off.
- Operate the driver side temperature control knob to adjust the driver side temperature.
- Operate the passenger side temperature control knob to adjust the passenger side temperature.

Temperature conversion

You can switch the temperature mode from Centigrade to Fahrenheit as follows:

While pressing the OFF button, press the AUTO button for 3 seconds or more.

The display will change from Centigrade to Fahrenheit, or from Fahrenheit to Centigrade.

If the battery has been discharged or disconnected, the temperature mode display will reset to Fahrenheit.

Air intake control

OQL048317L

This is used to select the outside (fresh) air position or recirculated air position.

To change the air intake control position, push the control button.

Outside (fresh) air position

With the outside (fresh) air position selected, air enters the vehicle from outside and is heated or cooled according to the function selected.

Recirculated air position

With the recirculated air position selected, air from the passenger compartment will be drawn through the heating system and heated or cooled according to the function selected.

Prolonged operation of the heater in the recirculated air position (without air conditioning selected) may cause fogging of the windshield and side windows and the air within the passenger compartment may become stale.

In addition, prolonged use of the air conditioning with the recirculated air position selected will result in excessively dry air in the passenger compartment.

Sunroof inside air recirculation (if equipped)

If the sunroof opens while the heater or Air Conditioning system operates, the outside (fresh) air will be selected automatically for ventilating the car. Then, if you select the recirculated air position, the outside (fresh) air will be selected automatically after 3 minutes.

If you close the sunroof, the intake mode will be changed to the previous selected mode.

Fan speed control

OQL045318

OQL045318L

The fan speed can be set to the desired speed by operating the fan speed control button.

To change the fan speed, press (✤) the button for higher speed, or push (✤) the button for lower speed. To turn the fan speed control off, press the front blower OFF button.

Air conditioning

OQL045319

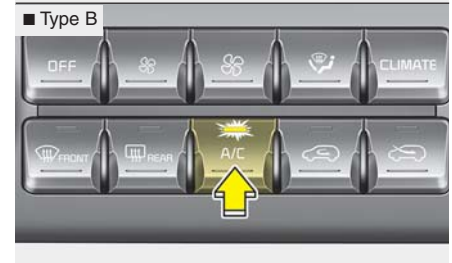

OQL045319L

Press the A/C button to turn the air conditioning system on (indicator light will illuminate).

Press the button again to turn the air conditioning system off.

⚠ WARNING - Reduced Visibility

Continuous use of the climate control system in the recirculated air position may allow humidity to increase inside the vehicle which may fog the glass and obscure visibility.

⚠ WARNING - Recirculated Air

Continued use of the climate control system in the recirculated air position can cause drowsiness or sleepiness, and loss of vehicle control. Set the air intake control to the outside (fresh) air position as much as possible while driving.

⚠ WARNING - Sleeping with A/C on

Do not sleep in a vehicle with the air conditioning or heating on as this may cause serious harm or death due to a drop in the oxygen level and/or body temperature.

OFF mode

OQL048320L

Press the front blower OFF button to turn off the front air climate control system. However, you can still operate the mode and air intake buttons as long as the ignition switch is in the ON position.

Climate information screen selection (if equipped)

OQL048321L

Press the climate information screen selection button to display climate information on the screen.

System operation

Ventilation

1. Set the mode to the position.
2. Set the air intake control to the outside (fresh) air position.
3. Set the temperature control to the desired position.
4. Set the fan speed control to the desired speed.

Heating

1. Set the mode to the position.
2. Set the air intake control to the outside (fresh) air position.
3. Set the temperature control to the desired position.
4. Set the fan speed control to the desired speed.
5. If dehumidified heating is desired, turn the air conditioning system (if equipped) on.

- If the windshield fogs up, set the mode to the or position.

Operation Tips

- To keep dust or unpleasant fumes from entering the vehicle through the ventilation system, temporarily set the air intake control to the recirculated air position. Be sure to return the control to the fresh air position when the irritation has passed to keep fresh air in the vehicle. This will help keep the driver alert and comfortable.
- Air for the heating/cooling system is drawn in through the grilles just ahead of the windshield. Care should be taken that these are not blocked by leaves, snow, ice or other obstructions.
- To prevent interior fog on the windshield, set the air intake control to the fresh air position and fan speed to the desired position, turn on the air conditioning system, and adjust the temperature control to desired temperature.

Air conditioning (if equipped)

All Kia Air Conditioning Systems are filled with R-1234yf refrigerant.

1. Start the engine. Press the air conditioning button.
2. Set the mode to the position.
3. Set the air intake control to the outside air or recirculated air position.
4. Adjust the fan speed control and temperature control to maintain maximum comfort.

- When maximum cooling is desired, set the temperature control to the extreme left position, set the mode control to the MAX A/C position, then set the fan speed control to the highest speed.

⚠ CAUTION - Excessive A/C Use

When using the air conditioning system, monitor the temperature gauge closely while driving up hills or in heavy traffic when outside temperatures are high. Air conditioning system operation may cause engine overheating. Continue to use the blower fan but turn the air conditioning system off if the temperature gauge indicates engine overheating.

✻ NOTICE

When opening the windows in humid weather, air conditioning may create water droplets inside the vehicle. Since excessive water droplets may cause damage to electrical equipment, air conditioning should only be used with the windows closed.

Air conditioning system operation tips

- If the vehicle has been parked in direct sunlight during hot weather, open the windows for a short time to let the hot air inside the vehicle escape.
- To help reduce moisture inside of the windows on rainy or humid days, decrease the humidity inside the vehicle by operating the air conditioning system.
- During air conditioning system operation, you may occasionally notice a slight change in engine speed as the air conditioning compressor cycles. This is a normal system operation characteristic.
- Use the air conditioning system every month only for a few minutes to ensure maximum system performance.

- When using the air conditioning system, you may notice clear water dripping (or even puddling) on the ground under the passenger side of the vehicle. This is a normal system operation characteristic.
- Operating the air conditioning system in the recirculated air position provides maximum cooling, however, continual operation in this mode may cause the air inside the vehicle to become stale.
- During cooling operation, you may occasionally notice a misty air flow because of rapid cooling and humid air intake. This is a normal system operation characteristic.

Climate control air filter

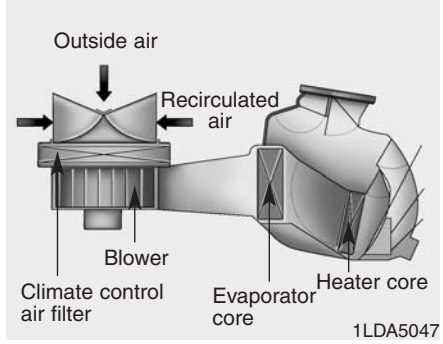

The climate control air filter installed behind the glove box filters the dust or other pollutants that come into the vehicle from the outside through the heating and air conditioning system. If dust or other pollutants accumulate in the filter over a period of time, the air flow from the air vents may decrease, resulting in moisture accumulation on the inside of the windshield even when the outside (fresh) air position is selected. If this happens, have the climate control air filter replaced by an authorized Kia dealer.

✻ NOTICE

- **Replace the filter according to the maintenance schedule.**
  If the vehicle is being driven in severe conditions such as dusty or rough roads, more frequent air conditioner filter inspections and changes are required.
- **When the air flow rate suddenly decreases, the system should be checked at an authorized Kia dealer.**

⚠ WARNING - Vehicles equipped with R-1234yf

Since the refrigerant is mildly inflammable and operated at high pressure, the air conditioning system should only be serviced by trained and certified technicians. (Refer to the SAE J2845)

It is important that the correct type and amount of oil and refrigerant are used.

All refrigerants should be reclaimed with proper equipment.

Venting refrigerants directly to the atmosphere is harmful to individuals and environment.

Failure to heed these warnings can lead to serious injuries.

Checking the amount of air conditioner refrigerant and compressor lubricant

When the amount of refrigerant is low, the performance of the air conditioning is reduced. Overfilling also has a negative impact on the air conditioning system.

Therefore, if abnormal operation is found, have the system inspected by an authorized Kia dealer.

⚠ WARNING

The oil and refrigerant in your vehicle's air conditioning system is under very high pressure. If proper service procedures are not followed an explosion may result. To reduce the risk of serious injury or death, the air conditioning system in your vehicle should only be serviced by trained and certified technicians.

⚠ CAUTION

It is important that the correct type and amount of oil and refrigerant is used, otherwise damage to the vehicle may occur. To prevent damage, the air conditioning system in your vehicle should only be serviced by trained and certified technicians.

WINDSHIELD DEFROSTING AND DEFOGGING

⚠ WARNING - Windshield heating

Do not use the or position during cooling operation in extremely humid weather. The difference between the temperature of the outside air and the windshield could cause the outer surface of the windshield to fog up, causing loss of visibility. In this case, set the mode selection to the position and fan speed control to the lower speed.

- For maximum defrosting, set the temperature control to the extreme right/hot position and the fan speed control to the highest speed.
- If warm air to the floor is desired while defrosting or defogging, set the mode to the floor-defrost position.
- Before driving, clear all snow and ice from the windshield, rear window, outside rear view mirrors, and all side windows.
- Clear all snow and ice from the hood and air inlet in the cowl grill to improve heater and defroster efficiency and to reduce the probability of fogging up the inside of the windshield.

Manual climate control system

To defog inside windshield

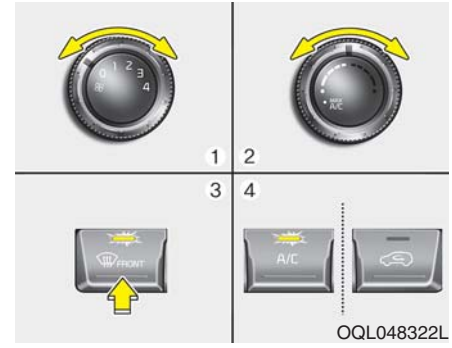

1. Set the fan speed to the desired position.
2. Select desired temperature.
3. Select the or position.
4. The outside (fresh) air and air conditioning will be selected automatically.

If the air conditioning and/or outside (fresh) air position are not selected automatically, press the corresponding button manually.

To defrost outside windshield

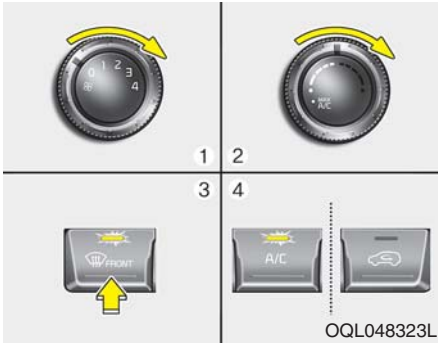

1. Set the fan speed to the highest position.
2. Set the temperature to the extreme hot position.
3. Select the position.
4. The outside (fresh) air and air conditioning will be selected automatically.

If the air conditioning is not selected automatically press the corresponding button manually.

Automatic climate control system

To defog inside windshield

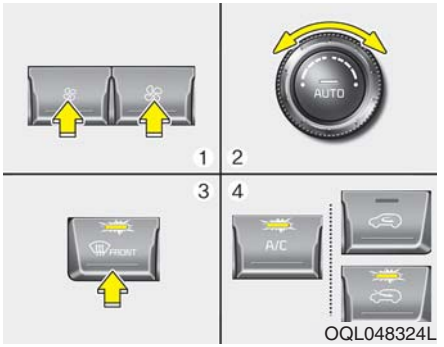

1. Set the fan speed to the desired position.
2. Select desired temperature.
3. Press the defroster button ( ).
4. The outside (fresh) air position will be selected automatically and the air conditioning will turn on according to the detected ambient temperature.

If the air conditioning and outside (fresh) air position are not selected automatically, adjust the corresponding button manually. If the position is selected, lower fan speed is adjusted to a higher fan speed.

To defrost outside windshield

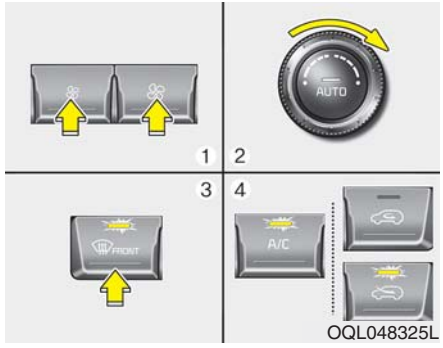

1. Set the fan speed to the highest position.
2. Set the temperature to the extreme hot (HI) position.
3. Press the defroster button ( ).
4. The outside (fresh) air position will be selected automatically and the air conditioning will turn on according to the detected ambient temperature.

Defogging logic

To reduce the possibility of fogging up the inside of the windshield, the air intake or air conditioning is controlled automatically according to certain conditions such as or position. To cancel automatic defogging logic or return to the automatic defogging logic, do the following.

Manual climate control system

1. Turn the ignition switch to the ON position.
2. Press the defroster button ( ).
3. Within 10 seconds after pressing the defroster button, press the air intake control button at least 5 times within 3 seconds.

If the battery has been discharged or disconnected, it resets to the defog logic status.

Automatic climate control system

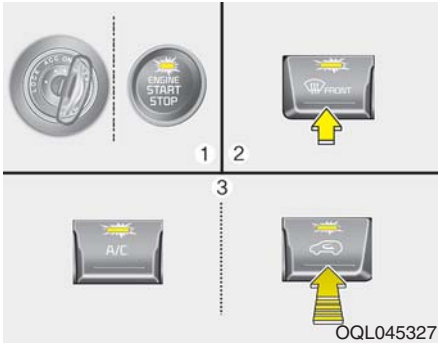

OQL045327

1. Turn the ignition switch to the ON position.
2. Press the defroster button ( ).
3. While pressing the air conditioning button (A/C), press the air intake control button at least 5 times within 3 seconds.

The recirculation indicator blinks 3 times with 0.5 second of interval. It indicates that the defogging logic is canceled or returned to the programmed status.

If the battery has been discharged or disconnected, it resets to the defog logic status.

Auto defogging system (if equipped)

OQL048057L

Auto defogging reduces the probability of fogging up the inside of the windshield by automatically sensing the moisture of inside the windshield.

The auto defogging system operates when the heater or air conditioning is on.

This indicator illuminates when the auto defogging system senses the moisture on the inside of the windshield and operates.

The Auto defogging system addresses excess moisture on the inside of the windshield in stages. For example if auto defogging does not defog inside the windshield at step 1 Outside air position, it tries to defog again at step 2 Operating the air conditioning.

Step 1 : Outside air position

Step 2 : Operating the air conditioning

Step 3 : Blowing air flow toward the windshield

Step 4 : Increasing air flow toward the windshield

To cancel or reset the Auto Defogging System

Press the front windshield defroster button for 3 seconds when the ignition switch is in the ON position. When the Auto Defogging System is canceled, ADS OFF symbol will blink 3 times and the ADS OFF will be displayed on the climate control information screen.

When the Auto Defogging System is reset, ADS OFF symbol will blink 6 times without a signal.

⚠ CAUTION

Do not remove the sensor cover located on the upper end of the passenger side windshield glass. Damage to the system parts could occur and may not be covered by your vehicle warranty.

CLEAN AIR (IF EQUIPPED)

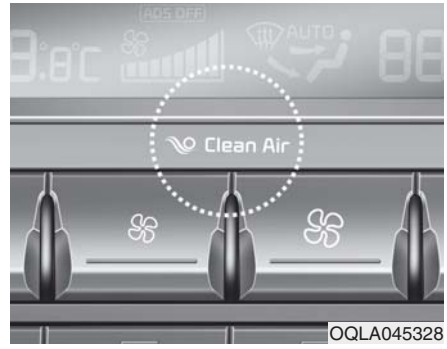

OQLA045328

When the ignition switch is in the ON position, the clean air function turns on automatically.

Also, the clean air function turns off automatically when the ignition switch turns to the OFF position.

STORAGE COMPARTMENTS

These compartments can be used to store small items required by the driver or passengers.

- To avoid possible theft, do not leave valuables in the storage compartment.
- Always keep the storage compartment covers closed while driving. Do not attempt to place so many items in the storage compartment that the storage compartment cover can not close securely.

⚠ WARNING - Flammable materials

Do not store, propane cylinders or other flammable/explosive materials in the vehicle. These items may catch fire and/or explode if the vehicle is exposed to hot temperatures for extended periods.

Center console storage

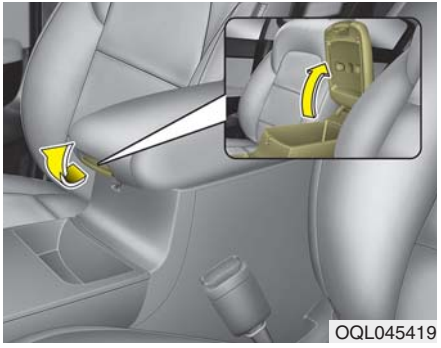

To open the center console storage, pull up the lever.

Glove box

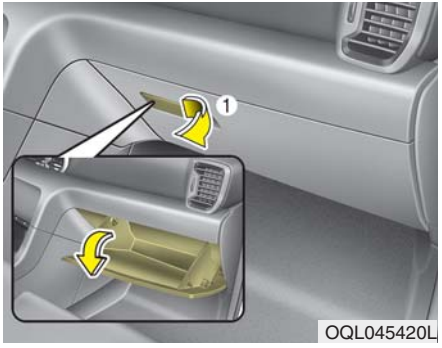

To open the glove box, pull the lever (1) and the glove box will automatically open. Close the glove box after use.

⚠ WARNING - Glove Box

To reduce the risk of injury in an accident or sudden stop, always keep the glove box door closed while driving.

✻ NOTICE

If the temperature control knob is in the warm or hot position, warm or hot air will flow into the glove box.

Sunglass holder

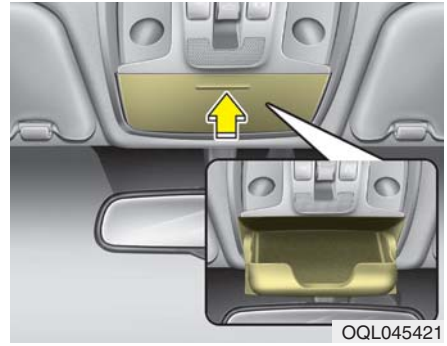

To open the sunglass holder, press the cover and the holder will slowly open. Place your sunglasses with the lenses facing out.

To close the sunglass holder push it up.

⚠ WARNING - Sunglass holder

Do not keep objects except sunglasses inside the sunglass holder. Heavier objects can be thrown from the holder in the event of a sudden stop or an accident, possibly injuring the passengers.

Luggage box

You can place tools, etc. in the box for easy access.

Grasp the handle on the edge of the cover and lift it.

⚠ **CAUTION**

- ***Do not open the sunglass holder while the vehicle is moving. The rear view mirror of the vehicle can be blocked by an opened sunglass holder.***
- ***Do not put the glasses forcibly into a sunglass holder to prevent breakage or deformation of the glasses. It may cause bodily injury if you try to open it forcibly when the glasses are jammed in the holder.***

Two types of luggage board levels (if equipped)

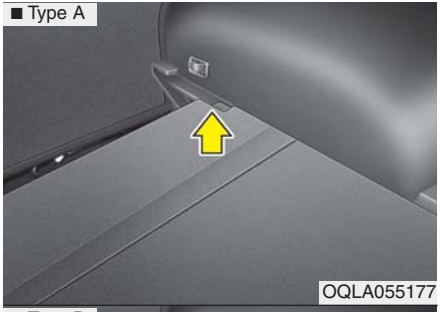

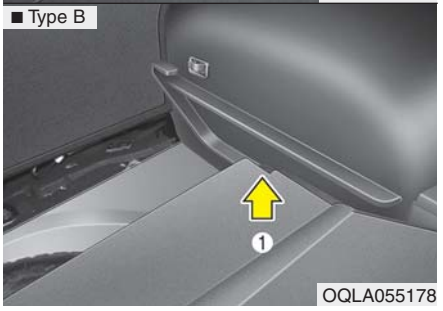

If the vehicle is equipped with a TMK (Tire Mobility Kit) or a temporary tire, you can make the luggage board to flat (Type A) or lower it another level (Type B) for more luggage storage.

When you use the luggage board (Type B), you should put it between guides (1).

However, if the vehicle is equipped with a full spare tire, you can only make the luggage board flat (Type A).

INTERIOR FEATURES

Cup holder

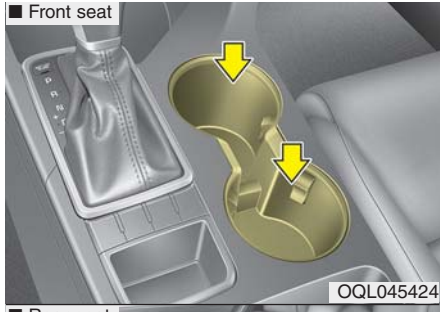

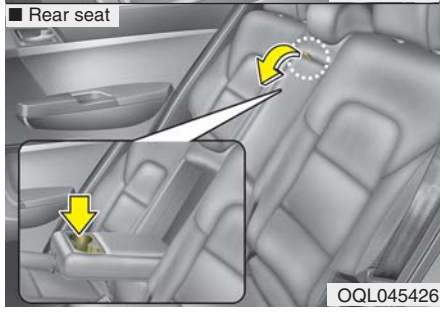

Cups or small beverage cans may be placed in the cup holders.

⚠ WARNING - Hot liquids

Do not place uncovered cups with hot liquid in the cup holder while the vehicle is in motion. If the hot liquid spills, you may burn yourself. Such a burn to the driver could lead to loss of control of the vehicle.

⚠ CAUTION

Keep your drinks sealed while driving to prevent spilling your drink. If liquid spills, it may get into the vehicle's electrical/electronic system and damage electrical/electronic parts.

⚠ CAUTION

When cleaning spilled liquids, do not use heat to dry the cup holders. This may damage the cup holder.

Bottle holder

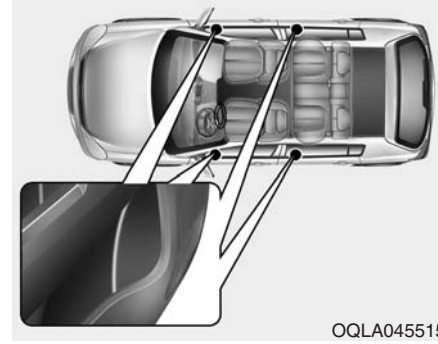

Bottles may be placed in the holder.

✻ NOTICE

Only bottles should be placed in the holder labeled "Bottles Only".

Seat warmer (if equipped)

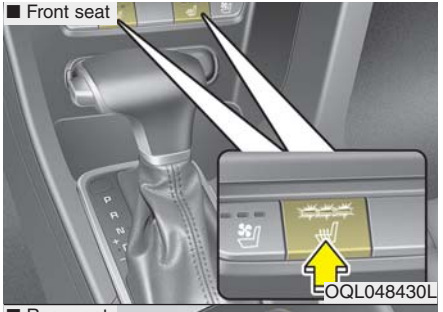

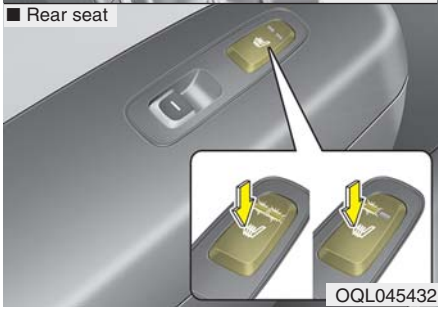

The seat warmer is provided to warm the front seats during cold weather. With the ignition switch in the ON position, push either of the switches to warm the driver's seat or the front passenger's seat.

During mild weather or under conditions where the operation of the seat warmer is not needed, keep the switches in the "OFF" position.

- Each time you press the switch, the temperature setting of the seat will change as follows :

■ Front seat

OFF→HIGH( )→MIDDLE( )→LOW( )

■ Rear seat

OFF→HIGH( )→LOW( )

- The seat warmer defaults to the OFF position whenever the ignition switch is turned on.

✻ NOTICE

With the seat warmer switch in the ON position, the heating system in the seat turns off or on automatically depending on the seat temperature.

⚠ WARNING - Seat warmer burns

The seat warmer may cause burns, even at low temperatures, if used over a long period of time. Never allow passengers who may not be able to take care of themselves to be exposed to the risk of seat heater burns. These include:

1. **Infants, children, elderly or disabled persons, or hospital outpatients**
2. **Persons with sensitive skin or those that burn easily**
3. **Fatigued individuals**
4. **Intoxicated individuals**
5. **Individuals taking medication that can cause drowsiness or sleepiness (sleeping pills, cold tablets, etc.)**

Air ventilation seat (if equipped)

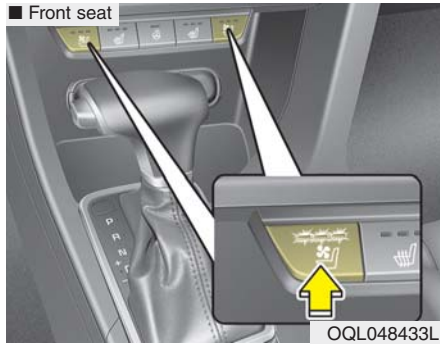

The temperature setting of the seat changes according to the switch position.

- If you want to ventilate your seat cushion, press the switch (blue color).
- Each time you press the button, the airflow will change as follows:

■ Front seat

OFF→HIGH( )→MIDDLE( )→LOW( )

- The seat warmer (with air ventilation) defaults to the OFF position whenever the ignition switch is turned on.

⚠ **CAUTION - Seat damage**

- ***When cleaning the seats, do not use an organic solvent such as paint thinner, benzene, alcohol and gasoline. Doing so may damage the air ventilation seat.***
- ***Do not place heavy or sharp objects on the seat. Those things may damage the air ventilation seat.***
- ***Be careful not to spill liquid such as water or beverages on the seat. If you spill some liquid, wipe the seat with a dry towel. Before using the air ventilation seat, dry the seat completely.***

Sunvisor

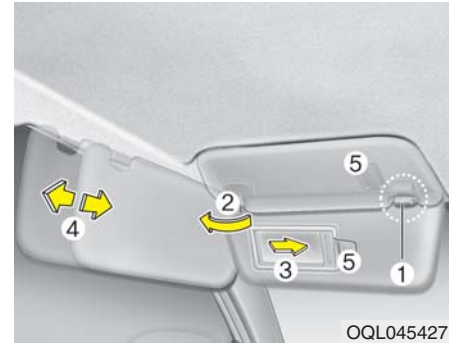

Use the sunvisor to shield direct light through the front or side windows.

To use the sunvisor, pull it downward.

To use the sunvisor for the side window, pull it downward, unsnap it from the bracket (1) and swing it to the side (2).

To use the vanity mirror, pull down the visor and slide the mirror cover (3).

Adjust the sunvisor extension forward or backward (4).

The ticket holder (5) is provided for holding a tollgate ticket.

* The actual sunvisor lamp in the vehicle may differ from the illustration.

⚠ CAUTION - Vanity mirror lamp

If you use the vanity mirror lamp, turn off the lamp before returning the sunvisor to its original position, otherwise it could result in battery discharge and possible sunvisor damage.

Power outlet

■ Front seat

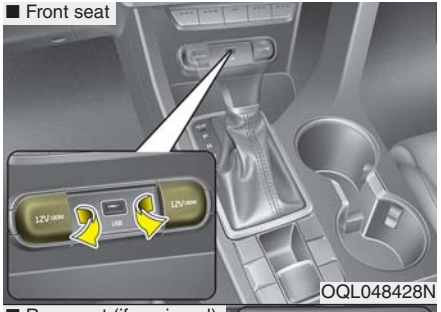

OQL048428N

■ Rear seat (if equipped)

OQL045429

The power outlet is designed to provide power for mobile telephones or other devices designed to operate with vehicle electrical systems. The devices should draw less than 10 amps with the engine running.

- Use the power outlet only when the engine is running and remove the accessory plug after use. Using the accessory plug for prolonged periods of time with the engine off could cause the battery to discharge.
- Only use 12V electric accessories which are less than 10A in electric capacity.
- Adjust the air-conditioner or heater to the lowest operating level when using the power outlet.
- Close the cover when not in use.
- Some electronic devices can cause electronic interference when plugged into a vehicle's power outlet. These devices may cause excessive audio static and malfunctions in other electronic systems or devices used in your vehicle.
- Push the plug in as far as it will go. If good contact is not made, the plug may overheat and the fuse may open.

- Plug in battery equipped electronic devices with reverse current protection. The current from the battery may flow into the vehicle's electri cal/electronic system and cause system malfunction.

⚠ WARNING - Electric shock

Do not put a finger or a foreign element (pen, etc.) into a power outlet and do not touch with a wet hand. You may receive an electric shock.

✻ NOTICE

Do not use aftermarket chargers to charge devices. Only use device certified cables to charge.

USB charger (if equipped)

OQL045482

The USB charger is designed to recharge batteries of small size electrical devices using a USB cable. The electrical devices can be recharged when the Engine Start/Stop button is in ACC/ON/START position.

The battery charging state may be monitored on the electrical device.

Disconnect the USB cable from the USB port after use.

- Some devices are not supported for fast charging but will be charged with normal speed.
- Use the USB charger when the engine is running to prevent battery discharge.
- Only devices that fit the USB port can be used.
- The USB charger can be used only for battery charging purposes.
- Battery chargers cannot be charged.

Wireless smart phone charging system (if equipped)

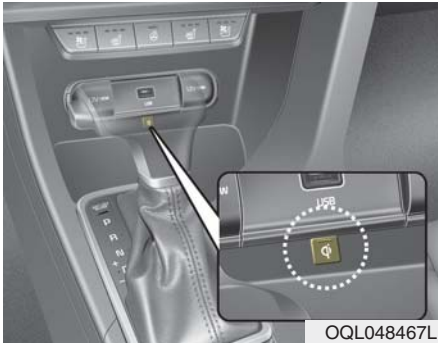

OQL048467L

A wireless smart phone charging system located in front of the center console

Firmly close all doors, and turn the ignition to ACC or IGN ON. To start wireless charging, place the smart phone equipped with wireless charging function on the wireless charging pad and ensure it's enabled within the cluster.

For best wireless charging results, place the smart phone on the center of the charging pad.

The wireless charging system is designed for one smart phone equipped with QI per single usage only. Please refer to the smart phone accessory cover or the smart phone manufacturer homepage to check whether your smart phone supports QI function.

Wireless smart phone charging

1. Remove any object on the smart phone charging pad including the smart key. If there is any foreign object on the pad other than a smart phone, the wireless charging function may not operate properly.
2. Place the smart phone on the center of the wireless charging pad.
3. The indicator light will change to orange once the wireless charging begins. After the charging is complete, the orange light will change to green.
4. You can choose to turn the wireless charging function to either ON or OFF by selecting the USM on the instrument cluster. (Please refer to “Instrument Cluster” for details).

If the wireless charging does not work, gently move your smart phone around the pad until the charging indicator light turns orange. Depending on the smart phone, the charging indicator light may not turn green even after the charging is complete.

If the wireless charging is not functioning properly, the orange light will blink and flash for ten seconds then turn off. In such cases, remove the smart phone from the pad and replace it on the pad again, or double check the charging status.

If you leave the smart phone on the charging pad when the vehicle ignition is in OFF, the vehicle will alert you through warning messages and sound (applicable for vehicles with voice guidance (function) after the 'Good bye' function on the instrument cluster ends.

⚠ WARNING - Distracted driving

Driving while distracted can result in a loss of vehicle control that may lead to an accident, severe bodily injury, and death. The driver's primary responsibility is in the safe and legal operation of a vehicle, and use of any handheld devices, other equipment, or vehicle systems which take the driver's eyes, attention and focus away from the safe operation of a vehicle or which are not permissible by law should never be used during operation of the vehicle.

⚠ CAUTION - Metal in Wireless Charging System

If any metallic object such as a coin is located between the wireless charging system and the smart phone, the charging may be disrupted. Also, the metallic object may heat up and potentially damage the charging system. If there is any metallic object between the smart phone and the charging pad, immediately remove the smart phone. Remove the metallic object after it has cooled down.

✻ NOTICE

- **When the interior temperature of the wireless charging system rises above a set temperature, the wireless charging will cease to function. After the interior temperature drops below the threshold, the wireless charging function will resume.**
- **The wireless charging may not function properly when there is a heavy accessory cover on the smart phone.**
- **The wireless charging will stop when using the wireless smart key search function to prevent radio wave disruption.**
- **The wireless charging will stop when the smart key is moved out of the vehicle with the ignition in ON.**
- **The wireless charging will stop when any of the doors is opened (applicable for vehicles equipped with smart keys).**
- **The wireless charging will stop when the vehicle is turned OFF.**

(Continued)

(Continued)

- **The wireless charging will stop when the smart phone is not in complete contact with the wireless charging pad.**
- **Items equipped with magnetic components such as credit cards, telephone cards, bankbooks or a transportation ticket may become damaged during wireless charging.**
- **Place the smart phone on the center of the charge pad for best results. The smart phone may not charge when placed near the rim of the charging pad. When the smart phone does get charged, it may heat up excessively.**
- **For smart phones without built-in wireless charging system, an appropriate accessory has to be equipped.**
- **Smart phones of some manufacturers may display messages on weak current. This is due to the particular characteristic of the smart phone and does not imply a malfunction on wireless charging function.**

(Continued)

(Continued)

- **The indicator light of some manufacturers' smart phones may still be orange after the smart phone is fully charged. This is due to the particular characteristic of the smart phone and not a malfunction of the wireless charging.**
- **When any smart phone without a wireless charging function or a metallic object is placed on the charging pad, a small noise may sound. This small sound is due to the vehicle discerning compatibility of the object placed on the charging pad. It does not affect your vehicle or the smart phone in any way.**

This device complies with Industry Canada licence-exempt RSS standard(s).

Operation is subject to the following two conditions:

(1) This device may not cause interference, and

(2) This device must accept any interference, including interference that may cause undesired operation of the device.

Coat hook (if equipped)

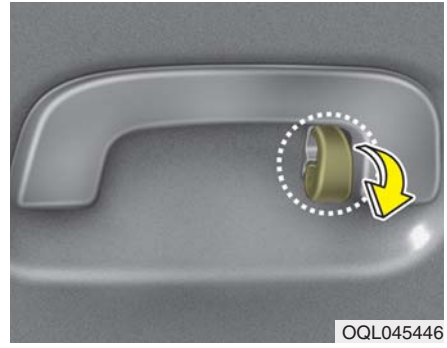

❊ This actual feature may differ from the illustration.

To use the Coat hook, pull down the upper portion of Coat hook.

⚠ CAUTION - Hanging clothing

Do not hang heavy clothes, since those may damage the hook.

⚠ WARNING

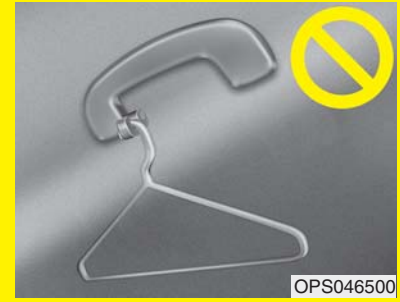

Do not hang other objects such as hangers or hard objects except clothes. Also, do not put heavy, sharp or breakable objects in the pockets of the clothing. In an accident or when the curtain air bag is inflated, it may cause vehicle damage or bodily injury.

Floor mat anchor (s)

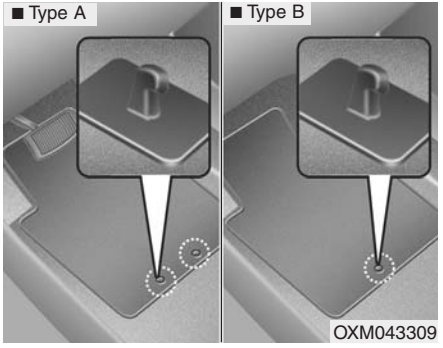

When using a floor mat on the front floor carpet, make sure it attaches to the floor mat anchor(s) in your vehicle. This keeps the floor mat from sliding forward.

⚠ WARNING - After market floor mat

Do not install aftermarket floor mats that are not capable of being securely attached to the vehicle's floor mat anchors.

Unsecured floor mats can interfere with pedal operation.

The following must be observed when installing ANY floor mat to the vehicle.

- Ensure that the floor mats are securely attached to the vehicle's floor mat anchor(s) before driving the vehicle.
- Do not use ANY floor mat that cannot be firmly attached to the vehicle's floor mat anchors.
- Do not stack floor mats on top of one another (e.g. all-weather rubber mat on top of a carpeted floor mat). Only a single floor mat should be installed in each position.

⚠ WARNING

Your vehicle was manufactured with driver's side floor mat anchors that are designed to securely hold the floor mat in place. To avoid any interference with pedal operation, Kia recommends that only the Kia floor mat designed for use in your vehicle be installed.

Luggage net holder

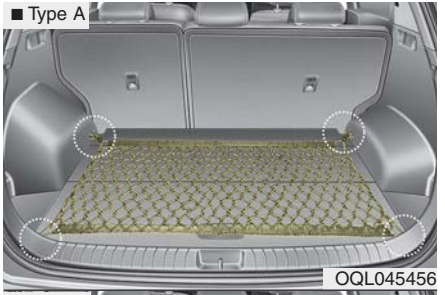

To keep items from shifting in the cargo area, you can use the holders located in the cargo area to attach the luggage net.

If necessary, we recommend that you contact an authorized Kia dealer.

⚠ CAUTION

To prevent damage to the vehicle, care should be taken when carrying fragile or bulky objects in the luggage compartment.

⚠ WARNING - Luggage net

Always keep your face and body out of the luggage net recoil path and avoid using the luggage net when the straps have visible signs of wear or damage. The luggage net can snap and cause injuries.

Cargo security screen (if equipped)

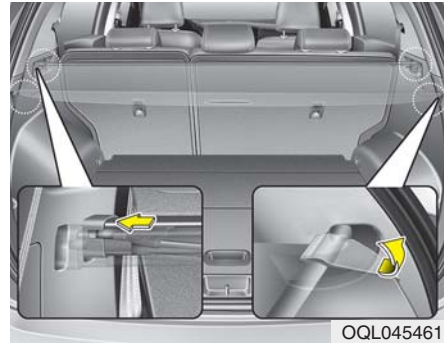

Use the cargo security screen to hide items stored in the cargo area.

To use the cargo security screen, pull the handle backward and insert the edges into the slots.

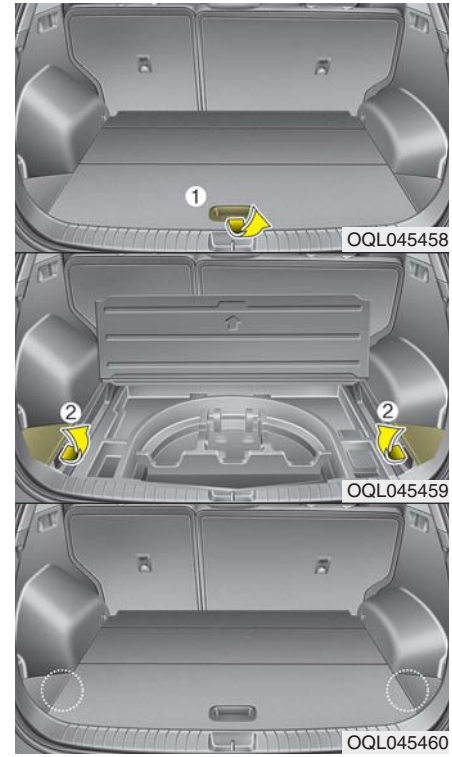

When not in use cargo security screen, follow below steps.

1. Pull up the luggage cover using the handle(1).
2. Pull up a triangle-shaped cover (2).
3. Place the cargo security screen on the lower portion of the cargo area.

⚠ WARNING - Cargo Security Screen

Do not place objects on the cargo security screen. Such objects may be thrown about inside the vehicle and possibly injure vehicle occupants during an accident or when braking.

⚠ CAUTION

Do not place luggage on the cargo security screen. This may cause the security screen to become damaged or malformed.

EXTERIOR FEATURES

Roof rack (if equipped)

If the vehicle has a roof rack, you can load cargo on top of your vehicle.

Crossbars and fixing components needed to install the roof rack on your vehicle may be obtained from an authorized Kia.

✻ NOTICE

- **The crossbars (if equipped) should be placed in the proper load carrying positions prior to placing items onto the roof rack.**
- **If the vehicle is equipped with a sunroof, be sure not to position cargo onto the roof rack in such a way that it could interfere with sunroof operation.**
- **When the roof rack is not being used to carry cargo, the crossbars may need to be repositioned if wind noise is detected.**

⚠ CAUTION - Loading Roof Rack

- ***When carrying cargo on the roof rack, take the necessary precautions to make sure the cargo does not damage the roof of the vehicle.***
- ***When carrying large objects on the roof rack, make sure they do not exceed the overall roof length or width.***
- ***When you are carrying cargo on the roof rack, do not operate the sunroof (if equipped). This can damage the sunroof.***

- The following specification is the maximum weight that can be loaded onto the roof rack. Distribute the load as evenly as possible across the crossbars (if equipped) and roof rack and secure the load firmly.

ROOF RACK	100 kg (220 lbs.) EVENLY DISTRIBUTED

  Loading cargo or luggage in excess of the specified weight limit on the roof rack may damage your vehicle.
- The vehicle center of gravity will be higher when items are loaded onto the roof rack. Avoid sudden starts, braking, sharp turns, abrupt maneuvers or high speeds that may result in loss of vehicle control or rollover resulting in an accident.
- Always drive slowly and turn corners carefully when carrying items on the roof rack. Severe wind updrafts, caused by passing vehicles or natural causes, can cause sudden upward pressure on items loaded on the roof rack. This is especially true when carrying large, flat items such as wood panels or mattresses. This could cause the items to fall off the roof rack and cause damage to your vehicle or others around you.
- To prevent damage or loss of cargo while driving, check frequently before or while driving to make sure the items on the roof rack are securely fastened.

⚠ WARNING - Driving with roof load

Always drive slow and turn corners carefully when carrying items on the roof rack. The vehicle center of gravity will be higher when items are loaded onto the roof rack.

AUDIO SYSTEM

✻ NOTICE

If you install an after market HID head lamp, your vehicle's audio and electronic device may malfunction.

Antenna

Shark fin antenna

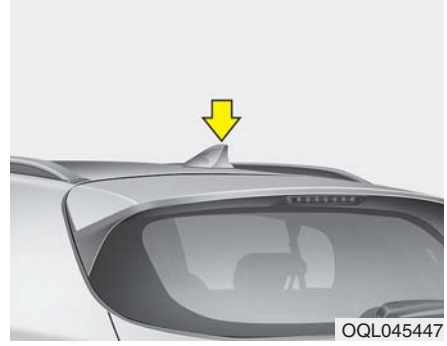

The shark fin antenna will receive the AM, FM broadcast signals and transmit data.

Steering Wheel Audio Controls (If equipped)

The steering wheel may incorporate audio control buttons.

⚠ CAUTION

To avoid damaging the audio controls, do not operate the steering wheel control buttons simultaneously.

VOLUME (+/ –) (1)

- Press the lever upward (+) to increase the volume.
- Press the lever downward (–) to decrease the volume.

SEEK/PRESET (∧/∨) (2)

The SEEK/PRESET button has different functions based on the system mode. Press and hold the button for 1 second or more within the following functions in order to.

RADIO mode

It will function as the AUTO SEEK select button.

USB/iPod® mode

It will function as the FF/REW button.

Press the SEEK/PRESET button for less than 1 second to.

RADIO mode

It will function as the PRESET STATION buttons.

USB/iPod® mode

It will function as TRACK UP/DOWN button.

MODE (3)

Press the button to change audio source.

FM(1~2) ➡ AM ➡ SAT(1~3) ➡ USB (iPod®) ➡ BT Audio ➡ FM...

In addition to mode change, Power on/off can be made by pressing this button when the ignition switch is on ACC or ON.

- Power ON: Press the button when the audio is off
- Power OFF: Press the button for more than 1 second when the audio is on.

MUTE (4)

- Press the button to mute the sound.
- Press the button to turn off the microphone during a telephone call.

Detailed information for audio control buttons are described in the following pages in this section.

⚠ WARNING - Distracted driving

Driving while distracted can result in a loss of vehicle control that may lead to an accident, severe personal injury, and death. The driver's primary responsibility is in the safe and legal operation of a vehicle, and use of any handheld devices, other equipment, or vehicle systems which take the driver's eyes, attention and focus away from the safe operation of a vehicle or which are not permissible by law should never be used during operation of the vehicle.

USB port

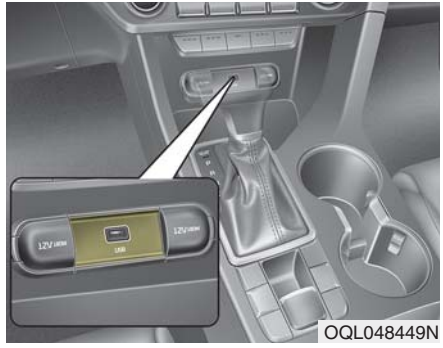

OQL048449N

You can use the USB port to plug in a USB device or iPod®.

✻ NOTICE

When using a portable audio device connected to the power outlet, noise may occur during playback. If this happens, use the power source of the portable audio device.

* iPod® is a Registered trademark of Apple Inc.

Always use the USB charging cable that has been certified by the phone manufacturer. Use of aftermarket cables is not recommended.

How Vehicle Radio Works

FM reception

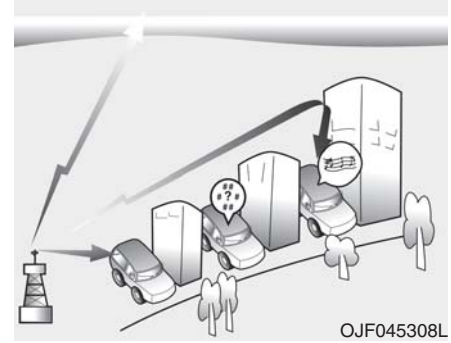
OJF045308L

AM and FM radio signals are broadcast from transmitter towers located around your city. They are intercepted by the radio antenna on your vehicle. This signal is then processed by the radio and sent to your vehicle speakers.

However, in some cases the signal coming to your vehicle may not be strong and clear.

This can be due to factors, such as the distance from the radio station, closeness of other strong radio stations or the presence of buildings, bridges or other large obstructions in the area.

AM reception

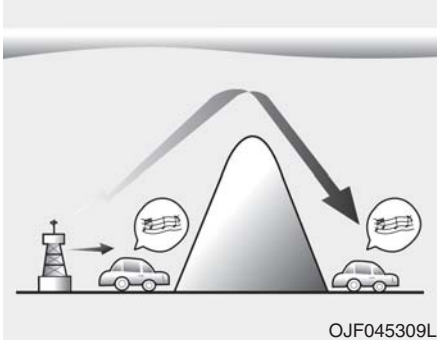

AM broadcasts can be received at greater distances than FM broadcasts. This is because AM radio waves are transmitted at low frequencies. These long distance,low frequency radio waves can follow the curvature of the earth rather than travelling straight. In addition, they curve around obstructions resulting in better signal coverage.

FM radio station

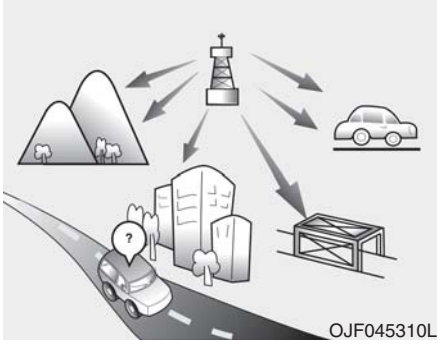

FM broadcasts are transmitted at high frequencies and do not bend to follow the earth's surface. Because of this, FM broadcasts generally begin to fade within short distances from the station. Also, FM signals are easily affected by buildings, mountains, and obstructions. This can lead to undesirable or unpleasant listening conditions which might lead you to believe a problem exists with your radio. The following conditions are normal and do not indicate radio trouble:

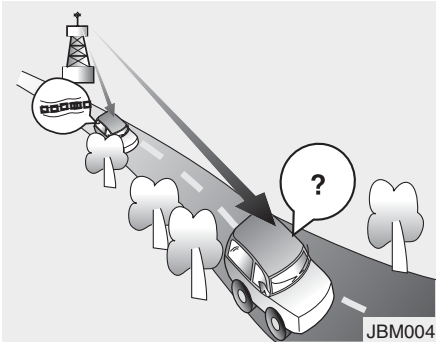

- Fading - As your vehicle moves away from the radio station, the signal will weaken and sound will begin to fade. When this occurs, we suggest that you select another station with a stronger signal.
- Flutter/Static - Weak FM signals or large obstructions between the transmitter and your radio can disturb the signal causing static or fluttering noises to occur. Reducing the treble level may lessen this effect until the disturbance clears.

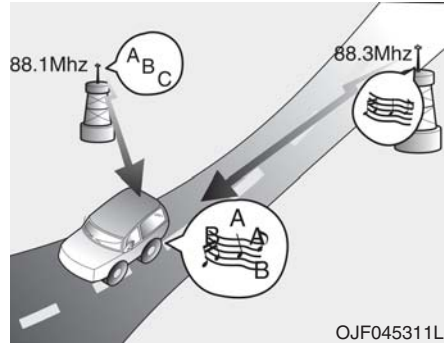

- Station Swapping - As an FM signal weakens, another more powerful signal near the same frequency may begin to play. This is because your radio is designed to lock onto the clearest signal. If this occurs, select another station with a stronger signal.
- Multi-Path Cancellation - Radio signals being received from several directions can cause distortion or fluttering. This can be caused by a direct and reflected signal from the same station, or by signals from two stations with close frequencies. If this occurs, select another station until the condition has passed.

Using a cellular phone or a two-way radio

When a cellular phone is used inside the vehicle, noise may be produced from the audio system. This does not mean that something is wrong with the audio equipment. In such a case, try to operate mobile devices as far from the audio equipment as possible.

When using a communication system such as a cellular phone or a radio set inside the vehicle, a separate external antenna must be fitted. When a cellular phone or a radio set is used with an internal antenna alone, it may interfere with the vehicle's electrical system and adversely affect safe operation of the vehicle.

⚠ WARNING - Cell phone use

Do not use a cellular phone while driving. Stop at a safe and legal location to use a cellular phone.

Declaration of Conformity

IC

This device complies with Industry Canada's licence-exempt RSSs.
Operation is subject to the following two conditions :
(1) This device may not cause interference; and
(2) This device must accept any interference, including interference that may cause undesired operation of the device.

Le présent appareil est conforme aux CNR d'Industrie Canada applicables aux appareils radio exempts de licence.
L'exploitation est autorisée aux deux conditions suivantes : (1) l'appareil ne doit pas produire de brouillage, et (2) l'utilisateur de l'appareil doit accepter tout brouillage radioélectrique subi, même si le brouillage est susceptible d'en compromettre le fonctionnement.

Driving your vehicle

Before driving 5-5
- Before entering vehicle 5-5
- Necessary inspections 5-5
- Before starting 5-5

Key positions 5-7
- Illuminated ignition switch 5-7
- Ignition switch position 5-7
- Starting the engine 5-9

ENGINE START/STOP button 5-11
- Illuminated ENGINE START/STOP button 5-11
- ENGINE START/STOP button position 5-11
- Starting the engine with a smart key 5-13

Automatic transmission 5-15
- Automatic transmission operation 5-15
- Good driving practices 5-22

All Wheel Drive(AWD) 5-23
- Tight corner brake effect 5-24
- All Wheel Drive (AWD) transfer mode selection . . . 5-25
- For safe all wheel drive operation 5-26
- Reducing the risk of a rollover 5-29

Brake system 5-31
- Power brakes 5-31
- Parking brake – Foot type 5-33
- Electronic Parking Brake (EPB) 5-34
- AUTO HOLD 5-41
- Warning messages 5-43
- Anti-lock Brake System (ABS) 5-45
- Electronic Stability Control (ESC) 5-47
- Downhill Brake Control (DBC) 5-51
- Good braking practices 5-53
- Vehicle stability management (VSM) 5-53
- Hill-start Assist Control (HAC) 5-55
- Good braking practices 5-55

Drive mode integrated control system 5-57
- DRIVE mode 5-57

Forward Collision-Avoidance Assist (FCA) (Front view camera only) 5-59
- System setting and activation 5-59
- FCA warning message and system control 5-61
- Brake operation 5-63
- FCA front view camera sensor 5-63
- System malfunction 5-65
- Limitation of the system 5-67

Forward Collision-Avoidance Assist (FCA) (Sensor fusion) 5-74
- System setting and activation 5-74
- FCA warning message and system control 5-76
- Brake operation 5-78
- Detecting sensors (front view camera/front radar) . 5-78
- System malfunction 5-81

• Limitation of the system 5-83
Lane Keeping Assist (LKA). 5-90
• LKA operation. 5-92
• LKA malfunction. 5-95
• LKA system Function Change. 5-96
Blind-Spot Collision Warning (BCW) 5-99
• System description. 5-99
• System setting and activation. 5-100
Driver Attention Warning (DAW). 5-109
• System setting and activation. 5-109
• Resetting the system 5-111
• System standby 5-111
• System malfunction. 5-111
Cruise Control (CC) 5-114
• To set Cruise Control speed 5-115
• To increase Cruise Control set speed. 5-115
• To decrease the cruising speed. 5-116
• To temporarily accelerate with Cruise Control on . 5-116
• To cancel Cruise Control, do one of the following . 5-116
• To resume cruising speed at more than approximately 30 km/h (20 mph) 5-117
• To turn Cruise Control off, do one of the following. 5-117
Smart Cruise Control(SCC) 5-118
• Smart Cruise Control switch 5-120
• Smart Cruise Control speed 5-120
• Smart Cruise Control cancelled. 5-124
• Vehicle to vehicle distance setting 5-125
• When the lane ahead is clear 5-126
• When there is a vehicle ahead of you in your lane. 5-127
• To adjust the sensitivity of Smart Cruise Control . 5-131
• To convert to Cruise Control mode 5-132
• Limitations of the system 5-132
Rear cross-traffic collision warning (RCCW) . . 5-139
• System description. 5-139
• System setting and activation. 5-139
Economical operation 5-148
Special driving conditions 5-150
• Hazardous driving conditions 5-150
• Reducing the risk of a rollover. 5-150
• Rocking the vehicle 5-152
• Smooth cornering 5-152
• Driving at night 5-153
• Driving in the rain 5-153
• Driving in flooded areas 5-154
• Driving off-road 5-154
• Highway driving 5-154
Winter driving 5-156
Snowy or icy conditions 5-156
Use high quality ethylene glycol coolant 5-157
Check battery and cables 5-157

Change to "winter weight" oil if necessary 5-157
Check spark plugs and ignition system 5-157
To keep locks from freezing 5-158
Use approved window washer anti-freeze in system 5-158
Don't let your parking brake freeze. 5-158
Don't let ice and snow accumulate underneath 5-158
Carry emergency equipment 5-158
Trailer Towing 5-159
• Hitches 5-160
• Safety chains 5-160
• Trailer brakes. 5-160
• Driving with a trailer 5-161
• Maintenance when trailer towing 5-164
• If you do decide to pull a trailer 5-165
Vehicle load limit 5-167
• Tire and loading information label 5-167
• Certification label 5-171
Vehicle weight 5-172

Be sure the exhaust system does not leak.

The exhaust system should be checked whenever the vehicle is raised to change the oil or for any other purpose. If you hear a change in the sound of the exhaust or if you drive over something that strikes the underneath side of the vehicle, have the exhaust system checked as soon as possible by an authorized Kia dealer.

⚠ WARNING - Engine exhaust

Do not inhale exhaust fumes or leave your engine running in a enclosed area for a prolonged time. Exhaust fumes contain carbon monoxide, a colorless, odorless gas that can cause unconsciousness and death by asphyxiation.

⚠ WARNING - Open liftgate

Do not drive with the liftgate open. Poisonous exhaust gases can enter the passenger compartment. If you must drive with the liftgate open proceed as follows:

1. **Close all windows.**
2. **Open side vents.**
3. **Set the air intake control at "Fresh", the air flow control at "Floor" or "Face" and the fan at the highest speed.**

BEFORE DRIVING

Before entering vehicle

- Be sure that all windows, outside mirror(s), and outside lights are clean.
- Check the condition of the tires.
- Check under the vehicle for any sign of leaks.
- Be sure there are no obstacles behind you if you intend to back up.

Necessary inspections

Fluid levels, such as engine oil, engine coolant, brake fluid, and washer fluid should be checked on a regular basis, at the exact interval depending on the fluid. Further details are provided in chapter 7, “Maintenance”.

⚠ WARNING - Distracted driving

Focus on the road while driving. The driver's primary responsibility is in the safe and legal operation of the vehicle. Use of any handled devices, other equipment or vehicle systems that distract the drive should not be used during vehicle operation.

Before starting

- Close and lock all doors.
- Position the seat so that all controls are easily reached.
- Buckle your seat belt.
- Adjust the inside and outside rearview mirrors.
- Be sure that all lights work.
- Check all gauges.
- Check the operation of warning lights when the ignition switch is turned to the ON position.
- Release the parking brake and make sure the brake warning light goes out.

For safe operation, be sure you are familiar with your vehicle and its equipment.

⚠ WARNING - Fire risk

When you intend to park or stop the vehicle with the engine on, be careful not to depress the accelerator pedal for a long period of time. It may overheat the engine or exhaust system and cause fire.

⚠ WARNING - Check surroundings

Always check the surrounding areas near your vehicle for people, especially children, before putting a vehicle into D (Drive) or R (Reverse).

⚠ WARNING - Loose objects

Securely store items in your vehicle. When you make a sudden stop or turn the steering wheel rapidly, loose objects may drop on the floor and it could interfere with the operation of the foot pedals, possibly causing an accident.

⚠ WARNING - Proper footwear

Always wear appropriate shoes when operating your vehicle. Unsuitable shoes (high heels, ski boots, sandals, etc.) may interfere with your ability to use the brake and accelerator pedals.

⚠ WARNING - Driving while intoxicated

Do not drive while intoxicated. Drinking and driving is dangerous. Even a small amount of alcohol will affect your reflexes, perceptions and judgment.

Driving while under the influence of drugs is as dangerous as or more dangerous than driving drunk.

KEY POSITIONS (IF EQUIPPED)

Illuminated ignition switch

OQL055065

Whenever a front door is opened, the ignition switch will illuminate for your convenience, provided the ignition switch is not in the ON position. The light will go off immediately when the ignition switch is turned on. It will also go off after about 30 seconds when the door is closed.

Ignition switch position

LOCK

OQL055066

The ignition key can be removed only in the LOCK position.

ACC (Accessory)

The electrical accessories are operative. If difficulty is experienced turning the ignition switch to the ACC position, turn the key while turning the steering wheel right and left to release the tension.

ON

The warning lights can be checked before the engine is started. This is the normal running position after the engine is started.

Do not leave the ignition switch ON if the engine is not running to prevent battery discharge.

START

Turn the ignition switch to the START position to start the engine. The engine will crank until you release the key; then it returns to the ON position. The brake warning light can be checked in this position.

⚠ WARNING

The anti-theft steering column lock (if equipped) is not a substitute for the parking brake. Before leaving the driver's seat, always make sure the shift lever is engaged in P (Park) for automatic transmission, set the parking brake fully and shut the engine off. Unexpected and sudden vehicle movement may occur if these precautions are not taken.

⚠ WARNING - Ignition switch

Never turn the ignition switch to LOCK or ACC while the vehicle is moving. This would result in loss of directional control and braking function, which could cause an accident.

⚠ WARNING - Key holder

Do not place small purses, multiple keys, or other heavy accessories on your vehicle key ring. The driver can accidently push these objects causing the ACC position to change while in motion and disrupt the proper operation of some of the vehicle's safety features.

⚠ WARNING - Leaving the Vehicle

To avoid unexpected or sudden vehicle movement, never leave your vehicle if the transmission is not locked in the P (Park) position and the parking brake is fully engaged. Before leaving the driver's seat, always make sure the shift lever is engaged in P (Park), set the parking brake fully and shut the engine off.

Starting the engine

1. Make sure the parking brake is applied.
2. Place the transmission shift lever in P (Park). Depress the brake pedal fully.

   You can also start the engine when the shift lever is in the N (Neutral) position.
3. Turn the ignition switch to START and hold it there until the engine starts (a maximum of 10 seconds), then release the key.

   It should be started ***without depressing the accelerator.***
4. Do not wait for the engine to warm up while the vehicle remains stationary.

   Start driving at moderate engine speeds. (Steep accelerating and decelerating should be avoided.)

⚠ WARNING - Steering wheel

Never reach for any controls through the steering wheel while the vehicle is in motion. The presence of your hand or arm in this area could cause a loss of vehicle control.

If the engine stalls while you are in motion, do not attempt to move the shift lever to the P (Park) position. If traffic and road conditions permit, you may put the shift lever in the N (Neutral) position while the vehicle is still moving and turn the ignition switch to the START position in an attempt to restart the engine.

⚠ CAUTION - Starter

Do not engage the starter for more than 10 seconds. If the engine stalls or fails to start, wait 5 to 10 seconds before re-engaging the starter. Improper use of the starter may damage it.

Starting and stopping the engine for turbocharger intercooler

1. Do not race or accelerate the engine immediately after starting.

   If the engine is cold, idle for several seconds before sufficient lubrication is ensured in the turbocharger unit.

2. After high speed or extended driving, requiring a heavy engine load, run the engine on idle condition about 1 minute before turning it off.

   This idle time will allow the turbocharger to cool prior to shutting the engine off.

⚠ **CAUTION**

Do not turn off the engine immediately after it has been subjected to a heavy load. Doing so may cause severe damage to the engine or turbo charger unit.

ENGINE START/STOP BUTTON (IF EQUIPPED)

Illuminated ENGINE START/STOP button

OQL055003

Whenever the front door is opened, the ENGINE START/STOP button will illuminate for your convenience. The light will go off after about 30 seconds when the door is closed.

When all entrances are closed, if you lock the vehicle by using the transmitter or the smart key, the light will go off immediately.

ENGINE START/STOP button position

OFF

Not illuminated

To turn off the engine (START/RUN position) or vehicle power (ON position), press the ENGINE START/STOP button with the shift lever in the P (Park) position. When you press the ENGINE START/STOP button without the shift lever in the P (Park) position, the ENGINE START/STOP button will not change to the OFF position but to the ACC position.

In an emergency situation while the vehicle is in motion, you are able to turn the engine off and to the ACC position by pressing the ENGINE START/STOP button for more than 2 seconds or 3 times successively within 3 seconds. If the vehicle is still moving, you can restart the engine without depressing the brake pedal by pressing the ENGINE START/STOP button with the shift lever in the N (Neutral) position.

ACC (Accessory)

Amber

Press the ENGINE START/STOP button while it is in the OFF position without depressing the brake pedal.

If the ENGINE START/STOP button is in the ACC position for more than 1 hour, the button is turned off automatically to prevent battery discharge.

ON

Super red

Press the ENGINE START/STOP button while it is in the ACC position without depressing the brake pedal.

The warning lights can be checked before the engine is started. Do not leave the ENGINE START/STOP button in the ON position for a long time. The battery may discharge, because the engine is not running.

START/RUN

Not illuminated

To start the engine, depress the brake pedal and press the ENGINE START/ STOP button with the shift lever in the P (Park) or the N (Neutral) position. For your safety, start the engine with the shift lever in the P (Park) position.

If you press the ENGINE START/STOP button without depressing the brake pedal for automatic transmission vehicles, the engine will not start and the ENGINE START/STOP button changes as follow:

OFF ➔ ACC ➔ ON ➔ OFF or ACC

✻ NOTICE

If you leave the ENGINE START/STOP button in the ACC or ON position for a long time, the battery will discharge.

⚠ WARNING - Starting vehicle

Never press the ENGINE START/STOP button while the vehicle is in motion except in an emergency. This would result in loss of directional control and braking function, which could cause an accident.

Starting the engine with a smart key

1. Carry the smart key or place it inside the vehicle.
2. Make sure the parking brake is firmly applied
3. Place the transmission shift lever in P (Park). Depress the brake pedal fully.

   You can also start the engine when the shift lever is in the N (Neutral) position.
4. Press the ENGINE START/STOP button while depressing the brake pedal.

   It should be started without depressing the accelerator.
5. Do not wait for the engine to warm up while the vehicle remains stationary.

   Start driving at moderate engine speeds. (Steep accelerating and decelerating should be avoided.)

Starting and stopping the engine for turbocharger intercooler

1. Do not race or accelerate the engine immediately after starting.

   If the engine is cold, idle for several seconds before sufficient lubrication is ensured in the turbocharger unit.
2. After high speed or extended driving, requiring a heavy engine load, idle the engine about 1 minute before turning it off.

   This idle time will allow the turbocharger to cool prior to shutting the engine off.

⚠ CAUTION

Do not turn the engine off immediately after it has been subjected to a heavy load. Doing so may cause severe damage to the engine or turbocharger unit.

- Even if the smart key is in the vehicle, if it is far away from you, the engine may not start.
- When the ENGINE START/STOP button is in the ACC position or above, if any door is opened, the system checks for the smart key. If the smart key is not in the vehicle, a message "key is not in the vehicle" will appear on the LCD display. And if all doors are closed, the chime will sound for 5 seconds. The indicator or warning will turn off while the vehicle is moving. Always have the smart key with you.

⚠ WARNING - Unintended vehicle movement

Never leave the smart key in the vehicle with children or vehicle occupants who are unfamiliar with the vehicle operation. Pushing the ENGINE START/STOP button while the smart key is in the vehicle may result in unintended engine activation and/or unintended vehicle movement.

- If the battery is weak or the smart key does not work correctly, you can start the engine by pressing the engine start/stop button with the smart key.

  The side with the lock button should contact the engine start/stop button directly.

  When you press the engine start/stop button directly with the smart key, the smart key should contact the button at a right angle.

- When the stop lamp fuse is blown, you can't start the engine normally. Replace the fuse with a new one. If it is not possible, you can start the engine by pressing the ENGINE START/STOP button for 10 seconds while it is in the ACC position. The engine can start without depressing the brake pedal. But for your safety always depress the brake pedal before starting the engine.

Do not press the ENGINE START/STOP button for more than 10 seconds except when the stop lamp fuse is blown.

AUTOMATIC TRANSMISSION

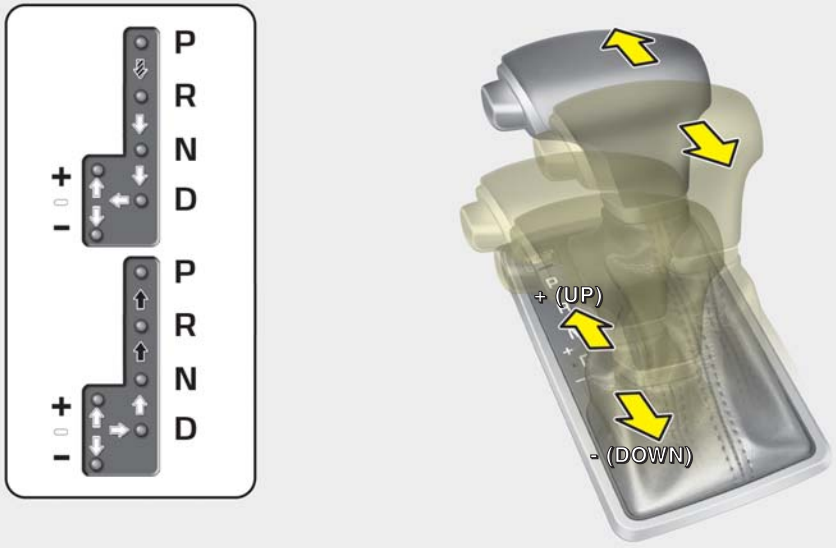

Depress the brake pedal and the lock release button when shifting.

Press the lock release button when shifting.

The shift lever can be shifted freely.

OQL055007

Automatic transmission operation

The automatic transmission has 6 forward speeds and one reverse speed. The individual speeds are selected automatically, depending on the position of the shift lever.

✻ NOTICE

The first few shifts on a new vehicle, if the battery has been disconnected, may be somewhat abrupt. This is a normal condition, and the shifting sequence will adjust after shifts are cycled a few times by the TCM (Transmission Control Module) or PCM (Powertrain Control Module).

For smooth operation, depress the brake pedal and the lock release button when shifting from N (Neutral) to a forward or reverse gear.

⚠ WARNING - Leaving Vehicle

Before leaving the driver's seat, always make sure the shift lever is in the P (Park) position; then set the parking brake fully and shut the engine off. Do not use the P position in place of the parking brake. Always make sure the shift lever is locked in the P position and set the parking brake fully. Unexpected and sudden vehicle movement can occur if these precautions are not followed.

⚠ CAUTION - Transmission

To avoid damage to your transmission, do not accelerate the engine in R (Reverse) or any forward gear position with the brakes on. The transmission may be damaged if you shift into P (Park) while the vehicle is in motion.

When stopped on an incline, do not hold the vehicle with the engine power. Use the service brake or the parking brake.

Transmission ranges

The indicator in the instrument cluster displays the shift lever position when the ignition switch is in the ON position.

P (Park)

Always come to a complete stop before shifting into P (Park). This position locks the transmission and prevents the drive wheels from rotating.

Shifting into P (Park) while the vehicle is in motion will cause the drive wheels to lock which will cause you to lose control of the vehicle.

R (Reverse)

Use this position to drive the vehicle backward.

⚠ CAUTION - Shifting

Always come to a complete stop before shifting into or out of R (Reverse); you may damage the transmission if you shift into R (Reverse) while the vehicle is in motion, except when "Rocking the vehicle" explained in this chapter.

⚠ WARNING

ALWAYS check the surrounding areas near your vehicle for people, especially children, before shifting a vehicle into D (Drive) or R (Reverse).

N (Neutral)

The wheels and transmission are not engaged. The vehicle will roll freely even on the slightest incline unless the parking brake or service brakes are applied.

- Parking in N (Neutral) gear

Follow below steps when parking and you want the vehicle to move when pushed.

1. After parking your vehicle, depress the brake pedal and move the shift lever to [P] with the ignition button in [ON] or while the engine is running.
2. If the parking brake is applied unlock the parking brake.
   - For EPB (Electronic Parking Brake) equipped vehicles, push the brake pedal with the ignition button in [ON] or while the engine is running to disengage the parking brake. If [AUTO HOLD] function is used while driving (If [AUTO HOLD] indicator is on in the cluster), press [AUTO HOLD] switch and [AUTO HOLD] function should be turn off.
3. While pressing the brake pedal, turn the ignition button [OFF].
   - For smart key equipped vehicles, the ignition switch can be moved to [OFF] only when the shift lever is in [P].

4. Change the gear shift lever to [N] (Neutral) while pressing the brake pedal and pushing [SHIFT LOCK RELEASE] button or inserting, pressing down a tool (e.g. flathead screw-driver) into the [SHIFT LOCK RELEASE] access hole at the same time. Then, the vehicle will move when external force is applied.

⚠ WARNING - Parking In Neutral

- **With the exception of parking in neutral gear, always park the vehicle in [P] (Park) for safety and apply the parking brake.**
- **Before parking in [N] (Neutral) gear, make sure the parking ground is level and flat. Do not park in [N] gear on any slopes or gradients. If parked and left in [N], the vehicle may move and cause serious damage or injury.**

D (Drive)

This is the normal forward driving position. The transmission will automatically shift through a 6-gear sequence, providing the best fuel economy and power.

For extra power when passing another vehicle or climbing grades, depress the accelerator fully, at which time the transmission will automatically downshift to the next lower gear.

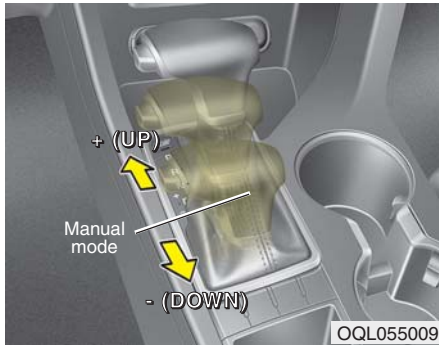

Manual mode

Whether the vehicle is stationary or in motion, manual mode is selected by pushing the shift lever from the D (Drive) position into the manual gate. To return to D (Drive) range operation, push the shift lever back into the main gate.

In manual mode, moving the shift lever backwards and forwards will allow you to make gearshifts rapidly.

Up (+) : Push the lever forward once to shift up one gear.

Down (-) : Pull the lever backwards once to shift down one gear.

- In manual mode, the driver must execute upshifts in accordance with road conditions, taking care to keep the engine speed below the red zone.
- In manual mode, only the 6 forward gears can be selected. To reverse or park the vehicle, move the shift lever to the R (Reverse) or P (Park) position as required.
- In manual mode, downshifts are made automatically when the vehicle slows down. When the vehicle stops, 1st gear is automatically selected.
- In manual mode, when the engine rpm approaches the red zone shift points are varied to upshift automatically.
- To maintain the required levels of vehicle performance and safety, the system may not execute certain gearshifts when the shift lever is operated.
- When driving on a slippery road, push the shift lever forward into the +(up) position. This causes the transmission to shift into the 2nd gear which is better for smooth driving on a slippery road. Push the shift lever to the -(down) side to shift back to the 1st gear.

Paddle shifter (if equipped)

The paddle shifter is available when the shift lever is in the D position or the manual mode.

With the shift lever in the D position

The paddle shifter will operate when the vehicle speed is more than 10 km/h (6.2 mph).

Pull the [+] or [-] paddle shifter once to shift up or down one gear and the system changes from automatic mode to manual mode.

When the vehicle speed is lower than 10 km/h (6.2 mph), if you depress the accelerator pedal for more than 5 seconds or if you shift the shift lever from D (Drive) to manual mode and shift it from manual mode to D (Drive) again, the system changes from manual mode to automatic mode.

With the shift lever in the manual mode

Pull the [+] or [-] paddle shifter once to shift up or down one gear.

✱ NOTICE

If you pull the [+] and [-] paddle shifters at the same time, you cannot shift the gear.

Shift lock system

For your safety, the automatic transmission has a shift lock system which prevents shifting the transmission from P (Park) into R (Reverse) unless the brake pedal is depressed.

To shift the transmission from P (Park) into R (Reverse):

1. Depress and hold the brake pedal.
2. Start the engine or turn the ignition switch to the ON position.
3. Move the shift lever.

If the brake pedal is repeatedly depressed and released with the shift lever in the P (Park) position, a chattering noise & vibration near the shift lever may be heard. It is a normal condition.

⚠ WARNING - Shifting from park

Always fully depress the brake pedal before and while shifting out of the P (Park) position into another position to avoid inadvertent motion of the vehicle which could injure persons in or around the vehicle.

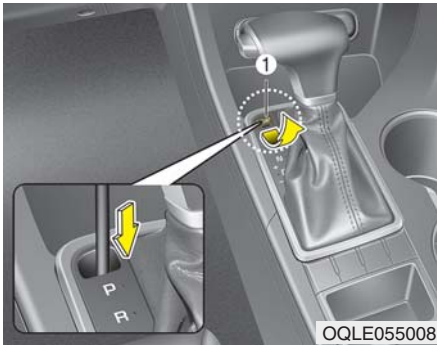

Shift-lock override

If the shift lever cannot be moved from the P (Park) position into R (Reverse) position with the brake pedal depressed, continue depressing the brake, then do the following:

1. Place the ignition switch in the LOCK/OFF position.
2. Apply the parking brake.
3. Carefully remove the cap (1) covering the shift-lock release access hole.
4. Insert a tool (e.g. flathead screwdriver) into the access hole and press down on the tool.
5. Move the shift lever.
6. Remove the tool from the shiftlock override access hole then install the cap.
7. We recommend that the system be inspected by an authorized Kia dealer.

Ignition key interlock system

The ignition key cannot be removed unless the shift lever is in the P (Park) position. Even if the ignition switch is in the LOCK position, the key cannot be removed.

If your vehicle is equipped with ENGINE START/STOP button, the button will not change to the OFF position unless the shift lever is in the P (Park) position.

Good driving practices

- Never move the gear shift lever from P (Park) to any other position with the accelerator pedal depressed.
- Never move the gear shift lever into P (Park) when the vehicle is in motion.
- Slow down before shifting to a lower gear. Otherwise, the lower gear may not be engaged.
- Always use the parking brake. Do not depend on placing the transmission in P (Park) to keep the vehicle from moving.
- Optimum vehicle performance and economy is obtained by smoothly depressing and releasing the accelerator pedal.

⚠ WARNING

When driving uphill or downhill, always shift to D (Drive) for driving forward or shift to R (Reverse) for driving backwards, and check the gear position indicated on the cluster before driving.

Driving in the opposite direction of the selected gear can lead to a dangerous situation by shutting off the engine and affecting the braking performance.

✻ NOTICE - Kickdown Mechanism

Use the kickdown mechanism for maximum acceleration. Depress the accelerator pedal beyond the pressure point. The automatic transmission will shift to a lower gear depending on the engine speed.

Driving up a steep grade from a standing start

To drive up a steep grade from a standing start, depress the brake pedal, shift the shift lever to D (Drive). Select the appropriate gear depending on load weight and steepness of the grade, and release the parking brake. Depress the accelerator gradually while releasing the service brakes.

When accelerating from a stop on a steep hill, the vehicle may have a tendency to roll backwards. Shifting the shift lever into 2 (Second Gear) will help prevent the vehicle from rolling backwards.

ALL WHEEL DRIVE (AWD) (IF EQUIPPED)

■ Type A

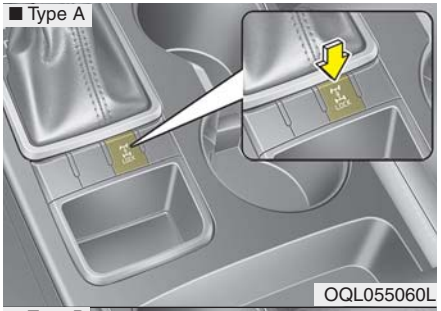

OQL055060L

■ Type B

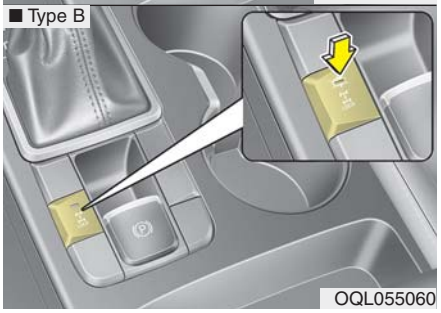

OQL055060

The All Wheel Drive (AWD) system delivers engine power to the front and rear wheels for maximum traction. AWD is useful when extra traction is required on road, such as, when driving on slippery, muddy such as wet, or snow-covered roads.

These vehicles are not designed for challenging off-road use.

It is always important when traveling on unpaved roads that the driver carefully reduces the speed to a level that does not exceed the safe operating speed for those conditions. In general, unpaved roads provide less traction and braking effectiveness than normal road conditions.

* AWD : All Wheel Drive
FWD : Front Wheel Drive

The driver must be especially alert to avoid driving on slopes which tilt the vehicle to either side.

⚠ WARNING - Off road driving

Do not attempt to operate your vehicle under extreme or challenging off road driving conditions. This vehicle was not designed to be driven off road.

✻ NOTICE

If the AWD system warning light ( ) illuminates, this indicates that there is a malfunction in the AWD system.
If this occurs, we recommend that the system be checked by an authorized Kia dealer.

Tight corner brake effect

✻ NOTICE - AWD

When turning sharply on a paved road at low speed while in all wheel drive, steering control will be difficult.

Tight corner brake effect is a unique characteristic of all wheel drive vehicles caused by the difference in tire rotation at the four wheels and the zero-degree alignment of the front wheels and suspension.

Sharp turns at low speeds should be carried out with caution.

All Wheel Drive (AWD) transfer mode selection

Transfer mode	Selection button	Indicator light	Description
AWD AUTO (AWD LOCK is deactivated)		 (Indicator light is not illuminated)	• When driving in AWD AUTO mode, the vehicle operates similar to conventional FWD vehicles under normal operating conditions. However, if the system determines that there is a need for the AWD mode, the engine's driving power is distributed to all four wheels automatically without driver intervention. • When driving on normal roads and pavement, the vehicle moves similar to conventional FWD vehicles.
AWD LOCK		 (Indicator light is illuminated)	• This mode is used for climbing or descending sharp grades, off-road driving, driving on sandy and muddy roads, etc., to maximize traction. • This mode automatically begins to deactivate at speeds above 60 km/h (38 mph) and is shifted to AWD AUTO mode at speed above 60 km/h (38 mph). If the vehicle decelerates to speeds below 60 km/h (38 mph), however, the transfer mode is shifted into AWD LOCK mode again.

✻ NOTICE

- **When driving on normal roads, deactivate the AWD LOCK mode by pushing the AWD LOCK button (the indicator light goes off). Driving on normal roads with AWD LOCK mode(especially, when cornering) may cause mechanical noise or vibration. The noise and vibration will disappear when the AWD LOCK mode is deactivated. Some parts of the power train may be damaged by prolonged driving with the noise and vibration.**
- **When the AWD LOCK mode is deactivated, a shock may be felt as the drive power is delivered entirely to the front wheels. This shock is not a mechanical failure.**

For safe all wheel drive operation

✻ NOTICE - All wheel drive

The road conditions that demand all wheel drive mean all functions of your vehicle are exposed to extreme stress than under normal road conditions. Slow down and be ready for changes in the composition and traction of the surface under your tires. If you have any doubt about the safety of the conditions you are facing, stop and consider the best way to proceed. Do not exceed the ability of yourself or your vehicle to operate safely.

- Do not try to drive in deep standing water or mud since such conditions can stall your engine and clog your exhaust pipes. Do not drive down steep hills since it requires extreme skill to maintain control of the vehicle.

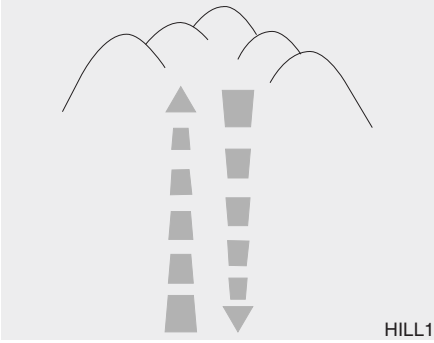
HILL1

- When you are driving up or down hills drive as straight as possible. Use extreme caution in going up or down steep hills, since you may flip your vehicle over depending on the grade, terrain and water/mud conditions.

HILL2

⚠ WARNING - Hills

Driving across the contour of steep hills can be extremely dangerous. This danger can come from slight changes in the wheel angle which can destabilize the vehicle or, even if the vehicle is maintaining stability under power, it can lose that stability if the vehicle stops its forward motion. Your vehicle may roll over without warning and without time for you to correct a mistake that could cause serious injury or death.

- You must consciously take the effort to learn how to corner in a AWD vehicle. Do not rely on your experience in conventional FWD vehicles in choosing safe cornering speed in AWD mode. For starters, you must drive more slowly in AWD.
- Drive carefully when driving on unpaved roads because your vehicle may be damaged by rocks or roots of trees.

⚠ WARNING - AWD

Reduce speed when you turn corners. The center of gravity of AWD vehicles is higher than that of conventional FWD vehicles, making them more likely to roll over when you turn corners too fast.

OQL058127L

⚠ WARNING - Steering wheel

Do not grab the inside of the steering wheel when you are driving off-road. You may hurt your arm by a sudden steering maneuver or from steering wheel rebound due to impact with objects on the ground. You could also lose control of your steering wheel while driving on rough terrain.

- Always hold the steering wheel firmly when you are driving off-road.
- Make sure all passengers are wearing seat belts.

⚠ WARNING - Wind danger

If you are driving in heavy wind, the vehicle's higher center of gravity decreases your steering control capacity and requires you to drive more slowly.

- If you need to drive in the water, stop your vehicle, set your transfer to the AWD LOCK mode and drive at less than 8 km/h (5 mph).

⚠ WARNING - Driving through water

Drive slowly. If you are driving too fast in water, the water can get into the engine compartment and wet the ignition system, causing your vehicle to suddenly stop. If this happens and your vehicle is in a tilted position, your vehicle may roll over.

✻ NOTICE

- **Do not drive in water if the level is higher than the bottom of the vehicle.**
- **Check your brake condition once you are out of mud or water. Press the brake pedal several times as you move slowly until you feel normal braking forces return.**
- **Shorten your scheduled maintenance interval if you drive in off-road conditions such as sand, mud or water (see "Maintenance under severe usage conditions" in section 8). Always wash your vehicle thoroughly after off-road use, especially cleaning the bottom of the vehicle.**
- **Since the driving torque is always applied to the 4 wheels the performance of the AWD vehicle is greatly affected by the condition of the tires. Be sure to equip the vehicle with four tires of the same size and type.**
- **A full time all wheel drive vehicle cannot be towed by an ordinary tow truck. Make sure that the vehicle is placed on a flat bed truck for moving.**

⚠ WARNING - AWD driving

- **Avoid high cornering speed.**
- **Do not make quick steering wheel movements, such as sharp lane changes or fast, sharp turns.**
- **The risk of rollover is greatly increased if you lose control of your vehicle at high speed.**
- **Loss of control often occurs if two or more wheels drop off the roadway and the driver over-steers to re-enter the roadway. In the event your vehicle leaves the roadway, do not steer sharply. Instead, slow down before pulling back into the travel lanes.**

⚠ **CAUTION - Mud or snow**

If one of the front or rear wheels begins to spin in mud, snow, etc. the vehicle can sometimes be driven out by depressing the accelerator pedal further; however, do not run the engine continuously at high rpms to free the vehicle from snow or mud because doing so could damage the AWD system

Reducing the risk of a rollover

This multi-purpose passenger vehicle is defined as a Sports Utility Vehicle (SUV). SUV's have higher ground clearance and a narrower track to make them capable of performing in a wide variety of off-road applications. Specific design characteristics give them a higher center of gravity than ordinary vehicles. An advantage of the higher ground clearance is a better view of the road, which allows you to anticipate problems. They are not designed for cornering at the same speeds as conventional passenger vehicles, any more than low-slung sports vehicles are designed to perform satisfactorily in off-road conditions. There are steps that a driver can

make to reduce the risk of a rollover. If at all possible, avoid sharp turns or abrupt maneuvers, do not load your roof rack with heavy cargo, and never modify your vehicle in any way.

⚠ **WARNING - Replacement tires**

Always use the size and type of tires recommended in the tire section of the manual. Installation of variant tires can affect the safety and performance of your vehicle.

⚠ WARNING - Jacked vehicle

While the full-time AWD vehicle is being raised on a jack, never start the engine or cause the tires to rotate.

There is the danger that rotating tires touching the ground could cause the vehicle to go off the jack and to jump forward.

- Full-time AWD vehicles must be tested on a special four wheel chassis dynamometer.

✻ NOTICE

Never engage the parking brake while performing these tests.

- A full-time AWD vehicle should not be tested on a FWD roll tester. If a FWD roll tester must be used, perform the following:

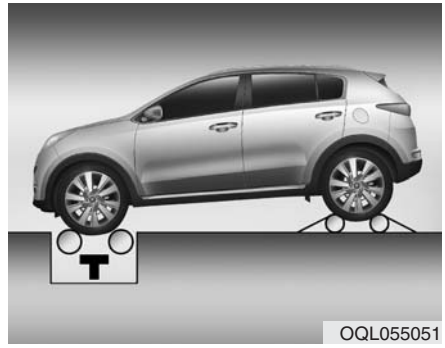

1. Check the tire pressures recommended for your vehicle.
2. Place the front wheels on the roll tester for a speedometer test as shown in the illustration.
3. Release the parking brake.
4. Place the rear wheels on the temporary free roller as shown in the illustration.

⚠ WARNING - Dynamometer testing

Keep away from the front of the vehicle while the vehicle is in gear on the dynamometer. This is very dangerous as the vehicle can jump forward and cause serious injury or death.

✻ NOTICE

When lifting up the vehicle, do not operate front and rear wheel separately. All four wheels should be operated.

✻ NOTICE

If you need to operate the front wheel and rear wheel when lifting up the vehicle, you should release the parking brake.

BRAKE SYSTEM

Power brakes

Your vehicle has power-assisted brakes that adjust automatically through normal usage.

In the event that the power-assisted brakes lose power because of a stalled engine or some other reason, you can still stop your vehicle by applying greater force to the brake pedal than you normally would. The stopping distance, however, will be longer.

When the engine is not running, the reserve brake power is partially depleted each time the brake pedal is applied. Do not pump the brake pedal when the power assist has been interrupted.

Pump the brake pedal only when necessary to maintain steering control on slippery surfaces.

⚠ CAUTION - Brake Pedal

Do not drive with your foot resting on the brake pedal. This will create abnormally high brake temperatures which can cause excessive brake lining and pad wear.

⚠ WARNING - Steep hill braking

Avoid continuous application of the brakes when descending a long or steep hill by shifting to a lower gear. Continuous brake application will cause the brakes to overheat and could result in a temporary loss of braking performance.

Wet brakes may impair the vehicle's ability to safely slow down; the vehicle may also pull to one side when the brakes are applied. Applying the brakes lightly will indicate whether they have been affected in this way. Always test your brakes in this fashion after driving through deep water. To dry the brakes, apply them lightly while maintaining a safe forward speed until brake performance returns to normal.

In the event of brake failure

If service brakes fail to operate while the vehicle is in motion, you can make an emergency stop with the parking brake. The stopping distance, however, will be much greater than normal.

⚠ WARNING - Parking brake

Avoid applying the parking brake to stop the vehicle while it is moving except in an emergency situation. Applying the parking brake while the vehicle is moving at normal speeds can cause a sudden loss of control of the vehicle. If you must use the parking brake to stop the vehicle, use great caution in applying the brake.

Disc brakes wear indicator

When your brake pads are worn and new pads are required, you will hear a high-pitched warning sound from your front brakes or rear brakes. You may hear this sound come and go or it may occur whenever you depress the brake pedal.

Please remember that some driving conditions or climates may cause a brake squeal when you first apply (or lightly apply) the brakes. This is normal and does not indicate a problem with your brakes.

Always replace the front or rear brake pads as pairs.

⚠ CAUTION - Replace brake pads

Do not continue to drive with worn brake pads. Continuing to drive with worn brake pads can damage the braking system and result in costly brake repairs.

⚠ WARNING - Brake wear

Do not ignore high pitched wear sounds from your brakes. If you ignore this audible warning, you will eventually lose braking performance, which could lead to a serious accident.

Parking brake – Foot type (if equipped)

Applying the parking brake

OQL055013

To engage the parking brake, first apply the foot brake and then depress the parking brake pedal down as far as possible.

⚠ CAUTION - Parking brake

Driving with the parking brake applied will cause excessive brake pad (or lining) and brake rotor wear.

Releasing the parking brake

OQL055015

To release the parking brake, depress the parking brake pedal a second time while applying the foot brake. The pedal will automatically extend to the fully released position.

⚠ WARNING - Parking brake use

All vehicles should always have the parking brake fully engaged when parked to avoid inadvertent movement of the vehicles which can injure occupants or pedestrians.

W-75

Check the brake warning light by turning the ignition switch ON (do not start the engine). This light will be illuminated when the parking brake is applied with the ignition switch in the START or ON position.

Before driving, be sure the parking brake is fully released and the brake warning light is off.

If the brake warning light remains on after the parking brake is released while the engine is running, there may be a malfunction in the brake system. Contact an authorized Kia dealer as soon as possible.

If at all possible, cease driving the vehicle immediately. If that is not possible, use extreme caution while operating the vehicle and only continue to drive the vehicle until you can reach a safe location or repair shop.

Electronic Parking Brake (EPB) (if equipped)

Applying the parking brake

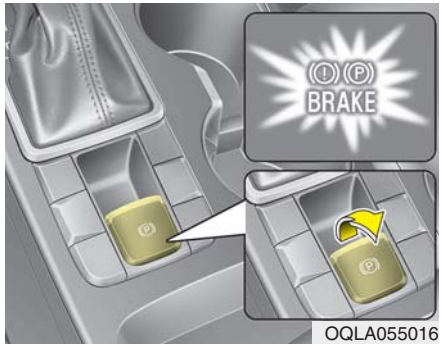

OQLA055016

To apply the EPB (Electronic Parking Brake):

1. Depress the brake pedal.
2. Pull up the EPB switch.

Make sure the warning light comes on.

Also, the EPB is applied automatically if the Auto Hold button is on when the engine is turned off. However, if you press the EPB switch after the engine is turned off, the EPB will not be Applied.

✻ NOTICE

On a steep incline or when pulling a trailer, if the vehicle does not remain at a standstill, do as follows:

1. **Apply the EPB.**
2. **Pull up the EPB switch for more than 3 seconds.**

Do not operate the parking brake/ EPB while the vehicle is moving except in an emergency situation.

✻ NOTICE

A click or electric brake motor whine sound may be heard while operating or releasing the EPB, but these conditions are normal and indicate that the EPB is functioning properly.

Releasing the parking brake

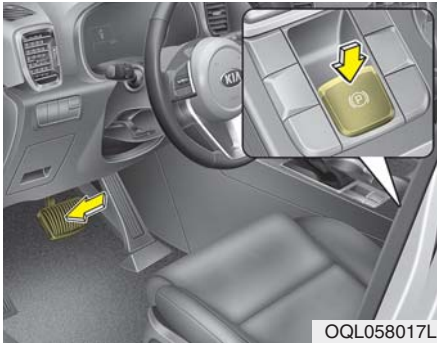

To release the EPB (Electronic Parking Brake), press the EPB switch while doing the following:

- Have the ignition switch or engine start/stop button in the ON position.
- Depress the brake pedal.
- The shift lever must be in P (Park).

Make sure the brake warning light goes off.

To release EPB (Electronic Parking Brake) automatically:

- Shift lever in P (Park)

  With the engine running depress the brake pedal and shift out of P (Park) to R (Reverse) or D (Drive).
- Shift lever in N (Neutral)

  With the engine running depress the brake pedal and shift out of N (Neutral) to R (Reverse) or D (Drive).
- Automatic Transmission

  1. Start the engine.
  2. Fasten the driver's seat belt.
  3. Close the driver's door, engine hood and tailgate.
  4. Depress the accelerator pedal while the shift lever is in R (Rear), D (Drive) or manual mode.

Make sure the brake warning light goes off.

✻ NOTICE

- **For your safety, you can engage the EPB even though the ignition switch or engine stop/start button is in the OFF position, but you cannot release it.**
- **For your safety, depress the brake pedal and release the parking brake manually with the EPB switch when you drive downhill or when backing up the vehicle.**

Do not follow the above procedure when driving on a flat level ground. The vehicle may suddenly move forward.

✻ NOTICE

If the parking brake warning light is still on even though the EPB has been released, have the system checked by an authorized Kia dealer.

⚠ CAUTION

Do not drive your vehicle with the EPB applied. It may cause excessive brake pad and brake rotor wear.

EPB (Electronic Parking Brake) may be automatically applied when:

- The EPB is overheated
- Requested by other systems

✻ NOTICE

For EPB (Electronic Parking Brake) equipped vehicles with AUTO HOLD function used while driving, if the ignition button has been turned OFF, the EPB will be engaged automatically. Therefore, the AUTO HOLD function should be turned off before the ignition button is turned off.

System warning

OJF058249L

- If you try to drive off depressing the accelerator pedal with the EPB applied, but the EPB doesn't release automatically, a warning will sound and a message will appear.
- If the driver's seat belt is not fastened and the engine hood, driver's door or trunk is opened, a warning will sound and a message will appear.
- If there is a problem with the vehicle, a warning may sound and a message may appear.

If the above situation occurs, depress the brake pedal and release EPB by pressing the EPB switch.

⚠ WARNING - Parking Brake Use

All vehicles should always have the parking brake fully engaged when parked to avoid inadvertent movement of the car which can injure occupants or pedestrians.

- A click or electric brake motor whine sound may be heard while operating or releasing the EPB, but these conditions are normal and indicate that the EPB is functioning properly.
- When leaving your keys with a parking lot attendant or valet, make sure to inform him/her how to operate the EPB.
- The EPB may malfunction if you drive with the EPB applied.
- When you automatically release EPB by depressing the accelerator pedal, depress it slowly.

System warning

■ Type A

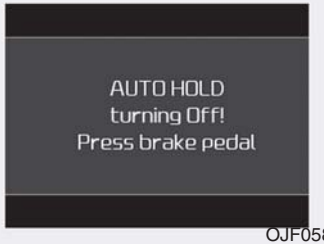

OJF058374L

■ Type B

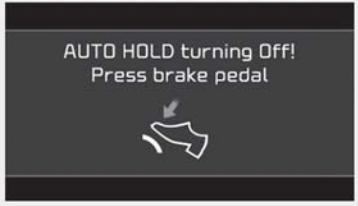

OJF058375L

When the conversion from Auto Hold to EPB is not working properly a warning will sound and a message will appear.

✻ NOTICE

Depress the brake pedal when the above message appears for the Auto Hold and EPB may not activate.

System warning

■ Type A

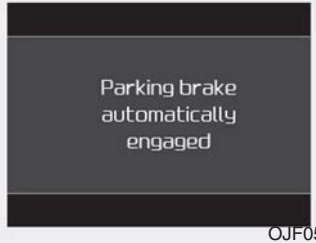

OJF058376L

■ Type B

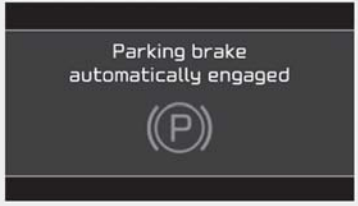

OJF058377L

If the EPB is applied while Auto Hold is activated because of ESC (Electronic Stability Control) signal, a warning will sound and a message will appear.

EPB malfunction indicator (if equipped)

OQL055059

This warning light illuminates if the engine start/stop button is changed to the ON position and goes off in approximately 3 seconds if the system is operation normally.

If the EPB malfunction indicator remains on, comes on while driving, or does not come on when the ignition switch or the engine start/stop button is changed to the ON position, this indicates that the EPB may have malfunctioned.

If this occurs, have your vehicle checked by an authorized Kia dealer as soon as possible.

The EPB malfunction indicator may illuminate when the ESC indicator comes on to indicate that the ESC is not working properly, but it does not indicate a malfunction of the EPB.

- The EPB warning light may illuminate if the EPB switch operates abnormally. Shut the engine off and turn it on again after a few minutes. The warning light will go off and the EPB switch will operate normally. However, if the EPB warning light is still on, have the system checked by an authorized Kia dealer.
- If the parking brake warning light does not illuminate or blinks even though the EPB switch was pulled up, the EPB is not applied.
- If the parking brake warning light blinks when the EPB warning light is on, press the switch, then pull it up. Once more press it back to its original position and pull it back up. If the EPB warning does not go off, have the system checked by an authorized Kia dealer.

Emergency braking

If there is a problem with the brake pedal while driving, emergency braking is possible by pulling up and holding the EPB switch. Braking is possible only while you are holding the EPB switch.

⚠ WARNING

Do not operate the Electronic Parking Brake while the vehicle is moving except in an emergency situation. Applying the Electronic Parking Brake while the vehicle is moving at normal speeds can cause a sudden loss of control of the vehicle. If you must use the Electronic Parking Brake to stop the vehicle, use great caution in applying the brake.

✻ NOTICE

During emergency braking by the EPB, the parking brake warning light will illuminate to indicate that the system is operating.

If you notice a continuous noise or burning smell when the EPB is used for emergency braking, have your vehicle checked by an authorized Kia dealer.

When the EPB (Electronic Parking Brake) is not released

If the EPB does not release normally, take your vehicle to an authorized Kia dealer by loading the vehicle on a flatbed tow truck and have the system checked.

AUTO HOLD (if equipped)

The Auto Hold maintains the vehicle in a standstill even though the brake pedal is not depressed after the driver brings the vehicle to a complete stop by depressing the brake pedal.

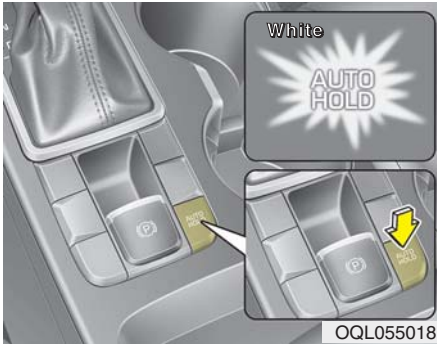

OQL055018

1. Depress the brake pedal, start the engine and then press the Auto Hold button. The white AUTO HOLD indicator will come on indicating the system is in standby.

   Before the Auto Hold will engage, the driver's door, engine hood must be closed and the driver's seat belt must be fastened.

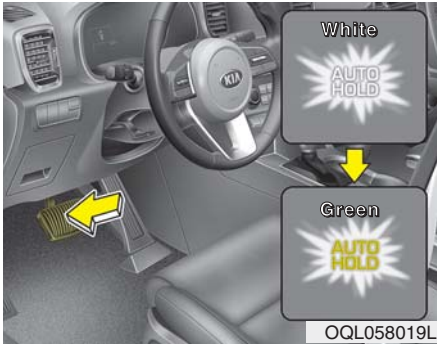

OQL058019L

2. When coming to a complete stop by depressing the brake pedal, the AUTO HOLD indicator changes from white to green indicating the AUTO HOLD is engaged and EPB is applied. The vehicle will remain at a standstill even if you release the brake pedal.
3. If EPB is applied, Auto Hold will be released.

4. If you press the accelerator pedal with the shift lever in D (Drive) or manual mode, the Auto Hold will be released automatically and the vehicle will start to move. The indicator changes from green to white indicating the Auto Hold is in standby and the EPB is released.

When driving off from Auto Hold by depressing the accelerator pedal, always check the surrounding area near your vehicle.

Slowly depress the accelerator pedal for a smooth launch.

Cancel

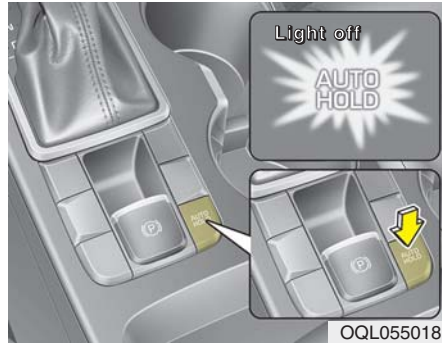

OQL055018

To cancel the Auto Hold operation, press the Auto Hold switch. The AUTO HOLD indicator will go out.

To cancel the Auto Hold operation when the vehicle is at a standstill, press the Auto Hold switch while depressing the brake pedal.

✻ NOTICE

- **The following are conditions when the Auto Hold will not engage (Auto Hold light will not turn green and the Auto Hold system remains in stand by):**
  - **The driver's seat belt is unfastened and driver's door is opened**
  - **The engine hood is opened**
  - **The shift lever is in P (Park) or R (Reverse)**
  - **The EPB is applied**
- **For your safety, the Auto Hold automatically switches to EPB under any of the following conditions (Auto Hold light remains white and the EPB automatically applies):**
  - **The driver's seat belt is unfastened and driver's door is opened**
  - **The engine hood is opened**
  - **The vehicle is in a standstill for more than 10 minutes**
  - **The vehicle is standing on a steep slope**
  - **The vehicle moved several times**

(Continued)

(Continued)

In these cases, the brake warning light comes on, the AUTO HOLD indicator changes from green to white, and a warning sounds and a message will appear to inform you that EPB has been automatically engaged. Before driving off again, press foot brake pedal, check the surrounding area near your vehicle and release parking brake manually with the EPB switch.

- If the AUTO HOLD indicator lights up yellow, the Auto Hold is not working properly. Take your vehicle to an authorized Kia dealer and have the system checked.

⚠ WARNING

To reduce the risk of an accident, do not activate Auto Hold while driving downhill, backing up or parking your vehicle.

If there is a malfunction with the driver's door, engine hood open detection system, the Auto Hold may not work properly.

Take your vehicle to an authorized Kia dealer and have the system checked.

✻ NOTICE

A click or electric brake motor whine sound may be heard while operating or releasing the EPB, but these conditions are normal and indicate that the EPB is functioning properly.

Warning messages

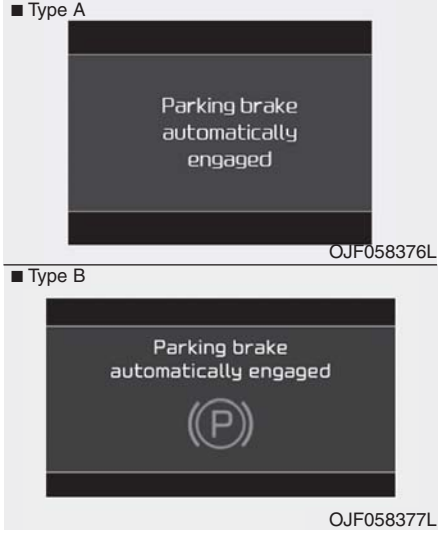

Parking brake automatically locked

When the EPB is applied from Auto Hold, a warning will sound and a message will appear.

■ Type A

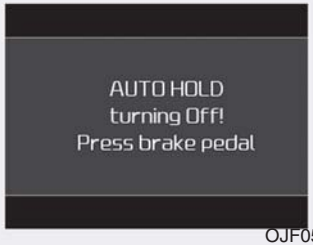

OJF058374L

■ Type B

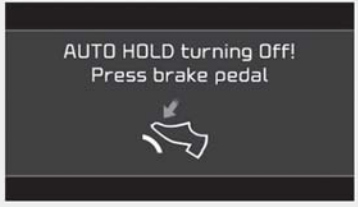

OJF058375L

When the conversion from Auto Hold to EPB is not working properly a warning will sound and a message will appear.

✻ NOTICE

When this message is displayed, the Auto Hold and EPB may not operate. For your safety, depress the brake pedal.

■ Type A

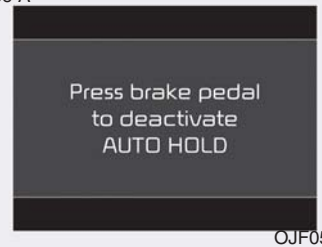

OJF058380L

■ Type B

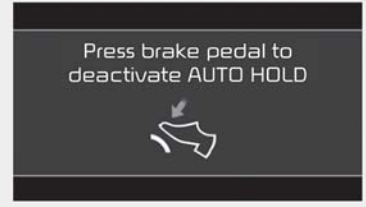

OJF058381L

If you do not apply the brake pedal when you release the Auto Hold by pressing the [AUTO HOLD] switch, a warning will sound and a message will appear.

OQL058371N

AUTO HOLD conditions not met. Close door, hood, and liftgate

When you press the [AUTO HOLD] switch, if the driver's door, engine hood are not closed or the driver's seat belt is unfastened, a warning will sound and a message will appear on the LCD display. At this moment, press the [AUTO HOLD] button after closing the driver's door, engine hood and liftgate.

Anti-lock brake system (ABS)

ABS (or ESC) will not prevent accidents due to improper or dangerous driving maneuvers. Even though vehicle control is improved during emergency braking, always maintain a safe distance between you and objects ahead. Vehicle speeds should always be reduced during extreme road conditions. The vehicle should be driven at reduced speeds in the following circumstances:

- When driving on rough, gravel or snow-covered roads
- When driving with tire chains installed
- When driving on roads where the road surface is pitted or has different surface heights.

Driving in these conditions increases the stopping distance for your vehicle.

The ABS continuously senses the speed of the wheels. If the wheels are going to lock, the ABS system repeatedly modulates the hydraulic brake pressure to the wheels.

When you apply your brakes under conditions which may lock the wheels, you may hear a "tik-tik" sound from the brakes, or feel a corresponding sensation in the brake pedal. This is normal and it means your ABS is active.

In order to obtain the maximum benefit from your ABS in an emergency situation, do not attempt to modulate your brake pressure and do not try to pump your brakes. Press your brake pedal as hard as possible or as hard as the situation allows the ABS to control the force being delivered to the brakes.

✻ NOTICE

A click/clunk type sound may be heard once per ignition cycle in the engine compartment when the vehicle begins to move after the engine is started. These conditions are normal and indicate that the anti-lock brake system is functioning properly.

- Even with the anti-lock brake system, your vehicle still requires sufficient stopping distance. Always maintain a safe distance from the vehicle in front of you.
- Always slow down when cornering. The anti-lock brake system cannot prevent accidents resulting from excessive speeds.
- On loose or uneven road surfaces, operation of the anti-lock brake system may result in a longer stopping distance than for vehicles equipped with a conventional brake system.

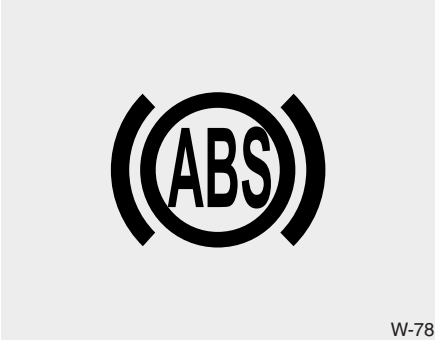

W-78

The ABS warning light will stay on for approximately 3 seconds after the ignition switch is ON. During that time, the ABS will go through self-diagnosis and the light will go off if everything is normal. If the light stays on, you may have a problem with your ABS. Contact an authorized Kia dealer as soon as possible.

- When you drive on a road having poor traction, such as an icy road, and have operated your brakes continuously, the ABS will be active continuously and the ABS warning light may illuminate. Pull your vehicle over to a safe place and stop the engine.
- Restart the engine. If the ABS warning light goes off, then your ABS system is normal. Otherwise, you may have a problem with the ABS. Contact an authorized Kia dealer as soon as possible.

✻ NOTICE

When you jump start your vehicle because of a drained battery, the engine may not run as smoothly and the ABS warning light may turn on at the same time. This happens because of low battery voltage. It does not mean your ABS has malfunctioned.

- **Do not pump your brakes!**
- **Have the battery recharged before driving the vehicle.**

Electronic stability control (ESC)

The Electronic Stability Control (ESC) system is designed to stabilize the vehicle during cornering maneuvers. ESC checks where you are steering and where the vehicle is actually going. ESC applies the brakes at individual wheels and intervenes with engine management system to stabilize the vehicle.

⚠ WARNING

Never drive too fast for the road conditions or too quickly when cornering. Electronic stability control (ESC) will not prevent accidents. Excessive speed in turns, abrupt maneuvers and hydroplaning on wet surfaces can still result in serious accidents. Only a safe and attentive driver can prevent accidents by avoiding maneuvers that cause the vehicle to lose traction. Even with ESC installed, always follow all the normal precautions for driving - including driving at safe speeds for the conditions.

The Electronic stability control (ESC) system is an electronic system designed to help the driver maintain vehicle control under adverse conditions. It is not a substitute for safe driving practices. Factors including speed, road conditions and driver steering input can all affect whether ESC will be effective in preventing a loss of control. It is still your responsibility to drive and corner at reasonable speeds and to leave a sufficient margin of safety.

When you apply your brakes under conditions which may lock the wheels, you may hear a “tik-tik” sound from the brakes, or feel a corresponding sensation in the brake pedal. This is normal and it means your ESC is active.

✻ NOTICE

A click/clunk type sound may be heard once per ignition cycle in the engine compartment when the vehicle begins to move after the engine is started. These conditions are normal and indicate that Electronic stability control (ESC) System is functioning properly.

ESC operation

ESC ON condition

-

- When the ignition is turned ON, ESC and ESC OFF indicator lights illuminate for approximately 3 seconds, then ESC is turned on.
- Select the LCD display → ESC → ESC OFF/ESC OFF (TCS OFF) ESC OFF indicator will illuminate. Select the ESC ON, ESC OFF indicator light will go off.
- When starting the engine, you may hear a slight ticking sound. This is the ESC performing an automatic system self-check and does not indicate a problem.

When operating

When the ESC is in operation, ESC indicator light blinks.

- When the Electronic Stability Control is operating properly, you can feel a slight pulsation in the vehicle. This is only the effect of brake control and indicates nothing unusual.
- When moving out of the mud or slippery road, the engine rpm (revolution per minute) may not increase even if you press the accelerator pedal deeply. This is to maintain the stability and traction of the vehicle and does not indicate a problem.

ESC operation off

ESC OFF state

This car has 2 kinds of ESC off states.

If the engine stops when ESC is off, ESC remains off. Upon restarting the engine, the ESC will automatically turn on again.

OQL058251L

• ESC off state 1

To cancel ESC operation, Select the ESC OFF (TCS OFF) in the ESC. ESC OFF indicator light (ESC OFF) illuminates). At this state, the engine control function does not operate. It means the traction control function does not operate. Brake control function only operates.

OQL058252L

• ESC off state 2

To cancel ESC operation, Select the ESC OFF in the ESC (ESC OFF indicator light (ESC OFF) illuminates. At this state, the engine control function and brake control function do not operate. It means the car stability control function does not operate any more.

Indicator light

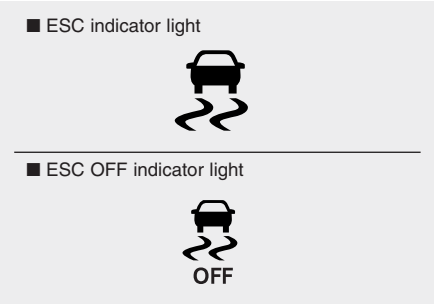

When ignition switch is turned to ON, the indicator light illuminates, then goes off if the ESC system is operating normally.

The ESC indicator light blinks whenever ESC is operating or illuminates when ESC fails to operate.

ESC OFF indicator light comes on when the select the ESC OFF/ESC OFF (TCS OFF) in the LCD display.

⚠ CAUTION

Driving with varying tire or wheel sizes may cause the ESC system to malfunction. When replacing tires, make sure they are the same size as your original tires.

⚠ WARNING

The Electronic Stability Control system is only a driving aid that can only assist you in maintaining control under certain circumstances. Use precautions for safe driving by slowing down on curved, snowy, or icy roads. Drive slowly and don't attempt to accelerate whenever the ESC indicator light is blinking, or when the road surface is slippery.

ESC OFF usage

When driving

- ESC should be turned on for daily driving whenever possible.
- To turn ESC off while driving, select the ESC OFF/ESC OFF(TCS OFF) in the LCD display while driving on a flat road surface.

⚠ WARNING

Never select the ESC OFF/ ESC OFF(TCS OFF) in the LCD display while ESC is operating (ESC indicator light blinks).

✻ NOTICE

- **When operating the vehicle on a dynamometer, ensure that you select the LCD display → ESC → ESC OFF/ESC OFF (TCS OFF) (ESC OFF light illuminated). If the ESC is left on, it may prevent the vehicle speed from increasing, and result in false diagnosis.**
- **Turning the ESC off does not affect ABS or brake system operation.**

Downhill Brake Control (DBC)

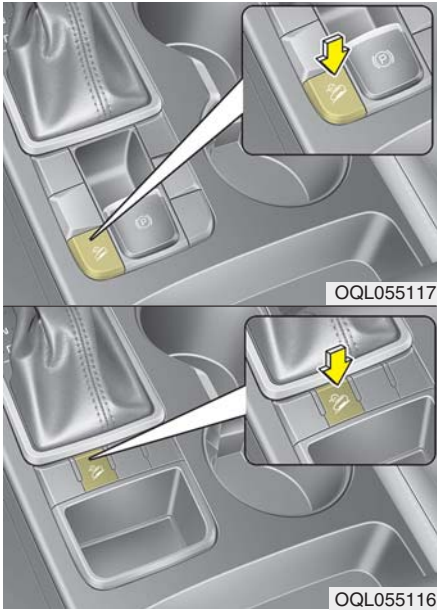

The Downhill Brake Control (DBC) allows the vehicle to descend from a steep hill without depressing the brake pedal. It slows down the vehicle under 8 km/h (5 mph) and allows the driver concentrate on steering the vehicle.

⚠ WARNING

Always turn off the DBC on normal roads. The DBC might activate inadvertently from the standby mode when driving through speed bumps or making sharp curves increasing the risk of a crash.

⚠ WARNING

The DBC is a supplemental system only and is not a substitute for safe driving practices. A driver should not solely rely on this system when descending from a hill and should always be ready to apply the brakes depending on road and traffic conditions.

✻ NOTICE

- **The DBC defaults to the OFF position whenever the ignition switch is placed in the ON position.**
- **Noise or vibration may occur from the brakes when the DBC is activated.**
- **The rear stop light comes on when DBC is activated.**

DBC operation

Mode	Indicator light	Description
Standby	illuminated	Press the DBC button when vehicle speed is under 40 km/h (25 mph). The DBC system will turn ON and enter the standby mode. The system does not turn ON if vehicle speed is over 40 km/h (25 mph).
Activated	blinks	In the standby mode, if vehicle speed is under 35 km/h (22 mph) while driving down a steep hill, the DBC will activate automatically.
Temporarily deactivated	illuminated	In the activated mode, the DBC will temporarily deactivate under the following conditions: • The hill is not steep enough. • The brake pedal or accelerator pedal is depressed. If the above conditions are gone, the DBC will automatically activate again.
OFF	not illuminated	The DBC will turn OFF under the following conditions: • The DBC button is pressed again. • Vehicle speed is over 60 km/h (38 mph).

✻ NOTICE

If the DBC red indicator light illuminates, the system may have overheated or have malfunctioned. When the warning light illuminates even though the DBC system has cooled off, we recommend that the vehicle be checked by an authorized Kia dealer as soon as possible.

✻ NOTICE

- **The DBC may not deactivate on steep inclines even though the brake or accelerator pedal is depressed.**
- **The DBC does not operate when:**
  - The shift lever is in P (Park).
  - The ESC is activated.

Good braking practices

Wet brakes can be dangerous! The brakes may get wet if the vehicle is driven through standing water or if it is washed. Your vehicle will not stop as quickly if the brakes are wet. Wet brakes may cause the vehicle to pull to one side.

⚠ WARNING

Whenever leaving the vehicle or parking, always come to a complete stop and continue to depress the brake pedal. Move the shift lever into the P (Park) position, then apply the parking brake, and place the Engine Start/Stop button in the OFF position.

Vehicles with the parking brake not fully engaged are at risk for moving inadvertently and causing injury to yourself or others.

To dry the brakes, apply the brakes lightly until the braking action returns to normal, taking care to keep the vehicle under control at all times. If the braking action does not return to normal, stop as soon as it is safe to do so and we recommend that you call an authorized Kia dealer for assistance.

DO NOT drive with your foot resting on the brake pedal. Even light, but constant pedal pressure can result in the brakes overheating, brake wear, and possibly even brake failure.

If a tire goes flat while you are driving, apply the brakes gently and keep the vehicle pointed straight ahead while you slow down. When you are moving slowly enough for it to be safe to do so, pull off the road and stop in a safe location.

Keep your foot firmly on the brake pedal when the vehicle is stopped to prevent the vehicle from rolling forward.

Vehicle stability management (VSM)

This system provides further enhancements to vehicle stability and steering responses when a vehicle is driving on a slippery road or a vehicle detects changes in coefficient of friction between right wheels and left wheels when braking.

⚠ WARNING - Tire/ Wheel size

When replacing tires and wheels, make sure they are the same size as the original tires and wheels installed. Driving with varying tire or wheel sizes may diminish any supplemental safety benefits of the VSM system.

VSM operation

When the VSM is in operation, ESC indicator light ( ) blinks.

When the vehicle stability management is operating properly, you can feel a slight pulsation in the vehicle and/or abnormal steering responses (EPS- Electronic Power Steering). This is only the effect of brake and EPS control and indicates nothing unusual.

The VSM does not operate when:

- Driving on a sloping road such as a gradient or incline
- Driving in reverse
- ESC OFF indicator light ( ) remains on the instrument cluster
- EPS indicator light remains on the instrument cluster

VSM operation off

If you select the LCD display → ESC → ESC OFF/ESC OFF (TCS OFF) the VSM will also cancel and the ESC OFF indicator light ( ) illuminates.

To turn on the VSM, select the ESC OFF/ESC OFF (TCS OFF). The ESC OFF indicator light goes out.

⚠ WARNING

- Vehicle stability management

Drive carefully even though your vehicle has Vehicle stability management. It can only assist you in maintaining control under certain circumstances.

Malfunction indicator

The VSM can be deactivated even if you don't cancel the VSM operation by select the ESC OFF/ESC OFF (TCS OFF). It indicates that a malfunction has been detected somewhere in the Electric Power Steering system or VSM system. If the ESC indicator light ( ) or EPS warning light remains on, take your vehicle to an authorized Kia dealer and have the system checked.

✻ NOTICE

- **The VSM is designed to function above approximately 22 km/h (13 mph) on curves.**
- **The VSM is designed to function above approximately 10 km/h (6 mph) when a vehicle is braking on a split-mu surface. A split-mu surface is made of two surfaces which have different friction forces.**

- The Vehicle Stability Management system is not a substitute for safe driving practices but a supplementary function only. It is the responsibility of the driver to always check the speed and the distance to the vehicle ahead. Always hold the steering wheel firmly while driving.
- Your vehicle is designed to activate according to the driver's intention, even with installed VSM. Always follow all the normal precautions for driving at safe speeds for the conditions – including driving in clement weather and on a slippery road.

⚠ WARNING

For maximum protection, always wear your seat belt. No system, no matter how advanced, can compensate for all driver error and/or driving conditions. Always drive responsibly.

Hill-start assist control (HAC)

A vehicle has the tendency to roll back on a steep hill when it starts to go after stopping. The Hill-start Assist Control (HAC) prevents the vehicle from rolling back by applying the brakes automatically for about 2 seconds. The brakes are released when the accelerator pedal is depressed or after about 2 seconds.

The HAC is activated only for about 2 seconds, so when the vehicle is starting off always depress the accelerator pedal.

⚠ WARNING - Maintaining Brake Pressure on Incline

HAC does not replace the need to apply brakes while stopped on an incline. While stopped, make sure you maintain brake pressure sufficient to prevent your vehicle from rolling backward and causing an accident. Don't release the brake pedal until you are ready to accelerate forward.

Good braking practices

- Check to be sure the parking brake is not engaged and the parking brake indicator light is out before driving away.
- Driving through water may get the brakes wet. They can also get wet when the vehicle is washed. Wet brakes can be dangerous! Your vehicle will not stop as quickly if the brakes are wet. Wet brakes may cause the vehicle to pull to one side.

  To dry the brakes, apply the brakes lightly until the braking action returns to normal, taking care to keep the vehicle under control at all times. If the braking action does not return to normal, stop as soon as it is safe to do so and call an authorized Kia dealer for assistance.
- Don't coast down hills with the vehicle out of gear. This is extremely hazardous. Keep the vehicle in gear at all times, use the brakes to slow down, then shift to a lower gear so that engine braking will help you maintain a safe speed.

- Don't "ride" the brake pedal. Resting your foot on the brake pedal while driving can be dangerous because the brakes might overheat and lose their effectiveness. It also increases the wear of the brake components.
- If a tire goes flat while you are driving, apply the brakes gently and keep the vehicle pointed straight ahead while you slow down. When you are moving slowly enough for it to be safe to do so, pull off the road and stop in a safe place.
- If your vehicle is equipped with an Automatic Transmission, don't let your vehicle creep forward. To avoid creeping forward, keep your foot firmly on the brake pedal when the vehicle is stopped.
- Be cautious when parking on a hill. Firmly engage the parking brake and place the shift lever in P (automatic transmission). If your vehicle is facing downhill, turn the front wheels into the curb to help keep the vehicle from rolling. If your vehicle is facing uphill, turn the front wheels away from the curb to help keep the vehicle from rolling. If there is no curb or if it is required by other conditions to keep the vehicle from rolling, block the wheels.
- Under some conditions your parking brake can freeze in the engaged position. This is most likely to happen when there is an accumulation of snow or ice around or near the rear brakes or if the brakes are wet. If there is a risk that the parking brake may freeze, apply it only temporarily while you put the shift lever in P (automatic transmission) and block the rear wheels so the vehicle cannot roll. Then release the parking brake.
- Do not hold the vehicle on an incline with the accelerator pedal. This can cause the transmission to overheat. Always use the brake pedal or parking brake.

DRIVE MODE INTEGRATED CONTROL SYSTEM

DRIVE mode

■ Type A

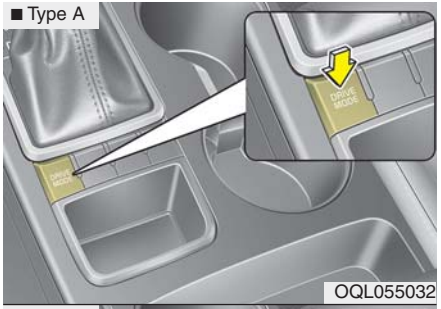

OQL055032

■ Type B

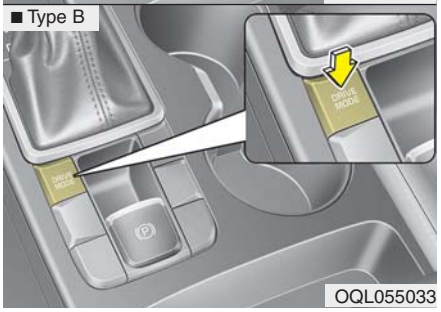

OQL055033

The drive mode may be selected according to the driver's preference or road condition.

The mode changes whenever the DRIVE MODE button is pressed.

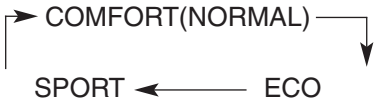

❊ When normal mode is selected, it is not displayed on the cluster.

ECO mode (Active ECO)

ECO

Active ECO helps improve fuel efficiency by controlling certain engine and transmission system operating parameters. Fuel efficiency depends on the driver's driving habits and road condition.

- When the DRIVE MODE button is pressed and the ECO mode is selected, the ECO indicator (green) will illuminate to show that the Active ECO is operating.
- When the Active ECO is activated, it does not turn off even though the engine is restarted again. To turn off the system, press the DRIVE MODE button again.

When Active ECO is activated:

- The acceleration may slightly be reduced even though you depress the accelerator fully.
- The air conditioner performance may be limited
- The shift pattern of the automatic transmission may change.
- The engine noise may get louder.

The above situations are normal conditions when the Active Eco System is activated to improve fuel efficiency.

Limitation of Active ECO operation:

If the following conditions occur while Active ECO is operating, the system operation is limited even though there is no change in the ECO indicator.

- When the coolant temperature is low:

  The system will be limited until engine performance becomes normal.
- When driving up a hill:

  The system will be limited to gain power when driving uphill because the engine torque is restricted.
- When using manual mode:

  The system will be limited according to the shift location.
- When the accelerator pedal is deeply depressed for a few seconds:

  The system will be limited, judging that the driver wants to speed up.

SPORT mode

SPORT

SPORT mode focuses on dynamic driving by automatically adjusting the steering wheel, engine and transmission system.

- When the DRIVE MODE button is pressed and the SPORT mode is selected, the SPORT indicator (yellow) will illuminate.
- When the SPORT mode is activated, and the engine start/stop button is turned off and on it will change to NORMAL mode. To turn on the SPORT mode press DRIVE MODE button again.
  - If the system is activated:
    - It maintains the gear and RPM for some time even though the accelerator pedal is not depressed.
    - Up-shifting is delayed.

✻ NOTICE

In Sport drive mode, the fuel efficiency may decrease.

FORWARD COLLISION-AVOIDANCE ASSIST (FCA) (FRONT VIEW CAMERA ONLY)

Forward Collision-Avoidance Assist system is designed to help detect and monitor the vehicle or pedestrians ahead in the roadway through camera recognition to warn the driver that a collision is imminent, and if necessary, apply emergency braking.

❊ FCA stands for Forward CollisionAvoidance Assist

⚠ WARNING

Take the following precautions when using Forward Collision-Avoidance Assist system:

- **This system is only a supplemental system and it is not intended to, nor does it replace the need for the extreme care and attention of the driver. The sensing range and objects detectable by the sensors are limited. Pay attention to the road conditions at all times.**
- **NEVER drive too fast in accordance with the road conditions or while cornering.**
- **Always drive cautiously to prevent unexpected and sudden situations from occurring. FCA system does not stop the vehicle completely and is only intended to help mitigate an imminent collision.**

System setting and activation

System setting

- The driver can activate FCA by placing the ignition switch to the ON position and by selecting:

'User Settings → Driver Assistance → Forward Collision-Avoidance Assist.' FCA system deactivates, when the driver cancels the system setting.

The warning light illuminates on the LCD display, when you cancel FCA system. The driver can monitor the FCA ON/OFF status on the LCD display. Also, the warning light illuminates when the ESC (Electronic Stability Control) is turned off. When the warning light remains ON with FCA activated, have the system checked by an authorized Kia dealer.

- The driver can select the initial warning activation time on the LCD display. Go to the 'User Settings → Driver Assistance → Forward Collision Warning → Early/Normal/Late'.

  The options for the initial Forward Collision Warning includes the following:

- Early - When this condition is selected, the initial Forward Collision Warning is activated earlier than normal. If the 'Early' condition feels too sensitive, change it into 'Normal'.
- Normal - When this condition is selected, the initial Forward Collision Warning is activated normally.
- Late - When this condition is selected, the initial Forward Collision Warning is activated later than normal. This setting reduces the amount of distance between the vehicle or pedestrians ahead before the initial warning occurs. Select this condition only when traffic is light, and you are driving slowly.

Prerequisite for activation

FCA gets ready to be activated, when FCA is selected on the LCD display, and when the following prerequisites are satisfied.

- The ESC (Electronic Stability Control) is activated.
- Vehicle speed is over 8 km/h (5 mph). (FCA is only activated within a certain speed range.)
- The system detects a vehicle or pedestrian in front, which may collide with your vehicle. (FCA may not be activated or may sound a warning alarm in accordance with the driving situation or vehicle condition.)

❈ FCA may not operate properly according to the frontal situation, the direction and speed of pedestrian.

⚠ WARNING

- **Completely stop the vehicle on a safe location before operating the switch on the steering wheel to activate/deactivate FCA system.**
- **FCA system automatically activates upon placing the Engine Start/Stop button to the ON position. The driver can deactivate FCA by canceling the system setting on the LCD display. To avoid driver distractions, do not attempt to set or cancel FCA while driving the vehicle.**

✻ NOTICE

FCA system automatically deactivates upon canceling the ESC (Electronic Stability Control). When the ESC is canceled, FCA cannot be activated on the LCD display. FCA system warning light will illuminate, but it does not indicate a malfunction of the system.

FCA warning message and system control

FCA system produces warning messages, warning alarms, and emergency braking based on the level of risk of a frontal collision, such as when a vehicle ahead suddenly brakes.

The driver can select the initial warning activation time in the User Settings in the LCD display. The options for the initial Forward Collision Warning include Early, Normal or Late initial warning time.

Collision Warning (1st warning)

OQL058200L

- The warning message appears on the LCD display with the warning alarms.
- The Vehicle may slow down slightly

  - It will operate if the vehicle speed is greater than 8 km/h (5 mph) and less than or equal to 60 km/h (40 mph) on a forward vehicle. (Depending on the condition of the vehicle ahead and the environment surrounding it, the possible maximum operating speed may be reduced.)

- For pedestrians, the vehicle speed is greater than or equal to 8 km/h (5 mph) and less than 60 km/h (40 mph). (Depending on the condition of pedestrians and the surrounding environment the possible maximum operating speed may be reduced.)

- FCA system controls the brakes within certain limit to release shock from the collision.

  - If you select “Warning Only”, FCA system activates and produces only warning alarms in accordance with the collision risk levels. You should control the brake directly because FCA system do not control the brake.

Emergency braking (2nd warning)

OQL058201L

- The warning message appears on the LCD display with the warning alarms.

- The brake control is maximized just before a collision, reducing impact when it strikes a forward vehicle.

  - It will operate if the vehicle speed is greater than 8 km/h (5 mph) and less than or equal to 60 km/h (40 mph) on a forward vehicle. (Depending on the condition of the vehicle ahead and the environment surrounding it, the possible maximum operating speed may be reduced.)

  - For pedestrians, the vehicle speed is greater than or equal to 8 km/h (5 mph) and less than 60 km/h (40 mph). (Depending on the condition of pedestrians and the surrounding environment the possible maximum operating speed may be reduced.)

- FCA system controls the brakes within certain limit to release shock from the collision.

  FCA system controls the maximum brakes just before the collision.

  - If you select “Warning Only”, FCA system activates and produces only warning alarms in accordance with the collision risk levels. You should control the brake directly because FCA system do not control the brake.

Brake operation

- In an urgent situation, the braking system enters into the ready status for prompt reaction to assist the driver in depressing the brake pedal.
- FCA system provides additional braking power for optimum braking performance, when the driver depresses the brake pedal.
- The braking control is automatically deactivated, when the driver sharply depresses the accelerator pedal, or when the driver abruptly operates the steering wheel.
- The braking control is automatically canceled, when risk factors disappear.

⚠ CAUTION

The driver should always pay great caution to vehicle operation, even though there is no warning message or warning alarm.

⚠ WARNING

FCA system cannot avoid all collisions. FCA system might not completely stop the vehicle before a collision, due to ambient, weather and road conditions. The driver has the responsibility to drive safely and control the vehicle.

⚠ WARNING

FCA system operates in accordance with certain risk factors, such as the distance from the vehicle/passer-by in front, the speed of the vehicle/passer-by in front, and the driver's vehicle operation.

FCA front view camera sensor

In order for FCA system to operate properly, always make sure the sensor are clean and free of dirt, snow, and debris.

Dirt, snow, or foreign substances on the lens may adversely affect the sensing performance of the sensor.

✻ NOTICE

- **Never install any accessories or stickers on the front windshield, or tint the front windshield.**
- **Never place any reflective objects (i.e. white paper, mirror) over the dashboard. Any light reflection may cause a malfunction of the system.**
- **Make sure the frontal camera does not get wet.**
- **Never disassemble the camera assembly, or apply any impact on the camera assembly.**
- **Playing the vehicle audio system at high volume may prevent occupants from hearing FCA warnings.**
- **Be careful not to apply unnecessary force on the sensor. If the sensor is forcibly moved out of proper alignment, the system may not operate correctly. In this case, a warning message may not be displayed. In this case, we recommend you have the vehicle inspected by an authorized Kia dealer.**

✻ NOTICE

We recommend you to have the system checked by an authorized Kia dealer when the windshield glass is replaced.

Warning message and warning light

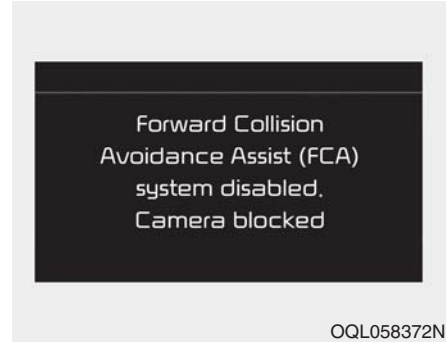

When the sensor is covered with dirt, snow, or debris, FCA system operation may not be able to detect vehicles.

If this occurs, a warning message will appear on the LCD display.

Remove any dirt, snow, or debris and clean the sensor before operating FCA system.

The system will operate normally when such dirt, snow or debris is removed.

However, FCA system may not properly operate in an area (e.g. open terrain), where any objects are not detected after turning ON the engine.

Although a warning message will not appear on the LCD display, FCA may not properly operate.

System malfunction

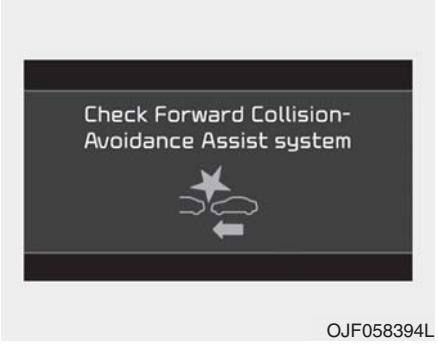

OJF058394L

- When FCA is not working properly, the FCA warning light ( ) will illuminate and the warning message will appear for a few seconds. After the message disappears, the master warning light ( ) will illuminate. In this case, have the vehicle inspected by an authorized Kia dealer.
- FCA warning message may appear along with the illumination of the ESC warning light.

✻ NOTICE

- **FCA system is only a supplemental system for the driver's convenience. The driver has the ultimate responsibility to control and operate the vehicle safely. Do not solely depend on FCA system. Rather, maintain a safe braking distance, and, if necessary, depress the brake pedal to lower the driving speed.**
- **In certain instances and under certain driving conditions, FCA system may activate unintentionally. This initial warning message appears on the LCD display with a warning chime.**
  Also, in certain instances the front radar sensor or camera recognition system may not detect the vehicle or pedestrian ahead. FCA system may not activate and the warning message will not be displayed.

(Continued)

(Continued)

- **FCA system may unnecessarily produce the warning message and the warning alarms. Also, due to the sensing limitation, FCA system may not produce the warning message and the warning alarm at all.**
- **When there is a malfunction with FCA system, the braking control does not operate upon detecting a collision risk even with other braking systems normally operating.**
- **FCA system operates only for the vehicle/pedestrian in front, while driving forward. It does not operate for any animals or vehicles in the opposite direction.**
- **FCA system does not recognize the vehicle, which transversally drives across the crossroad, or the vehicle, which is parked in the transversal direction.**

(Continued)

(Continued)

- **If the vehicle in front stops suddenly, you may have less control of the brake system. Therefore, always keep safe distance between your vehicle and the vehicle in front of you.**
- **FCA system may activate during braking and the vehicle may stop suddenly. And the load in the vehicle may endanger passengers. Therefore, always be mindful of the load volume in the vehicle.**
- **FCA system may not activate if the driver applies the brake pedal to avoid risk of collision.**
- **FCA system does not operate when the vehicle is in reverse. In these circumstances, you must maintain a safe braking distance, and if necessary, depress the brake pedal to reduce the driving speed in order to maintain a safe dis tance.**

(Continued)

(Continued)

- **The regular braking function will operate normally even if There is a problem with the FCA brake control system or other functions. In this case, the braking control will not operate in an imminent collision.**
- **FCA system may not activate according to driving condition, traffic on the road, weather, road condition, etc.**
- **FCA system may not activate in response to all types of vehicles.**

Limitation of the system

Forward Collision-Avoidance Assist system is designed to monitor the vehicle or pedestrians ahead in the roadway through camera recognition to warn the driver that a collision is imminent, and if necessary, apply emergency braking.

In certain situations, the camera may not be able to detect the vehicle or pedestrians ahead. In these cases, FCA system may not operate normally. The driver must pay careful attention in the following situations where FCA operation may be limited.

Recognizing vehicles

The sensor may be limited when:

- The front view camera or front radar sensor is blocked with a foreign object or debris
- The camera lens is contaminated due to tinted, filmed or coated windshield, damaged glass, or stuck of foreign matter (sticker, bug, etc.) on the glass
- Inclement weather such as heavy rain or snow obscures the field of view of the radar sensor or camera
- There is interference by electromagnetic waves
- There is severe irregular reflection from the radar sensor
- The front view camera/front radar sensor recognition is limited
- The vehicle in front is too small to be detected (for example a motorcycle etc.)
- The vehicle in front is an oversize vehicle or trailer that is too big to be detected by the camera recognition system (for example a tractor trailer, etc.)
- The camera's field of view is not well illuminated (either too dark or too much reflection or too much backlight that obscures the field of view)
- The vehicle in front does not have their rear lights or their rear lights does not turned ON or their rear lights are located unusually.
- The outside brightness changes suddenly, for example when entering or exiting a tunnel
- When light coming from a street light or an oncoming vehicle is reflected on a wet road surface such as a puddle in the road
- The field of view in front is obstructed by sun glare
- The vehicle in front is driving erratically

- The vehicle is on unpaved or uneven rough surfaces, or road with sudden gradient changes.
- The vehicle is driven near areas containing metal substances as a construction zone, railroad, etc.• The vehicle drives inside a building, such as a basement parking lot
- The front view camera does not recognize the entire vehicle in front.
- The front view camera is damaged.
- The brightness outside is too low such as when the headlamps are not on at night or the vehicle is going through a tunnel.
- The shadow is on the road by a median strip, trees, etc.
- The vehicle drives through a toll-gate.
- The windshield glass is fogged up; a clear view of the road is obstructed.
- The rear part of the vehicle in front is not normally visible. (the vehicle turns in other direction or the vehicle is overturned.)
- The adverse road conditions cause excessive vehicle vibrations while driving
- The sensor recognition changes suddenly when passing over a speed bump• The vehicle in front is moving longitudinally to the driving direction
- The vehicle in front is stopped longitudinally
- The vehicle in front is driving towards your vehicle or reversing
- You are on a roundabout and the vehicle in front circles
- It is difficult to secure the field of view of the front view camera such as backlight, reflected light, and darkness.
- When the front camera is blocked by continuous washer spray and wiper operation.
- The vehicle in front is a special purpose vehicle, a trailer, or a truck loading with unusual shape of luggage.
- The ambient light is too high or low.
- The front view camera is contaminated by front glass tinting, attaching film, water proof coating, damaged, foreign material such as a sticker, worm, etc.
- When the front view camera (including lens) or front radar is damaged.

- If not using headlamp or using weak light in the night or in a tunnel.
- Backlight is shining in the driving direction of the vehicle. (Including oncoming vehicle headlights.)
- When the rear part of the front vehicle is small or low.
- When a trailer or other vehicle is towing the front vehicle.
- When the ground clearance of the front vehicle is high.
- When a front vehicle makes sudden lane changes unexpectedly.

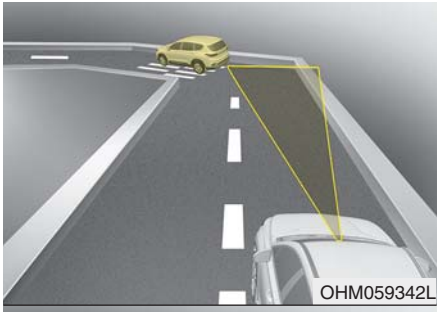

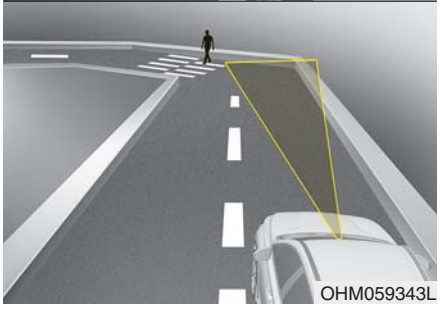

- Driving on a curve

The performance of Forward Collision-Avoidance Assist system may be limited when driving on a curved road.

The front camera recognition system may not detect the vehicle or pedestrian traveling in front on a curved road. This may result in no alarm and braking when necessary.

Always pay attention to road and driving conditions, and if necessary, depress the brake pedal to reduce your driving speed in order to maintain a safe distance.

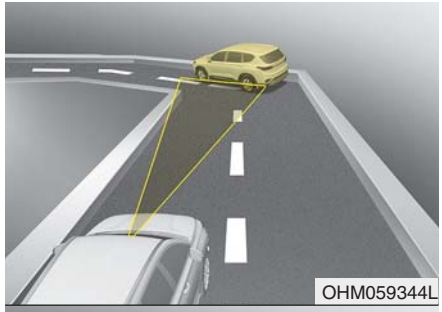

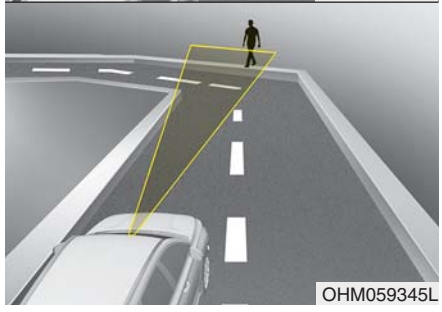

Forward Collision-Avoidance Assist system may recognize a vehicle or pedestrian in the next lane or outside the lane when driving on a curved road.

If this occurs, the system may unnecessarily alarm the driver and apply the brake.

Always pay attention to road and driving conditions, while driving.

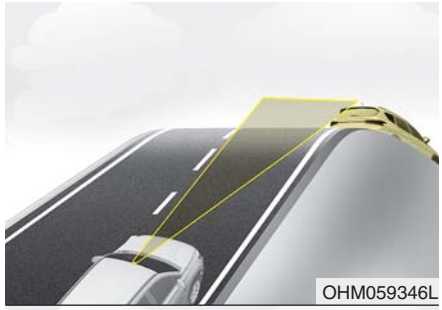

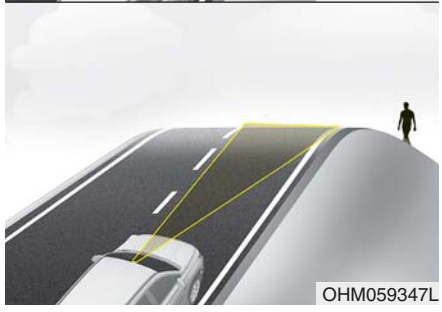

- Driving on a slope

The performance of Forward Collision-Avoidance Assist system may be decreased while driving upward or downward on a slope. The front camera recognition may not detect the vehicle or pedestrian in front.

This may result in unnecessary alarm and braking or no alarm and braking when necessary.

When the system suddenly recognizes the vehicle or pedestrian in front while passing over a slope, you may experience sharp deceleration.

Always keep your eyes forward while driving upward or downward on a slope, and, if necessary, depress the brake pedal to reduce your driving speed in order to maintain distance.

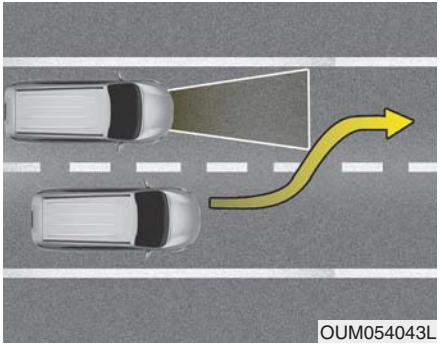
OUM054043L

- Changing lanes

When a vehicle changes lanes in front of you, FCA system may not immediately detect the vehicle, especially if the vehicle changes lanes abruptly. In this case, you must maintain a safe braking distance, and if necessary, depress the brake pedal to reduce your driving speed in order to maintain a safe distance.

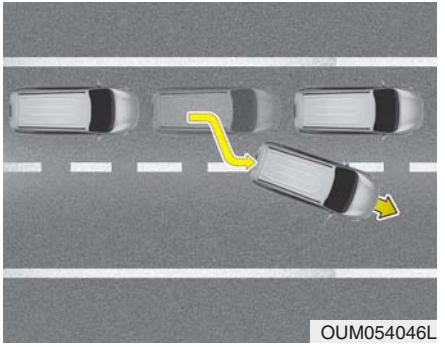
OUM054046L

When driving in stop-and-go traffic, and a stopped vehicle in front of you merges out of the lane, FCA system may not immediately detect the new vehicle that is now in front of you. In this case, you must maintain a safe braking distance, and if necessary, depress the brake pedal to reduce your driving speed in order to maintain a safe distance.

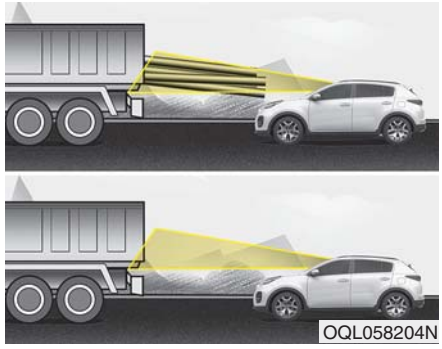

- Recognizing the vehicle

When the vehicle in front has heavy loading extended rearward, or when the vehicle in front has higher ground clearance, it may induce a hazardous situation. Always pay attention to road and driving conditions, while driving and, if necessary, depress the brake pedal to reduce your driving speed in order to maintain distance.

Detecting pedestrians

The sensor may be limited when:

- The pedestrian is not fully detected by the camera recognition system, for example, if the pedestrian is leaning over or is not fully walking upright
- The pedestrian is moving very quickly or appears abruptly in the camera detection area
- The pedestrian is wearing clothing that easily blends into the background, making it difficult to be detected by the camera recognition system
- The outside lighting is too bright (e.g. when driving in bright sunlight or in sun glare) or too dark (e.g. when driving on a dark rural road at night)
- It is difficult to detect and distinguish the pedestrian from other objects in the surroundings, for example, when there is a group of pedestrians, or a large crowd.
- There is an item similar to a person's body structure
- The pedestrian is small
- The pedestrian has impaired mobility
- The sensor recognition is limited
- The camera is blocked with a foreign object or debris
- Inclement weather such as heavy rain or snow obscures the field of view of the radar sensor or camera
- When light coming from a street light or an oncoming vehicle is reflected on a wet road surface such as a puddle in the road
- The field of view in front is obstructed by sun glare
- The windshield glass is fogged up.
- Adverse road conditions cause excessive vehicle vibrations while driving
- When the pedestrian suddenly appears in front of the vehicle
- When there is any other electromagnetic interference
- When a construction area, rail or other metal object is near the pedestrian.

⚠ WARNING

- **Do not use Forward Collision - Avoidance Assist system when towing a vehicle. Application of FCA system while towing may adversely affect the safety of your vehicle or the towing vehicle.**
- **Use extreme caution when the vehicle in front of you has cargo that extends rearward from the cab, or when the vehicle in front of you has higher ground clearance.**
- **FCA system is designed to detect and monitor the vehicle ahead in the roadway through camera recognition. It is not designed to detect bicycles, motorcycles, or smaller**

  wheeled objects such as luggage bags, shopping carts, or strollers.

(Continued)

(Continued)

- **Never try to test the operation of FCA system. Doing so may cause severe injury or death.**
- **When front bumper or windshield glass is replaced or repaired, have the vehicle inspected by an authorized Kia dealer.**

✻ NOTICE

In some instances, FCA system may be cancelled when subjected to electromagnetic interference.

FORWARD COLLISION-AVOIDANCE ASSIST (FCA) (SENSOR FUSION) (IF EQUIPPED)

Forward Collision-Avoidance Assist system is designed to help detect and monitor the vehicle or pedestrians ahead in the roadway through camera recognition to warn the driver that a collision is imminent, and if necessary, apply emergency braking.

❊ FCA stands for Forward Collision-Avoidance Assist.

❊ Sensor fusion (front view camera + front radar) FCA system operates for the vehicle ahead, the pedestrian in front.

⚠ WARNING

Take the following precautions when using Forward Collision-Avoidance Assist system:

- **This system is only a supplemental system and it is not intended to, nor does it replace the need for the extreme care and attention of the driver. The sensing range and objects detectable by the sensors are limited. Pay attention to the road conditions at all times.**
- **NEVER drive too fast in accordance with the road conditions or while cornering.**
- **Always drive cautiously to prevent unexpected and sudden situations from occurring. FCA system does not stop the vehicle completely and is only intended to help mitigate an imminent collision.**

System setting and activation

System setting

- The driver can activate FCA by placing the ignition switch to the ON position and by selecting:

'User Settings → Driver Assistance → Forward Collision-Avoidance Assist.' FCA system deactivates, when the driver cancels the system setting.

The warning light illuminates on the LCD display, when you cancel FCA system. The driver can monitor the FCA ON/OFF status on the LCD display. Also, the warning light illuminates when the ESC (Electronic Stability Control) is turned off. When the warning light remains ON with FCA activated, have the system checked by an authorized Kia dealer.

- The driver can select the initial warning activation time on the LCD display. Go to the 'User Settings → Driver Assistance → Forward Collision Warning → Early/Normal/Late'.

  The options for the initial Forward Collision Warning includes the following:

- Early - When this condition is selected, the initial Forward Collision Warning is activated earlier than normal. If the 'Early' condition feels too sensitive, change it into 'Normal'.
- Normal - When this condition is selected, the initial Forward Collision Warning is activated normally.
- Late - When this condition is selected, the initial Forward Collision Warning is activated later than normal. This setting reduces the amount of distance between the vehicle or pedestrians ahead before the initial warning occurs. Select this condition only when traffic is light, and you are driving slowly.

Prerequisite for activation

FCA gets ready to be activated, when FCA is selected on the LCD display, and when the following prerequisites are satisfied.

- The ESC (Electronic Stability Control) is activated.
- Vehicle speed is over 8 km/h (5 mph). (FCA is only activated within a certain speed range.)
- The system detects a vehicle or a pedestrian in front, which may collide with your vehicle. (FCA may not be activated or may sound a warning alarm in accordance with the driving situation or vehicle condition.)

❊ FCA may not operate properly according to the frontal situation, the direction and speed of pedestrian.

⚠ WARNING

- **Completely stop the vehicle in a safe location before operating the switch on the steering wheel to activate/deactivate FCA system.**
- **FCA system automatically activates upon placing the ignition switch to the ON position. The driver can deactivate FCA system by canceling the system setting on the LCD display or Infotainment System screen.**
- **FCA system automatically deactivates upon canceling the ESC. When the ESC is canceled, FCA system cannot be activated on the LCD display or Infotainment System screen.**

  FCA system warning light will illuminate, which is normal.

FCA warning message and system control

FCA system produces warning messages, warning alarms, and emergency braking based on the level of risk of a frontal collision, such as when a vehicle ahead suddenly brakes.

The driver can select the initial warning activation time in the User Settings in the LCD display. The options for the initial Forward Collision Warning include Early, Normal or Late initial warning time.

Collision Warning (1st warning)

OQL058200L

- The warning message appears on the LCD display with the warning alarms.
- The Vehicle may slow down slightly

  - It will operate if the vehicle speed is greater than 8 km/h (5 mph) and less than or equal to 180 km/h (110 mph) on a forward vehicle. (Depending on the condition of the vehicle ahead and the environment surrounding it, the possible maximum operating speed may be reduced.)

- For pedestrians, the vehicle speed is greater than or equal to 8 km/h (5 mph) and less than 80 km/h (50 mph). (Depending on the condition of pedestrians and bike riders and the surrounding environment the possible maximum operating speed may be reduced.)

- FCA system controls the brakes within certain limit to release shock from the collision.

  - If you select “Warning Only”, FCA system activates and produces only warning alarms in accordance with the collision risk levels. You should control the brake directly because FCA system do not control the brake.

Emergency braking (2nd warning)

OQL058201L

- The warning message appears on the LCD display with the warning alarms.

- The brake control is maximized just before a collision, reducing impact when it strikes a forward vehicle.

  - It will operate if the vehicle speed is greater than 8 km/h (5 mph) and less than or equal to 80 km/h (50 mph) on a forward vehicle. (Depending on the condition of the vehicle ahead and the environment surrounding it, the possible maximum operating speed may be reduced.)

  - For pedestrians, the vehicle speed is greater than or equal to 8 km/h (5 mph) and less than 180 km/h (110 mph). (Depending on the condition of pedestrians and bike riders and the surrounding environment the possible maximum operating speed may be reduced.)

- FCA system controls the brakes within certain limit to release shock from the collision.

  FCA system controls the maximum brakes just before the collision.

  - If you select “Warning Only”, FCA system activates and produces only warning alarms in accordance with the collision risk levels. You should control the brake directly because FCA system do not control the brake.

Brake operation

- In an urgent situation, the braking system enters into the ready status for prompt reaction to assist the driver in depressing the brake pedal.
- FCA system provides additional braking power for optimum braking performance, when the driver depresses the brake pedal.
- The braking control is automatically deactivated, when the driver sharply depresses the accelerator pedal, or when the driver abruptly operates the steering wheel.
- The braking control is automatically canceled, when risk factors disappear.

⚠ CAUTION

The driver should always pay great caution to vehicle operation, even though there is no warning message or warning alarm.

⚠ WARNING

FCA system cannot avoid all collisions. FCA system might not completely stop the vehicle before a collision, due to ambient, weather and road conditions. The driver has the responsibility to drive safely and control the vehicle.

⚠ WARNING

FCA system operates in accordance with certain risk factors, such as the distance from the vehicle/passer-by in front, the speed of the vehicle/passer-by in front, and the driver's vehicle operation.

Detecting sensors (front view camera/front radar)

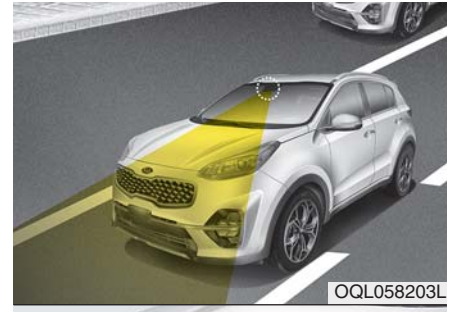
OQL058203L

OQL058202L

In order for FCA system to operate properly, always make sure the sensor or sensor cover are clean and free of dirt, snow, and debris.

Dirt, snow, or foreign substances on the lens may adversely affect the sensing performance of the sensor.

✻ NOTICE

- **Do not apply license plate molding or foreign objects such as a bumper sticker or a bumper guard licence plate molding near the radar sensor. Doing so may adversely affect the sensing performance of the radar.**
- **Always keep the radar sensor and the radar cover clean and free of dirt and debris.**
- **Use only a soft cloth to wash the vehicle. Do not spray pressurized water directly on the sensor or sensor cover.**
- **Be careful not to apply unnecessary force on the radar sensor or sensor cover. If the sensor is forcibly moved out of proper alignment, FCA system may not operate correctly. In this case, a warning message may not be displayed. In this case, we recommend you have the vehicle inspected by an authorized Kia dealer.**

(Continued)

(Continued)

- **If the front bumper becomes damaged in the area around the radar sensor, FCA system may not operate properly. In this case, we recommend you have the vehicle inspected by an authorized Kia dealer.**
- **Use only genuine parts to repair or replace a damaged sensor or sensor cover. Do not paint to the sensor cover.**
- **Never install any accessories or stickers on the front windshield, or tint the front windshield.**
- **Never place any reflective objects (i.e. white paper, mirror) over the dashboard. Any light reflection may cause a malfunction of the system.**
- **Make sure the frontal camera does not get wet.**
- **Never disassemble the camera assembly, or apply any impact on the camera assembly.**
- **Playing the vehicle audio system at high volume may prevent occupants from hearing FCA warnings.**

(Continued)

(Continued)

- **Be careful not to apply unnecessary force on the sensor. If the sensor is forcibly moved out of proper alignment, the system may not operate correctly. In this case, a warning message may not be displayed. In this case, we recommend you have the vehicle inspected by an authorized Kia dealer.**

Warning message and warning light

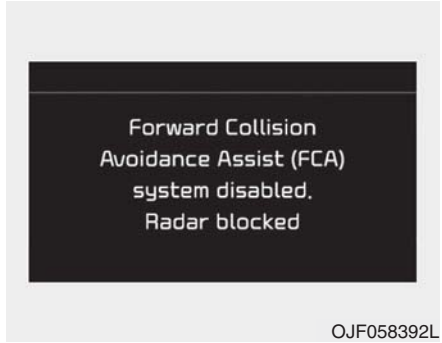

When the cover is covered with dirt, snow, or debris, FCA system operation may not be able to detect vehicles.

If this occurs, a warning message will appear on the LCD display.

Remove any dirt, snow, or debris and clean the sensor before operating FCA system.

The system will operate normally when such dirt, snow or debris is removed.

However, FCA system may not properly operate in an area (e.g. open terrain), where any objects are not detected after turning ON the engine.

Although a warning message will not appear on the LCD display, FCA may not properly operate.

System malfunction

OJF058394L

- When FCA is not working properly, the FCA warning light ( ) will illuminate and the warning message will appear for a few seconds. After the message disappears, the master warning light ( ) will illuminate. In this case, have the vehicle inspected by an authorized Kia dealer.
- The FCA warning message may appear along with the illumination of the ESC warning light.

⚠ WARNING

- **FCA system is only a supplemental system for the driver's convenience. The driver has the ultimate responsibility to control and operate the vehicle safely. Do not solely depend on FCA system. Rather, maintain a safe braking distance, and, if necessary, depress the brake pedal to lower the driving speed.**
- **In certain instances and under certain driving conditions, FCA system may activate unintentionally. This initial warning message appears on the LCD display with a warning chime.**

(Continued)

(Continued)

Also, in certain instances the front radar sensor or camera recognition system may not detect the vehicle or pedestrian ahead. FCA system may not activate and the warning message will not be displayed.

- **FCA system may unnecessarily produce the warning message and the warning alarms. Also, due to the sensing limitation, FCA system may not produce the warning message and the warning alarm at all.**
- **When there is a malfunction with FCA system, the braking control does not operate upon detecting a collision risk even with other braking systems normally operating.**

(Continued)

(Continued)

- FCA system operates only for the vehicle/pedestrian in front, while driving forward. It does not operate for any animals or vehicles in the opposite direction.
- FCA system does not recognize the vehicle, which transversally drives across the crossroad, or the vehicle, which is parked in the transversal direction.
- If the vehicle in front stops suddenly, you may have less control of the brake system. Therefore, always keep safe distance between your vehicle and the vehicle in front of you.
- FCA system may activate during braking and the vehicle may stop suddenly. And the load in the vehicle may endanger passengers. Therefore, always be mindful of the load volume in the vehicle.

(Continued)

(Continued)

- FCA system may not activate if the driver applies the brake pedal to avoid risk of collision.
- FCA system does not operate when the vehicle is in reverse. In these circumstances, you must maintain a safe braking distance, and if necessary, depress the brake pedal to reduce the driving speed in order to maintain a safe dis tance.
- The regular braking function will operate normally even if There is a problem with the FCA brake control system or other functions. In this case, the braking control will not operate in an imminent collision.

(Continued)

(Continued)

- FCA system may not activate according to driving condition, traffic on the road, weather, road condition, etc.
- FCA system may not activate in response to all types of vehicles.

Limitation of the system

FCA system is an assistant system for a driver in a certain risky driving condition and it does not take every responsibility for all risks from driving condition.

FCA system monitors the driving situations through the radar and the camera sensor. Thus, for a situation out of the sensing range, FCA system may not normally operate. The driver should pay great caution in the following situations. FCA system operation may be limited.

Recognizing vehicles

The sensor may be limited when:

- The front view camera or front radar sensor is blocked with a foreign object or debris
- The camera lens is contaminated due to tinted, filmed or coated windshield, damaged glass, or stuck of foreign matter (sticker, bug, etc.) on the glass
- Inclement weather such as heavy rain or snow obscures the field of view of the radar sensor or camera
- There is interference by electromagnetic waves
- There is severe irregular reflection from the radar sensor
- The front view camera/front radar sensor recognition is limited
- The vehicle in front is too small to be detected (for example a motorcycle etc.)
- The vehicle in front is an oversize vehicle or trailer that is too big to be detected by the camera recognition system (for example a tractor trailer, etc.)
- The camera's field of view is not well illuminated (either too dark or too much reflection or too much backlight that obscures the field of view)
- The vehicle in front does not have their rear lights or their rear lights does not turned ON or their rear lights are located unusually.
- The outside brightness changes suddenly, for example when entering or exiting a tunnel
- When light coming from a street light or an oncoming vehicle is reflected on a wet road surface such as a puddle in the road
- The field of view in front is obstructed by sun glare
- The vehicle in front is driving erratically
- The vehicle is on unpaved or uneven rough surfaces, or road with sudden gradient changes.
- The vehicle is driven near areas containing metal substances as a construction zone, railroad, etc.

- The vehicle drives inside a building, such as a basement parking lot
- The front view camera does not recognize the entire vehicle in front.
- The front view camera is damaged.
- The brightness outside is too low such as when the headlamps are not on at night or the vehicle is going through a tunnel.
- The shadow is on the road by a median strip, trees, etc.
- The vehicle drives through a tollgate.
- The windshield glass is fogged up; a clear view of the road is obstructed.
- The rear part of the vehicle in front is not normally visible. (the vehicle turns in other direction or the vehicle is overturned.)
- The adverse road conditions cause excessive vehicle vibrations while driving
- The sensor recognition changes suddenly when passing over a speed bump
- The vehicle in front is moving longitudinally to the driving direction
- The vehicle in front is stopped longitudinally
- The vehicle in front is driving towards your vehicle or reversing
- You are on a roundabout and the vehicle in front circles
- It is difficult to secure the field of view of the front view camera such as backlight, reflected light, and darkness.
- When the front camera is blocked by continuous washer spray and wiper operation.
- The vehicle in front is a special purpose vehicle, a trailer, or a truck loading with unusual shape of luggage.
- The ambient light is too high or low.
- The front view camera is contaminated by front glass tinting, attaching film, water proof coating, damaged, foreign material such as a sticker, worm, etc.
- When the front view camera (including lens) or front radar is damaged.
- If not using headlamp or using weak light in the night or in a tunnel.
- Backlight is shining in the driving direction of the vehicle. (Including oncoming vehicle headlights.)
- When the rear part of the front vehicle is small or low.
- When a trailer or other vehicle is towing the front vehicle.
- When the ground clearance of the front vehicle is high.
- When a front vehicle makes sudden lane changes unexpectedly.

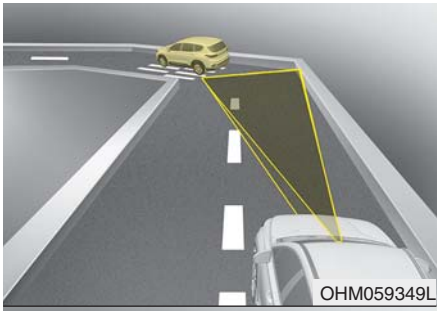

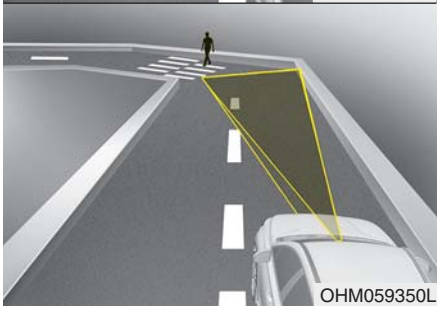

- Driving on a curve

The performance of Forward Collision-Avoidance Assist system may be limited when driving on a curved road.

The front camera or radar sensor recognition system may not detect the vehicle or pedestrian traveling in front on a curved road.

This may result in no alarm and braking when necessary.

Always pay attention to road and driving conditions, and if necessary, depress the brake pedal to reduce your driving speed in order to maintain a safe distance.

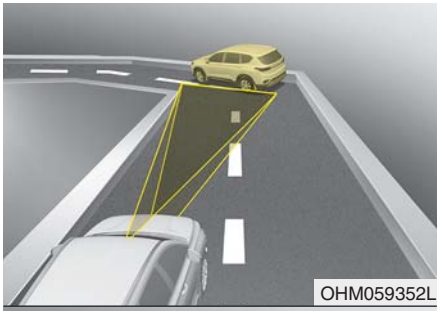

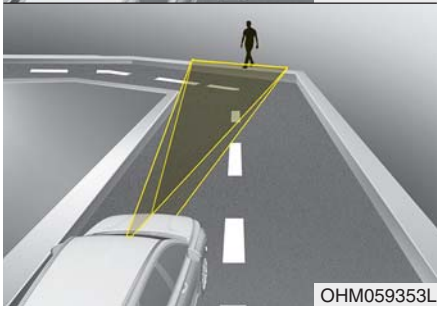

Forward Collision-Avoidance Assist system may recognize a vehicle or pedestrian in the next lane or outside the lane when driving on a curved road.

If this occurs, the system may unnecessarily alarm the driver and apply the brake.

Always pay attention to road and driving conditions, while driving.

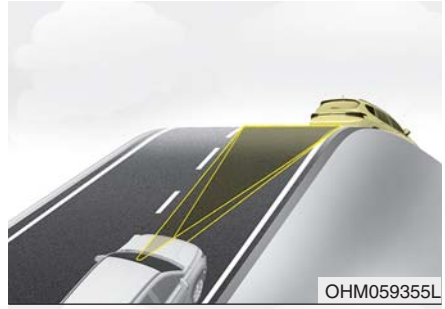

- Driving on a slope

The performance of Forward Collision-Avoidance Assist system may be decreased while driving upward or downward on a slope. The front camera or front radar sensor recognition may not detect the vehicle or pedestrian in front.

This may result in unnecessary alarm and braking or no alarm and braking when necessary.

When the system suddenly recognizes the vehicle or pedestrian in front while passing over a slope, you may experience sharp deceleration.

Always keep your eyes forward while driving upward or downward on a slope, and, if necessary, depress the brake pedal to reduce your driving speed in order to maintain distance.

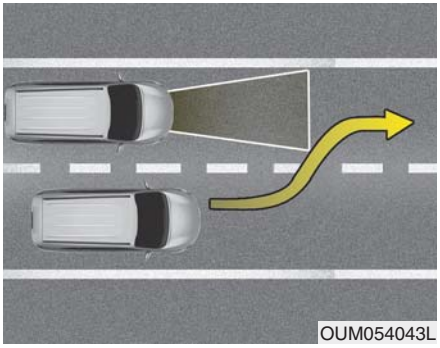

- Changing lanes

When a vehicle changes lanes in front of you, FCA system may not immediately detect the vehicle, especially if the vehicle changes lanes abruptly. In this case, you must maintain a safe braking distance, and if necessary, depress the brake pedal to reduce your driving speed in order to maintain a safe distance.

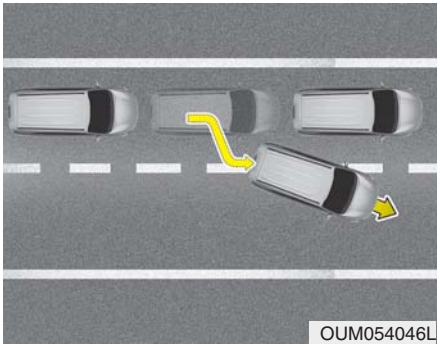

When driving in stop-and-go traffic, and a stopped vehicle in front of you merges out of the lane, FCA system may not immediately detect the new vehicle that is now in front of you. In this case, you must maintain a safe braking distance, and if necessary, depress the brake pedal to reduce your driving speed in order to maintain a safe distance.

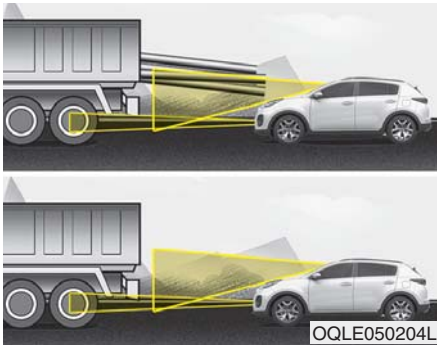

- Recognizing the vehicle

When the vehicle in front has heavy loading extended rearward, or when the vehicle in front has higher ground clearance, it may induce a hazardous situation. Always pay attention to road and driving conditions, while driving and, if necessary, depress the brake pedal to reduce your driving speed in order to maintain distance.

Detecting pedestrians

The sensor may be limited when:

- The pedestrian is not fully detected by the camera recognition system, for example, if the pedestrian is leaning over or is not fully walking upright
- The pedestrian is moving very quickly or appears abruptly in the camera detection area
- The pedestrian is wearing clothing that easily blends into the background, making it difficult to be detected by the camera recognition system
- The outside lighting is too bright (e.g. when driving in bright sunlight or in sun glare) or too dark (e.g. when driving on a dark rural road at night)
- It is difficult to detect and distinguish the pedestrian from other objects in the surroundings, for example, when there is a group of pedestrians, or a large crowd.
- There is an item similar to a person's body structure
- The pedestrian is small
- The pedestrian has impaired mobility
- The sensor recognition is limited
- The radar sensor or camera is covered with a foreign object or debris
- Inclement weather such as heavy rain or snow obscures the field of view of the radar sensor or camera
- When light coming from a street light or an oncoming vehicle is reflected on a wet road surface such as a puddle in the road
- The field of view in front is obstructed by sun glare
- The windshield glass is fogged up.
- Adverse road conditions cause excessive vehicle vibrations while driving
- When the pedestrian suddenly appears in front of the vehicle
- When there is any other electromagnetic interference
- When a construction area, rail or other metal object is near the pedestrian.

⚠ WARNING

- **Do not use Forward Collision - Avoidance Assist system when towing a vehicle. Application of FCA system while towing may adversely affect the safety of your vehicle or the towing vehicle.**
- **Use extreme caution when the vehicle in front of you has cargo that extends rearward from the cab, or when the vehicle in front of you has higher ground clearance.**
- **FCA system is designed to detect and monitor the vehicle ahead in the roadway through radar signals and camera recognition. It is not designed to detect bicycles, motorcycles, or smaller**

(Continued)

(Continued)

wheeled objects such as luggage bags, shopping carts, or strollers.

- **Never try to test the operation of FCA system. Doing so may cause severe injury or death.**
- **When front bumper or windshield glass is replaced or repaired, have the vehicle inspected by an authorized Kia dealer.**

✻ NOTICE

In some instances, FCA system may be cancelled when subjected to electromagnetic interference.

LANE KEEPING ASSIST (LKA)

OQL058203L

OQL048057L

Lane Keeping Assist system is designed to detect the lane markers on the road with a front view camera at the front windshield, and assists the driver's steering to help keep the vehicle in the lanes.

When the system detects the vehicle straying from its lane, it alerts the driver with a visual and audible warning, while applying a slight counter-steering torque, trying to prevent the vehicle from moving out of its lane.

⚠ WARNING

Lane Keeping Assist System is a supplemental system and is not a substitute for safe driving practices. It is the responsibility of the driver to always pay attention and drive safely.

⚠ WARNING

- **Driver is responsible for being aware of surroundings and steering the vehicle for safe driving practices.**
- **Do not turn the steering wheel suddenly when the steering wheel is being assisted by the system.**

✻ NOTICE

- **The operation of the LKA can be canceled or not work properly according to road condition and surroundings. Always be cautious when driving.**
- **Do not disassemble the front view camera temporarily for tinting windows or attaching any types of coatings and accessories.**
  Do not disassemble the camera. take your vehicle to an authorized Kia dealer and have the system checked to need a calibration.
- **When you replace the windshield glass, front view camera or parts of the steering, take your vehicle to an authorized Kia dealer and have the system checked to need a calibration.**

(Continued)

(Continued)

- **The system is designed to detect lane markers using a front view camera. If the lane markers are hard to detect, then the system may be limited. Always be cautious when using the system.**
- **When the lane markers are hard to detect, please refer to "Driver's Attention".**
- **Do not remove or damage the related parts of LKA.**
- **Do not place objects on the dashboard that reflects light such as mirrors, white paper, etc. it may cause malfunction of This may prevent the LKA system from functioning properly.**
- **You may not hear warning sound of LKA if the audio volume is high.**

(Continued)

(Continued)

- **If you drive with your hands off the steering wheel, the LKA will stop controlling the steering wheel after the hands off alarm. If you drive with your hands on the steering wheel again, the control will be activated again.**
- **If the vehicle speed is high, steering torque for assistance will not be enough to keep your vehicle within the lane. If so, the vehicle may move out of its lane. Obey speed limit when using LKA.**
- **If you attach objects to the steering wheel, the system may not assist steering.**
- **If you attach objects to the steering wheel, hands off alarm may not work properly.**

LKA operation

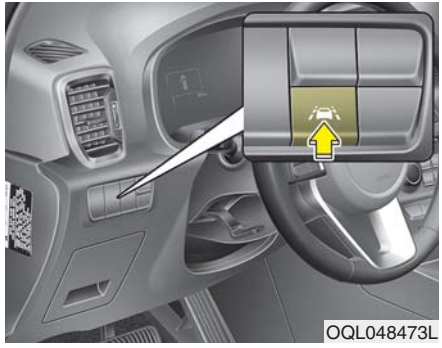

To activate/deactivate the LKA:

With the ignition switch in the ON position, press the LKA button located on the instrument panel on the lower left hand side of the driver.

The indicator in the cluster display will initially illuminate white.

If the indicated (white) was activated in the previous ignition cycle, the system will remain activated.

If you press the LKA button again, the indicator on the cluster display will go off.

The color of indicator will change depend on the condition of LKA.

- White : Sensor does not detect the lane marker or vehicle speed is less than 60 km/h (37 mph).
- Green : Sensor detects the lane marker and system is able to control the steering.

LKA activation

- To see the LKA screen on the LCD display in the cluster, Tab to the ASSIST mode ( ).
- For further details, refer to [menu settings] in chapter 4.
- After LKA is activated, if a lane maker is detected, vehicle speed is over 64 km/h (40 mph) and all the activation conditions are satisfied, a green indicator will illuminate and the system will provide steering inputs.

⚠ WARNING

The Lane Keeping Assist system is a system to help prevent the driver from leaving the lane. However, the driver should not solely rely on the system but always check the road conditions when driving.

■ Lane marker undetected

■ Lane marker detected

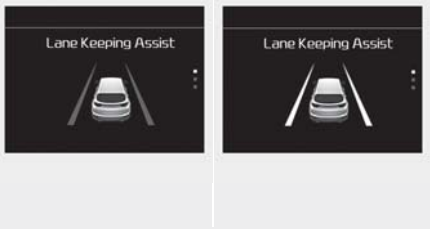

OQL058242L/OQL058243L

If the speed of the vehicle is over 60 km/h (37 mph) and the system detects the lane markers, the color changes from gray to white

When the conditions below are met, LKA will be enable to assist steering.

- Vehicle speed is above 64 km/h (40 mph).
- Lane marker (one or both side) is detected by LKA.

If LKA can assist steering, a green steering wheel indicator will illuminate.

Warning

■ Left marker lane

■ Right marker lane

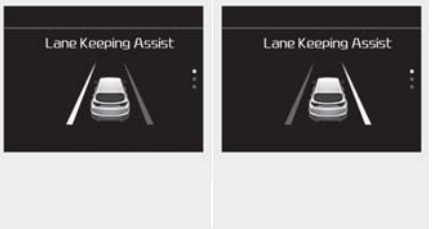

OQL058244L/OQL058245L

If the vehicle leaves a lane, the lane marker you cross will blink on the LCD display.

If the vehicle moves out its lane because steering torque for assistance is not enough, the line indicator will blink.

- If all the conditions to activate LKA are not satisfied, the system will convert to the Lane Departure Warning (LDW) system and warn the driver only when the driver crosses the lane markers. In this scenario, the LDW system does not provide any steering inputs into the vehicle for you. Accordingly, you must take the necessary steps to maintain control of the vehicle and keep it within the lanes.

OJF058416L

If the driver takes hands off the steering wheel for several seconds while the LKA is activated, the system will warn the driver.

⚠ WARNING

- **Always have your hands on the steering wheel while driving.**
- **If you hold the steering wheel with a light grip, the system may generate a hands off warning.**

OJF058417L

If the driver still does not have their hands on the steering wheel after several seconds, the system will not control the steering wheel and warn the driver only when the driver crosses the lane markers.

However, if the driver has their hands on the steering wheel again, the system will start providing steering inputs.

⚠ WARNING

- **It is the responsibility of the driver to safely steer the vehicle and to maintain it in its lane.**
- **Even though the steering is assisted by the system, the driver may control the steering wheel.**
- **Turn off LKA system and drive without using the system in the following situations:**
  - **In bad weather**
  - **In bad road conditions**
  - **When the steering wheel needs to be controlled by the driver frequently.**
- **The steering wheel may feel heavier when the steering wheel is assisted by the system than when it is not.**

LKA malfunction

OQL058246L

- If there is a problem with the system a message will appear. If the problem continues the LKA fail indicator will illuminate.

LKA fail indicator

The LKA fail indicator (yellow) will illuminate with an audible warning if the LKA is not working properly. In this case, have the system checked by an authorized Kia dealer.

When there is a problem with the system do one of the following:

- Turn the system on after turning the engine off and on again.
- Check if the ignition switch is in the ON position.
- Check if the system is affected by the weather. (ex: fog, heavy rain, etc.)
- Check if there is foreign matter covering the camera lens

If the problem is not solved, take your vehicle to an authorized Kia dealer and have the system checked.

LKA system Function Change

The driver can change LKA to Lane Departure Warning System (LDW system) or change the LKA system mode between Standard LKA and Active LKA from the User Settings Mode on the LCD display.

The driver can choose them by placing the ignition switch to the ON position and by selecting ‘User Settings’, ‘Driver Assistance’, and ‘Lane Keeping Assist’.

The system is automatically set to Standard LKA.

Lane Departure

LDW alerts the driver with a visual and acoustic warning when the system detects the vehicle leaving the lane. In this mode, the system will not provide steering inputs. When the vehicle’s front wheel contacts the inside edge of lane line, LKA issues the lane departure warning.

Standard LKA

The Standard LKA mode guides the driver to keep the vehicle within the lanes. It provides steering inputs when the vehicle is about to deviate from the lanes.

Active LKA

The active LKA mode provides more frequent steering inputs in comparison with the Standard LKA mode.

The system will be cancelled when:

- You change lanes with the turn signal.
  - Using the turn signal to change lanes.
  - If you change lanes without the turn signal on, the steering wheel might be controlled.
- LKA can transit to steering assist mode when the car is near to middle of the lane after system on or the lane was changed. LKA cannot assist steering if the vehicle follows a lane marker too closely.
- The control of ESC (Electronic Stability Control) or VSM (Vehicle Stability Management) is activated.
- The steering will not be assisted when you drive fast on a sharp curve.
- The steering will not be assisted when vehicle speed is below 64 km/h (40 mph) and over 177 km/h (110 mph). Always obey all traffic laws and drive safely.
- The steering will not be assisted when you change lanes quickly.
- The steering will not be assisted when you brake suddenly.
- The steering will not be assisted when the lane is very wide or narrow.
- The steering will not be assisted when only one side lane marker is detected.
- There are more than two lane markers such as a construction area.
- Radius of a curve is too small.
- When you turn steering wheel suddenly, the LKA will be disabled temporarily.
- Driving on a steep slope or hill.

DRIVER'S ATTENTION

The driver must be cautious in the following situations because the system may be limited when recognition of the lane marker is poor or limited :

▶ When lane and road condition is poor

- **It is difficult to distinguish the lane marker from road when the lane marker is covered with dust or sand.**
- **It is difficult to distinguish the color of the lane marker from road.**
- **There is something that resembles a lane marker.**
- **The lane marker is indistinct or damaged.**
- **The number of lanes increases/decreases or the lane lines are crossing (Driving through a toll plaza/toll gate, merged/divided lane).**
- **There are more than two lane markers.**
- **The lane marker is very thick or thin.**

(Continued)

(Continued)
- The lane marker is not visible due to snow, rain, stain, a puddle or other factors.
- A shadow is on the lane marker because of a median strip, guardrail, noise barriers or other objects.
- When the lane markers are complicated or a structure substitutes for the lines such as a construction area.
- There are crosswalk signs or other symbols on the road.
- The lane suddenly disappears such as at the intersection.
- The lane marker in a tunnel is covered with dirt or oil and etc.
- The lane is very wide or narrow.

▶ When external conditions intervene
- The brightness outside changes suddenly when entering/exiting a tunnel or passing under a bridge.
- The headlamps are not on at night or in a tunnel, or light level is low.
- There is a boundary structure in the roadway.

(Continued)

(Continued)
- The light of reflects from the water on the road.
- When light shines brightly from behind the vehicle.
- The distance from the vehicle ahead is very short or the vehicle ahead covers up the lane marker.
- You drive on a steep grade or a sharp curve.
- The vehicle vibrates heavily.
- The temperature near inside mirror is very high due to direct sun light and etc.

▶ When front visibility is poor
- The lens or windshield is covered by foreign materials.
- The sensor cannot detect the lane because of fog, heavy rain or snow.
- The windshield is fogged by humid air in the vehicle.
- Putting something on the crash pad and etc.

⚠ WARNING

The Lane Keeping Assist system is a system to help prevent the driver from leaving the lane. However, the driver should not solely rely on the system but always take the necessary actions for safe driving practices.

BLIND-SPOT COLLISION WARNING (BCW) (IF EQUIPPED)

System description

BCW system uses radar sensors in the rear bumper to monitor and warn the driver of an approaching vehicle in the driver's blind spot area.

1) Blind-Spot Area

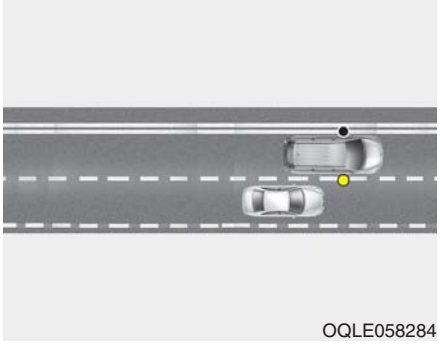

It warns by detecting the vehicles in the blind spots.

The blind spot detection range varies relative to vehicle speed.

Note that if your vehicle is traveling much faster than the vehicles around you, the warning will not occur.

2) Closing at high speed

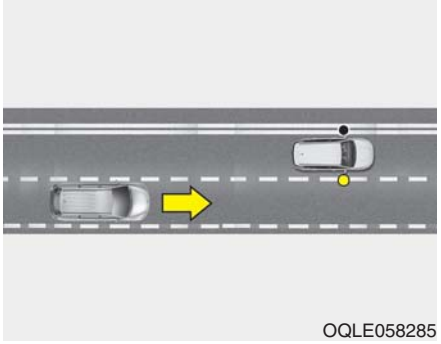

BCW system feature will alert you when a vehicle is approaching in an adjacent lane at a high rate of speed. If the driver activates the turn signal when the system detects an oncoming vehicle, the system sounds an audible alert.

⚠ WARNING

- **BCW system is a supplemental system to assist you. Do not entirely rely on the system.**

  Always pay attention, while driving, for your safety.
- **Always be aware of road conditions while driving and be alert for unexpected situations even though BCW system is operating.**
- **BCW system is not a substitute for proper and safe driving. Always drive safely and use caution when changing lanes or backing up the vehicle. BCW may not detect every object alongside the vehicle.**

System setting and activation

System setting

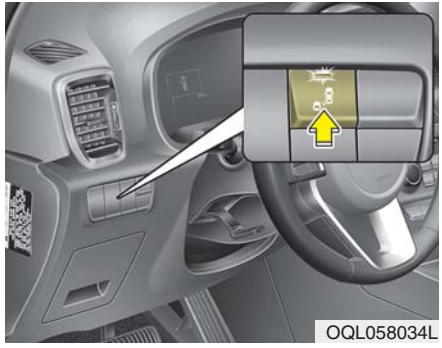

To operate:

Press the BCW switch with the Ignition switch in the ON position. The indicator on the BCW switch will illuminate.

To cancel:

Press the BCW switch again. The indicator on the switch will go off.

When the system is not used, turn the system off by turning off the switch.

✻ NOTICE

- **If the vehicle is turned off then on again, the BCW system returns to the previous state.**
- **When the system is turned on, the warning light will illuminate for 3 seconds on the outside rearview mirror.**

The system will activate when:

1. The BCW system is on.
2. The vehicle speed is above about 30 km/h (20 mph).
3. Other vehicles are detected in blind spot.

Warning indicator and sound

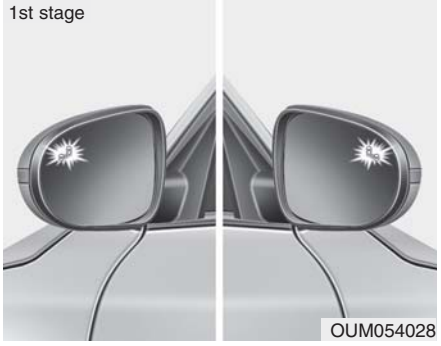

First stage alert

If a vehicle is detected within the boundary of the system, a yellow warning light will illuminate on the outside rearview mirror.

If the detected vehicle is not in detection range, the warning will be turned off according to the driving conditions of the vehicle.

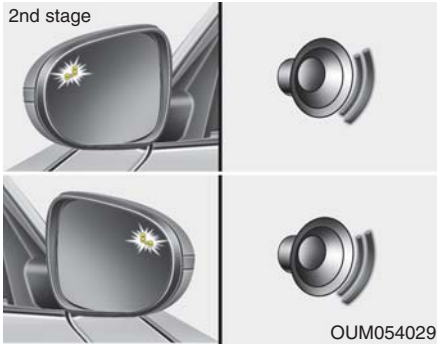

Second stage alert

A warning alarm to alert the driver will activate when:

1. A vehicle has been detected in the blind spot area by the radar system (the warning light will illuminate on the outside rearview mirror (i.e., in the first stage alert) AND
2. The turn signal is on to change a lane (same side as where the vehicle is being detected)

When the second stage alert is activated, the warning light on the outside rearview mirror will also blink.

If you turn off the turn signal switch, the second stage alert (the warning chime and the blinking warning light on the outside rearview mirror) will be deactivated.

If the detected vehicle is not in detection range, the warning will be turned off according to the driving conditions of the vehicle.

⚠ CAUTION

- ***The driver should always use extreme caution while operating the vehicle, whether or not the warning light on the outside rearview mirror illuminates or there is a warning alarm.***
- ***Playing the vehicle audio system at high volume may offset Blind-Spot Collision Warning system warning sounds.***
- ***The warning of the Blind-Spot Collision Warning system may not sound while other system's warning sounds.***

Detecting Sensor

■ Rear corner radars

OQL058209L

The rear corner radars are the sensors inside the rear bumper for detecting the side/rear areas. Always keep the rear bumper clean for proper operation of the system.

✻ NOTICE

- **The system may not work properly when the bumper has been damaged, or if the rear bumper has been replaced or repaired.**
- **The sensing range differs somewhat according to the width of the road. When the road is narrow, the system may detect other vehicles in the next lane.**
- **The system may turn off due to strong electromagnetic waves.**
- **Always keep the sensor or near the sensor clean.**
- **NEVER arbitrarily disassemble the sensor component nor apply any impact on the sensor component.**
- **Be careful not to apply unnecessary force on the radar sensor or sensor cover. If the sensor is forcibly moved out of proper alignment, the system may not operate correctly. In this case, a warning message may not be displayed.**

(Continued)

(Continued)

Have the vehicle inspected by an authorized Kia dealer.

- **Do not apply foreign objects such as a bumper sticker or a bumper guard near the radar sensor or apply paint to the sensor area. Doing so may adversely affect the performance of the sensor.**
- **NEVER install any accessories or stickers on the front windshield, nor tint the front windshield.**
- **Pay extreme caution to keep the camera sensor out of water.**
- **NEVER locate any reflective objects (i.e. white paper, mirror) over the crash pad. Any light reflection may cause a malfunction of the system.**

Warning message

OJF058433L

Blind-Spot Collision Warning system disabled. Radar blocked

- This warning message may appear when :

  - One or both of the sensors on the rear bumper is blocked by dirt or snow or a foreign object.

  - Driving in rural areas where the sensor does not detect another vehicle for an extended period of time.

  - When there is inclement weather such as heavy snow or rain.

If any of these conditions occur, the light on the BCW button and the system will turn off automatically.

Turn off BCW system (if equipped) when a trailer or carrier is installed.

- Press the BCW button (the indicator on the button extinguish) or "User Settings → Driver Assistance → Blind-Spot Safety → Off".
- Deactivate RCCW system by deselecting

  "User Settings → Driver Assistance → Blind-Spot Safety → Rear Cross-Traffic Safety".

  If you use BCW system, remove a trailer or carrier.

When the BCW canceled warning message is displayed in the cluster, check to make sure that the rear bumper is free from any dirt or snow in the areas where the sensor is located. Remove any dirt, snow, or foreign material that could interfere with the radar sensors.

After any dirt or debris is removed, BCW should operate normally after about 10 minutes of driving the vehicle.

If the system still does not operate normally, have your vehicle inspected by an authorized Kia dealer.

Check Blind-Spot Collision Warning system

If there is a problem with BCW system, a warning message will appear and the light on the switch will turn off. The system will turn off automatically. We recommend that you have your vehicle inspected by an authorized Kia dealer.

Limitations of the system

The driver must be cautious in the below situations, because the system may not detect other vehicles or objects in certain circumstances.

- When a trailer or carrier is installed.
- The vehicle drives in inclement weather such as heavy rain or snow.
- The sensor is polluted with rain, snow, mud, etc.
- The rear bumper where the sensor is located is covered with a foreign object such as a bumper sticker, a bumper guard, a bike rack, etc.
- The rear bumper is damaged, or the sensor is out of the original default position.
- The vehicle height gets lower or higher due to heavy loading in a liftgate, abnormal tire pressure, etc.
- When the temperature of the rear bumper is high.
- When the sensors are blocked by other vehicles, walls or parking-lot pillars.

- The vehicle drives on a curved road.
- The vehicle drives through a tollgate.
- The road pavement (or the peripheral ground) abnormally contains metallic components (i.e. possibly due to subway construction).
- There is a fixed object near the vehicle, such as a guardrail.
- While going down or up a steep road where the height of the lane is different.
- Driving on a narrow road where trees or grass or overgrown.
- Driving in rural areas where the sensor does not detect another vehicle or structure for an extended period of time.
- Driving on a wet road.
- Driving on a road where the guardrail or wall is in double structure.
- A big vehicle is near such as a bus or truck.
- When the other vehicle approaches very close.
- When the other vehicle passes at a very fast speed.
- While changing lanes.
- If the vehicle has started at the same time as the vehicle next to you and has accelerated.
- When the vehicle in the next lane moves two lanes away from you OR when the vehicle two lanes away moves to the next lane from you.
- A motorcycle or bicycle is near.
- A flat trailer is near.
- If there are small objects in the detecting area such as a shopping cart or a baby stroller.
- If there is a low height vehicle such as a sports car.
- The brake pedal is depressed.
- ESC (Electronic Stability Control) is activated.
- ESC (Electronic Stability Control) malfunctions.
- The tire pressure is low or a tire is damaged.
- The brake is reworked.
- The vehicle abruptly changes driving direction.
- The vehicle makes sharp lane changes.
- The vehicle sharply stops.
- Temperature is extremely low around the vehicle.
- The vehicle severely vibrates while driving over a bumpy road, uneven/bumpy road, or concrete patch.
- The vehicle drives on a slippery surface due to snow, water puddle, or ice.
- Lane Departure Warning system or Lane Keeping Assist system do not operate normally.

  For more information refer to “Lane Keeping Assist (LKA)” in this chapter.

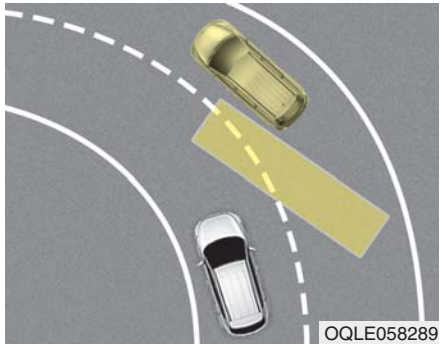

- Driving on a curve

BCW system may not operate properly when driving on a curved road. In certain instances the system may not detect the vehicle in the next lane.

Always pay attention to road and driving conditions, while driving.

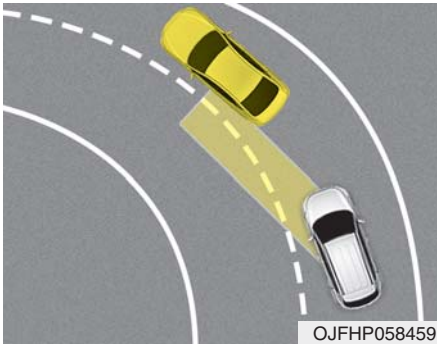

BCW system may not operate properly when driving on a curved road. In certain instances the system may recognize a vehicle in the same lane.

Always pay attention to road and driving conditions, while driving.

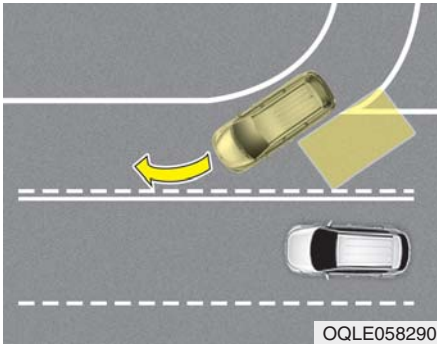

- Driving where the road is merging/dividing

BCW system may not operate properly when driving where the road is merging/dividing. In certain instances the system may not detect the vehicle in the next lane.

Always pay attention to road and driving conditions, while driving.

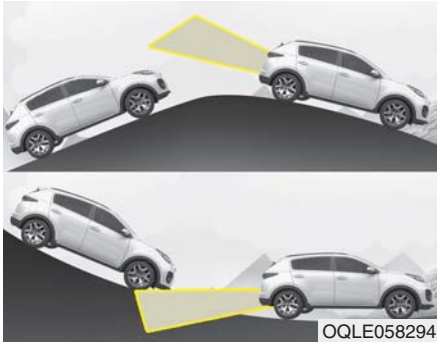
OQLE058294

- Driving on a slope

BCW system may not operate properly when driving on a slope. In certain instances the system may not detect the vehicle in the next lane.

Also, in certain instances the system may wrongly recognize the ground or structures.

Always pay attention to road and driving conditions, while driving.

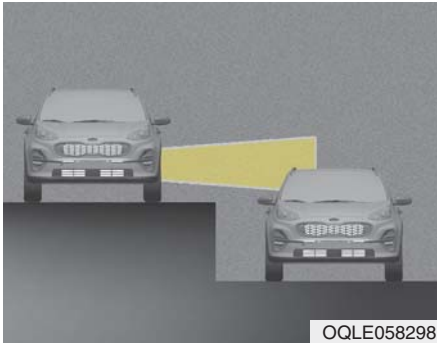
OQLE058298

- Driving where the heights of the lanes are different

BCW system may not operate properly when driving where the heights of the lanes are different.

In certain instances, the system may not detect the vehicle on a road with different lane heights (underpass joining section, grade separated intersections, etc.).

Always pay attention to road and driving conditions, while driving.

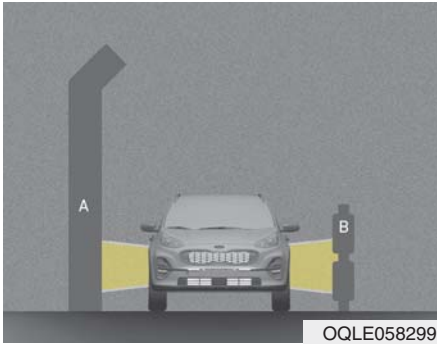

OQLE058299

[A] : noise barrier, [B] : guardrail

- Driving where there is a structure beside the road

BCW system may not operate properly when driving where there is structure beside the road.

In certain instances, the system may wrongly recognize the structures (noise barriers, guardrail, double guardrail, median strip, bollard, street light, road sign, tunnel wall, etc.) beside the road.

Always pay attention to road and driving conditions, while driving.

This device complies with Industry Canada licence-exempt RSS standard(s).

Operation is subject to the following conditions:

(1) This device may not cause interference, and

(2) This device must accept any interference, including interference that may cause undesired operation of the device.

DRIVER ATTENTION WARNING (DAW)

Driver Attention Warning system is designed to warn the driver of potentially hazardous driving situations if it detects inattentive driving practices.

System setting and activation

System setting

- To turn ON the Driver Attention Warning system, turn on the engine, and then select 'User Settings → Driver Assistance → Driver Attention Warning → High sensitivity/Normal sensitivity/Off' on the LCD display.
- The driver can select the Driver Attention Warning system mode.
  - Off : The Driver Attention Warning system is deactivated.
  - Normal sensitivity : The Driver Attention Warning system alerts the driver of his/her or inattentive driving practices.
  - High sensitivity : The Driver Attention Warning system alerts the driver of his/her or inattentive driving practices faster than Normal mode.
- The set-up of the Driver Attention Warning system will be maintained, when the engine is re-started.

Display of the driver's attention level

■ Type A

OJF058423L

■ Type B

OJF058424L

- The driver can monitor their driving conditions on the LCD display.
  - Select 'User Settings Mode' and then 'Driver Assistance' on the LCD display. (For more information, refer to “LCD Display” in chapter 4.)
- The driver's attention level is displayed on the scale of 1 to 5. The lower the number is, the more inattentive the driver is.
- The number decreases when the driver does not take a break for a certain period of time.
- The number increases when the driver attentively drives for a certain period of time.
- When the driver turns on the system while driving, it displays ‘Last Break time’.

Take a break

■ Type A

OJF058425L

■ Type B

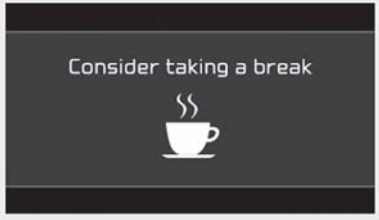

OJF058426L

- The “Consider taking a break” message appears on the LCD display and a warning sounds to suggest that the driver take a break, when the driver's attention level is below 1.
- The Driver Attention Warning system will not suggest a break when the total driving time is shorter than 10 minutes.

⚠ CAUTION

While other warning systems such as the seat belt warning sound are in operation and override the DAW alarming system, DAW sounds may not occur.

Resetting the system

- The last break time is set to 00:00 and the driver's attention level is set to 5 (very attentive) when the driver resets the Driver Attention Warning system.
- The driver attention warning system resets in the following situations.
  - The engine is turned OFF.
  - The driver unfastens the seat belt and then opens the driver's door in stop.
  - The driver takes a break from driving that lasts more than 10 minutes.
- The driver attention warning system operates again, when the driver restarts driving.

System standby

OJF058427L

Driver Attention Warning system enters the ready status and displays the 'Disabled' screen in the following situations.

- The camera sensor is unable to detect the lanes.
- Driving speed remains under 64 km/h (40 mph) or over 177 km/h (110 mph).

System malfunction

OJF058429L

When the "Check Driver Attention Warning (DAW) system" warning message appears, the system is not working properly. In this case, have the vehicle inspected by an authorized Kia dealer.

⚠ WARNING

- **Driver Attention Warning system is not a substitute for safe driving practices. It is the responsibility of the driver to always drive cautiously to prevent unexpected and sudden situations from occurring. Pay attention to the road conditions at all times.**
- **The driver, who feels fatigued, should take a break, even though there is no break suggestion by the Driver Attention Warning system.**

✻ NOTICE

It may suggest a break according to the driver's driving pattern or habits even if the driver doesn't feel fatigued.

✻ NOTICE

Driver Attention Warning system utilizes the camera sensor on the front windshield for its operation. To keep the camera sensor in the best condition, you should observe the followings:

- Do not place any reflective objects (i.e. white paper, mirror) over the dashboard. Any light reflection may prevent the Driver Attention Warning (DAW) system from functioning properly.
- Pay extreme caution to keep the camera sensor dry.
- Do not disassemble the camera assembly, or apply any impact on the camera assembly.
- Playing the vehicle audio system at high volume may prevent the occupants from hearing the Driver Attention Warning system warning sounds.

⚠ CAUTION

The Driver Attention Warning system may not provide alerts in the following situations:

- ***The lane detection performance is limited. (For more information, refer to "Lane Keeping Assist (LKA) system" in this chapter.)***
- ***The vehicle is erratically driven or is abruptly turned for obstacle avoidance (e.g. construction area, other vehicles, fallen objects, bumpy road).***
- ***Forward drivability of the vehicle is severely undermined (possibly due to wide variation in tire pressures, uneven tire wear-out, toe-in/toe-out alignment).***

(Continued)

(Continued)

- *The vehicle drives on a curvy road.*
- *The vehicle drives on a bumpy road.*
- *The vehicle drives through a windy area.*
- *The vehicle is controlled by the following driver assistance systems:*
  - *Lane Keeping Assist system*
  - *Forward collision-avoidance assist system*
  - *Smart Cruise Control system*

✻ NOTICE

Driver Attention Warning system does not detect actual driver fatigue or drowsiness. The system monitors driving and provides a warning if it detects inattentive driving practices.

CRUISE CONTROL (CC)

1. CRUISE indicator(CRUISE)
2. Set speed

Cruise Control system allows you to program the vehicle to maintain a constant speed without depressing the accelerator pedal.

This system is designed to function above approximately 30 km/h (20 mph).

If Cruise Control is left on, (CRUISE indicator light in the instrument cluster illuminated) Cruise Control can be switched on accidentally. Keep Cruise Control system off (CRUISE indicator light OFF) when Cruise Control is not in use, to avoid inadvertently setting a speed.

Use Cruise Control system only when traveling on open highways in good weather.

Do not use Cruise Control when driving in heavy or varying traffic, or on slippery (rainy, icy or snow-covered) or winding roads or over 6% up-hill or down-hill roads.

✻ NOTICE

- **During normal Cruise Control operation, when the SET switch is activated or reactivated after applying the brakes, Cruise Control will energize after approximately 3 seconds. This delay is normal.**
- **To activate Cruise Control, depress the brake pedal at least once after turning the ignition switch to the ON position or starting the engine.**

⚠ WARNING - Misuse of Cruise Control

Do not use Cruise Control if the traffic situation does not allow you to drive safely at a constant speed and with sufficient distance to the vehicle in front.

To set Cruise Control speed:

OQLE058143

1. Press the CRUISE button on the steering wheel to turn the system on. The CRUISE indicator light in the instrument cluster will illuminate.
2. Accelerate to the desired speed, which must be more than 30 km/h (20 mph).

OQL058230L

3. Move the lever down (to SET-), and release it at the desired speed. The SET indicator light in the instrument cluster will illuminate. Release the accelerator at the same time. The desired speed will automatically be maintained.

On a steep grade, the vehicle may slow down or speed up slightly while going uphill or downhill.

To increase Cruise Control set speed:

OQL058231L

Follow either of these procedures:

- Move the lever up (to RES+) and hold it. Your vehicle will accelerate. Release the lever at the speed you want.
- Move the lever up (to RES+) and release it immediately. The cruising speed will increase by 2 km/h (1.0 mph) each time the lever is operated in this manner.

To decrease the cruising speed:

OQL058230L

Follow either of these procedures:

- Move the lever down (to SET-) and hold it. Your vehicle will gradually slow down. Release the lever at the speed you want to maintain.
- Move the lever down (to SET-) and release it immediately. The cruising speed will decrease by 2 km/h (1.0 mph) each time the lever is operated in this manner.

To temporarily accelerate with Cruise Control on:

If you want to speed up temporarily when Cruise Control is on, depress the accelerator pedal. Increased speed will not interfere with Cruise Control operation or change the set speed.

To return to the set speed, take your foot off the accelerator.

To cancel Cruise Control, do one of the following:

OQLE058146

- Depress the brake pedal.
- Shift into N (Neutral) with an Automatic Transmission.
- Press the CANCEL switch.
- Decrease the vehicle speed lower than the memory speed by 20 km/h (12 mph).
- Decrease the vehicle speed to less than approximately 25 km/h (15 mph).

Each of these actions will cancel Cruise Control operation (the SET indicator light in the instrument cluster will go off), but it will not turn the system off. If you wish to resume Cruise Control operation, move the lever up (to RES+). You will return to your previously preset speed.

To resume cruising speed at more than approximately 30 km/h (20 mph):

OQL058231L

If any method other than the CRUISE ON-OFF switch was used to cancel cruising speed and the system is still activated, the most recent set speed will automatically resume when you move the lever up. It will not resume, however, if the vehicle speed has dropped below approximately 30 km/h (20 mph).

✻ NOTICE

Always check the road conditions before you move the lever up (to RES+) to resume the speed.

To turn Cruise Control off, do one of the following:

OQLE058143

- Press the CRUISE button (the CRUISE indicator light in the instrument cluster will go off).
- Turn the ignition off.

Both of these actions will cancel the Cruise Control operation. If you want to resume Cruise Control operation, repeat the steps provided in “To set Cruise Control speed” on the previous page.

SMART CRUISE CONTROL (SCC)

OQL058234L

① Cruise indicator (CRUISE)

② Set speed

③ Vehicle-to-vehicle distance

To see the SCC screen on the LCD display on the cluster, select Assist mode ( ).

For more information, refer to “LCD Display Modes” in chapter 4.

The Smart Cruise Control System allows you to program the vehicle to maintain a constant speed and a predetermined distance to the vehicle ahead without having to depress the accelerator or brake pedal.

⚠ WARNING

For your safety, please read the owner's manual before using Smart Cruise Control.

⚠ WARNING

Smart Cruise Control system is a supplemental system and is not a substitute for safe driving practices. It is the responsibility of the driver to always check the speed and distance to the vehicle ahead.

⚠ WARNING

Take the following precautions :

- **Always set the vehicle speed under the speed limit in your country**
- **If Smart Cruise Control is left on, (cruise indicator in the instrument cluster illuminated) Smart Cruise Control can be activated unintentionally. Keep Smart Cruise Control system off (cruise indicator off) when Smart Cruise Control is not being used.**
- **Use Smart Cruise Control system only when traveling on open highways in good weather.**
- **Do not use Smart Cruise Control when it may not be safe to keep the car at a constant speed. For instance:**

(Continued)

(Continued)

- Highway interchange and tollgate
- Road surrounded by multiple steel constructions (subway construction, steel tunnel, etc)
- Parking lot
- Lanes beside guard rail on a road
- Slippery road with rain, ice, or snow
- Abrupt curved road
- Steep hills
- Windy roads
- Off roads
- Roads under construction
- Rumble strip
- When driving near crash barriers
- When driving on a sharp curve

(Continued)

(Continued)

- When the vehicle sensing ability decreases due to vehicle modification resulting in a level difference between the vehicle's front and rear
- When driving in heavy traffic or when traffic conditions make it difficult to drive at a constant speed
- Limited visibility (rain, snow, smog, etc.)

• Pay particular attention to the driving conditions whenever using Smart Cruise Control system.

• Be careful when driving downhill using the SCC.

• Cruise function should not be used when the vehicle is being towed to prevent any damage.

(Continued)

(Continued)

• Smart Cruise Control sys-tem is not a substitute for safe driving. It is the responsibility of the driver to always check the speed and distance of the vehicle ahead.

• Unexpected situations may lead to possible accidents. Pay attention to road and driving conditions even when Smart Cruise Control system is being operated.

Smart Cruise Control switch

CANCEL : Cancels Cruise Control operation.

CRUISE : Turns Cruise Control system on or off.

RES + : Resumes or increases Cruise Control speed.

SET - : Sets or decreases Cruise Control speed.

: Sets vehicle-to-vehicle distance

Smart Cruise Control speed

To set Smart Cruise Control Speed :

OQLE058143

1. Press the CRUISE button, to turn the system on. The CRUISE indicator in the instrument cluster will illuminate.
2. Accelerate to the desired speed.

   Smart Cruise Control speed can be set as follows:

   - 30 km/h (20 mph) ~ 177 km/h (110 mph) : when there is no vehicle in front
   - 0 km/h (0 mph) ~ 177 km/h (110 mph) : when there is a vehicle in front

OQL058230L

3. Move the lever down (to SET-), and release it at the desired speed. The set speed and vehicle to vehicle distance on the LCD screen will illuminate.
4. Release the accelerator pedal. The desired speed will automatically be maintained.

If there is a vehicle in front of you, the speed may decrease to maintain the distance to the vehicle ahead.

On a steep grade, the vehicle may slow down or speed up slightly while going uphill or downhill.

✻ NOTICE

Vehicle speed may decrease on an upward slope and increase on a ownward slope.
The speed will be set to 30 km/h (20 mph) when there is a vehicle ahead and your vehicle speed is 0 km/h (0 mph) ~ 30 km/h (20 mph).

To increase Cruise Control set speed:

OQL058231L

Follow either of these procedures:

- Move the lever up (to RES+), and hold it. Your vehicle set speed will increase by 10 km/h (5 mph). Release the lever at the speed you want.
- Move the lever up (to RES+), and release it immediately. The cruising speed will increase by 1.0 km/h (1.0 mph) each time you move the lever up (to RES+) in this manner.
- You can set the speed up to 177 km/h (110 mph).

⚠ CAUTION

Check the driving condition before using the toggle switch. Driving speed sharply increases, when you push up and hold the toggle switch.

To decrease Cruise Control set speed:

OQL058230L

Follow either of these procedures:

- Move the lever down (to SET-), and hold it. Your vehicle set speed will decrease by 10 km/h (5 mph). Release the lever at the speed you want.
- Move the lever down (to SET-), and release it immediately. The cruising speed will decrease by 1.0 km/h (1.0 mph) each time you move the lever down (to SET-) in this manner.
- You can set the speed down to 30 km/h (20 mph).

To temporarily accelerate with Cruise Control on:

If you want to speed up temporarily when Cruise Control is on, depress the accelerator pedal. Increased speed will not interfere with Cruise Control operation or change the set speed.

To return to the set speed, take your foot off the accelerator.

If you move the lever down (to SET-) at increased speed, the cruising speed will be set again.

✻ NOTICE

Be careful when accelerating temporarily, because the speed is not controlled automatically at this time even if there is a vehicle in front of you.

Smart Cruise Control will be temporarily canceled when:

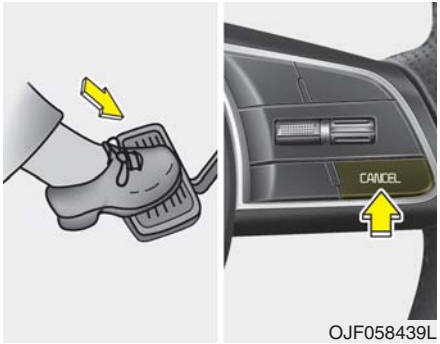

OJF058439L

Cancelled manually

- Depressing the brake pedal.
- Pressing the button located on the steering wheel.
- Depress the brake pedal and press the button at the same time when the vehicle is at a standstill.

Smart Cruise Control turns off temporarily when the Set Speed and Vehicle-to-Vehicle Distance indicator on the LCD display turns off. The CRUISE indicator is illuminated continuously.

Cancelled automatically

- The driver's door is opened.
- The shift lever is shifted to N (Neutral), R (Reverse) or P (Paking).
- The EPB (Electronic Parking Brake) is applied.
- The vehicle speed is over 190 km/h (120 mph).
- The ESC, ABS or TCS is operating.
- The ESC is turned off.
- The sensor or the cover is dirty or covered with foreign matter.
- The vehicle is stopped for a certain period of time.
- The driver starts driving by pushing the toggle switch up (RES+)/down (SET-) or depressing the accelerator pedal, after stopping the vehicle with a vehicle stopped far away in front.
- The accelerator pedal is continuously depressed for long time.
- When engine is stopped by ISG (Idle Stop and Go) mode.
- The engine speed is in dangerous range.
- When the braking control is operated for Forward Collision-Avoidance Assist(FCA).
- The driver starts driving by pushing the toggle switch up (RES+)/down (SET-) or depressing the accelerator pedal, after the vehicle is stopped by Smart Cruise Control system with no other vehicle ahead.
- The vehicle stops and goes repeatedly for a long period of time.
- The engine performance is abnormal.

Each of these actions will cancel Smart Cruise Control operation. (the set speed and vehicle to vehicle distance on the LCD display will go off.) If Smart Cruise Control is cancelled automatically, Smart Cruise Control will not resume even though the RES+ or SET-lever is moved.

✻ NOTICE

If Smart Cruise Control is cancelled, take your vehicle to an authorized Kia dealer and have the system checked.

Smart Cruise Control cancelled

OJF058397L

If the system is automatically cancelled, the warning chime will sound and a message will appear for a few seconds.

You must adjust the vehicle speed by depressing the accelerator or brake pedal according to the road and driving conditions ahead.

Always check the road conditions. Do not rely on the warning chime.

To resume Cruise Control set speed:

OQL058231L

Reset

If any method other than the “RES+” or “SET-“ lever was used to cancel cruising speed and the system is still activated, the cruising speed will automatically resume when you push the lever up (RES+) or down (SET-).

If you push the lever up (RES+), the speed will resume to the recently set speed. However, if vehicle speed drops below 30 km/h (20 mph), it will resume when there is a vehicle in front of your vehicle.

✻ NOTICE

Always check the road conditions when you push the lever up (RES +) to resume speed.

To turn Cruise Control off:

OQLE058143

When Smart Cruise Control is not needed, press the [CRUISE] switch and deactivate the system.

Vehicle to vehicle distance setting

To set vehicle to vehicle distance:

OQL058233L

When Smart Cruise Control is ON, you can set and maintain the distance to the vehicle ahead without pressing the accelerator or brake pedal.

Each time the button is pressed, the vehicle to vehicle distance changes as follows:

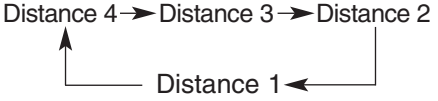

For example, if you drive at 90 km/h (56 mph), the distance maintain as follows;

Distance 4 - approximately 52.5 m (172 ft)

Distance 3 - approximately 40 m (131 ft)

Distance 2 - approximately 32.5 m (107 ft)

Distance 1 - approximately 25 m (82 ft)

✻ NOTICE

The distance is set to the last set distance when the system is used for the first time after starting the engine.

When the lane ahead is clear :

OQLE058283

The vehicle speed will maintain the set speed.

⚠ WARNING
- Following Distance

- **To avoid collisions, always be aware of the selected speed and vehicle to vehicle distance settings when activating your Smart Cruise Control system.**
- **Always maintain sufficient braking distance and decelerate your vehicle by applying the brakes if necessary.**

When there is a vehicle ahead of you in your lane :

OQLE058235

OQLE058236

OQLE058237

OQLE058238

- The vehicle will maintain the set speed, when the lane ahead is clear.
- The vehicle will slow down or speed up to maintain the selected distance, when there is a vehicle ahead of you in the lane. (A vehicle will appear in front of your vehicle in the LCD display only when there is an actual vehicle in front of you)
- If the vehicle ahead speeds up, your vehicle will travel at a steady cruising speed after accelerating to the selected speed.

OQL058200L

⚠ WARNING

When using Smart Cruise Control system:

- **The warning message appears and warning chime sounds, if the vehicle is unable to maintain the selected distance from the vehicle ahead.**

(Continued)

(Continued)

- **If the warning message appears and warning chime sounds, depress the brake pedal to actively adjust the vehicle speed, and the distance to the vehicle ahead.**
- **Even if the warning message does not appear and warning chime is does not sound, always pay attention to the driving conditions to prevent dangerous situations from occurring.**
- **Playing the vehicle audio system at high volume may cause the vehicle occupants not to hear the system warning sounds.**

⚠ CAUTION

OJF058401L

If the vehicle ahead (vehicle speed: less than 30 km/h (20 mph) moves to the next lane, the warning chime will sound and a message will appear. Adjust your vehicle speed for vehicles or objects that can suddenly appear in front of you by depressing the brake pedal according to the road condition ahead and driving condition.

In traffic situation

OJF058402L

Use switch or pedal to accelerate

- In traffic, your vehicle will stop if the vehicle ahead of you stops. Also, if the vehicle ahead of you starts moving, your vehicle will start as well. However, if the vehicle stops you must depress the accelerator pedal or push up the toggle switch (RES+) to start driving.
- If you push Smart Cruise Control toggle switch (RES+ or SET-) while Auto Hold and Smart Cruise Control is operating, the Auto Hold will be released regardless of accelerator pedal operation and the vehicle will start to move. The AUTO HOLD indicator changes from green to white. (if equipped with EPB (Electronic Parking Brake))

Sensor to detect distance to the vehicle ahead

OQL058202L

The sensor detects the distance to the vehicle ahead.

If the sensor is covered with dirt or other foreign matter, the vehicle to vehicle distance control may not operate correctly.

Always keep the area in front of the sensor clean.

Warning message

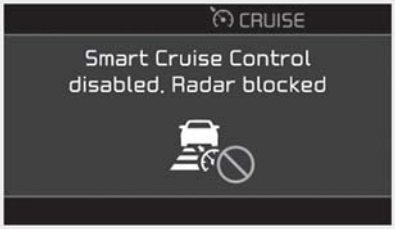

OJF058404L

Smart Cruise Control disabled. Radar blocked

When the sensor lens cover is covered with dirt, snow, or debris, Smart Cruise Control system operation may stop temporarily.

If this occurs, a warning message will appear on the LCD display.

Remove any dirt, snow, or debris and clean the radar sensor lens cover before operating Smart Cruise Control system.

Smart Cruise Control system may not properly activate if the radar is totally contaminated, or if any substance is not detected after turning ON the engine (e.g. in an open terrain).

⚠ CAUTION

- ***Do not apply license plate frame or foreign objects such as a bumper sticker or a bumper guard near the radar sensor. Doing so may adversely affect the sensing performance of the radar.***
- ***Always keep the sensor and bumper clean.***
- ***Use only a soft cloth to wash the vehicle. Do not spray pressurized water directly on the sensor or sensor cover.***

(Continued)

(Continued)

- ***Be careful not to apply unnecessary force on the radar sensor or sensor cover. If the sensor is forcibly moved out of proper alignment, Smart Cruise Control system may not operate correctly. In this case, a warning message may not be displayed.***

  Have the vehicle inspected by an authorized Kia dealer.
- ***Use only a genuine Kia sensor cover for your vehicle. Do not paint anything on the sensor cover.***
- ***If the front bumper becomes damaged in the area around the radar sensor, Smart Cruise Control system may not operate properly.***

OJF058405L

SCC (smart cruise control) malfunction message

The message will appear when the vehicle to vehicle distance control system is not functioning normally.

In this case, take your vehicle to an authorized Kia dealer and have the system checked.

✻ NOTICE

For the SCC operation is temporarily stopped if the radar is blocked, but you wish to use Cruise Control mode (speed control function), you must convert to Cruise Control mode (refer to "To convert to Cruise Control mode" in following page.

To adjust the sensitivity of Smart Cruise Control

The sensitivity of vehicle speed when following the front vehicle to maintain the set distance can be adjusted. Go to User Settings (Driver Assistance) and select (SCC Reaction). You may select one of the three stages you prefer.

- Slow:

  Vehicle speed to the vehicle ahead to maintain the set distance is slower than normal speed.
- Normal:

  Vehicle speed to the vehicle ahead to maintain the set distance is normal
- Fast:

  Vehicle speed to the vehicle ahead to maintain the set distance is faster than normal speed.

✻ NOTICE

The last selected mode remains in the system.

To convert to Cruise Control mode:

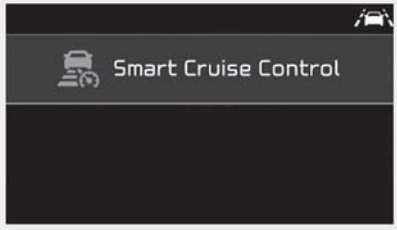

OJF058400L

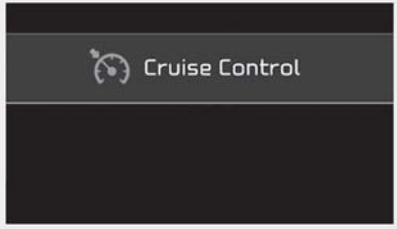

OJF058399L

The driver may choose to only use Cruise Control mode (speed control function) by doing as follows:

1. Turn Smart Cruise Control system on (the cruise indicator light will be on but the system will not be activated).
2. Push the distance to distance switch for more than 2 seconds.
3. Choose between "Smart Cruise Control" and "Cruise Control".

When the system is canceled using the CRUISE button or the CRUISE button is used after the engine is turned on, the Smart Cruise Control mode will turn on.

⚠ WARNING

When using Cruise Control mode, you must manually assess the distance to other vehicles as the system will not automatically brake to slow down for other vehicles.

Limitations of the system

Smart Cruise Control system may have limits to its ability to detect distance to the vehicle ahead due to road and traffic conditions.

On curves

OYG056042

- Smart Cruise Control system may not immediately detect a moving vehicle in your lane, and then your vehicle could accelerate to the set speed. Also, the vehicle speed will rapidly decrease when the vehicle ahead is recognized suddenly.
- Select the appropriate set speed on curves and adjust your vehicle speed by depressing the accelerator or brake pedal according to the road and driving conditions ahead.

OYG056043

- Your vehicle speed can be reduced due to a vehicle in the adjacent lane. Adjust your speed by depressing the brake pedal or applying the accelerator pedal according to road and driving conditions ahead. Check to be sure that the road conditions permit safe operation of Smart Cruise Control.

On inclines

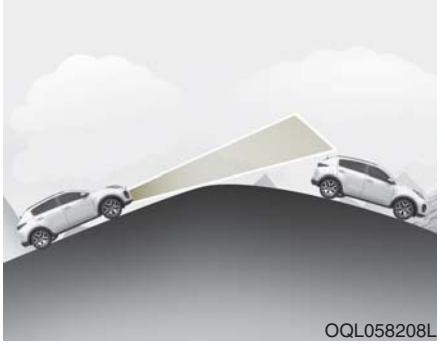
OQL058208L

- During uphill or downhill driving, Smart Cruise Control system may not immediately detect a moving vehicle in your lane, and may cause your vehicle to accelerate to the set speed. Also, the vehicle speed will rapidly down when the vehicle ahead is recognized suddenly.
- Select the appropriate set speed on inclines and adjust your vehicle speed by depressing the accelerator or brake pedal according to the road condition ahead and driving condition.

Lane changing

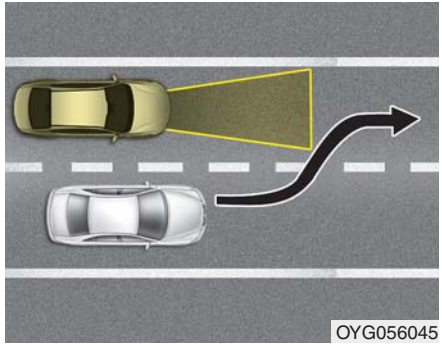
OYG056045

- A vehicle which moves into your lane from an adjacent lane cannot be recognized by the sensor until it is in the sensor's detection range.
- The sensor may not detect immediately when a vehicle cuts in suddenly. Always pay attention to the traffic, road and driving conditions.
- If a vehicle which moves into your lane is slower than your vehicle, your speed may decrease to maintain the distance to the vehicle ahead.
- If a vehicle which moves into your lane is faster than your vehicle, your vehicle will accelerate to the selected speed.

Vehicle recognition

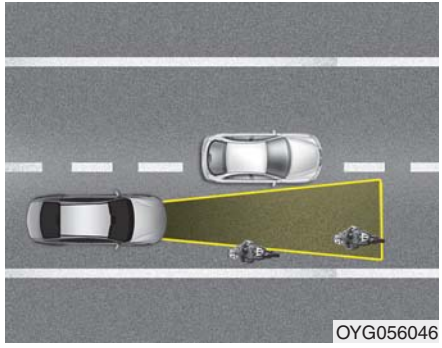
OYG056046

Some vehicles ahead in your lane cannot be recognized by the sensor as follows:

- Narrow vehicles such as motorcycles or bicycles
- Vehicles offset to one side
- Slow-moving vehicles or sudden-decelerating vehicles
- Stopped vehicles
- Vehicles with small rear profiles such as trailers with no loads

A vehicle ahead cannot be recognized correctly by the sensor if any of following occurs:

- When the vehicle is pointing upwards due to overloading in the trunk(tailgate)
- While making turns by steering
- When driving to one side of the lane
- When driving on narrow lanes or on curves

Adjust your vehicle speed by depressing the brake pedal according to the road and driving conditions ahead.

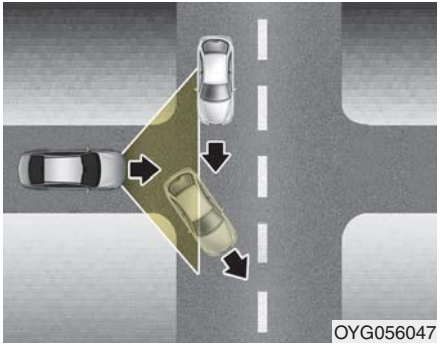

- Your vehicle may accelerate when a vehicle ahead of you disappears.
- When you are warned that the vehicle ahead of you is not detected, drive with caution.

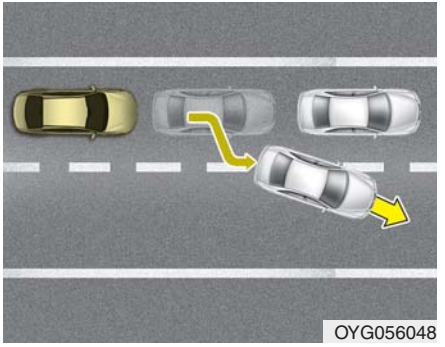

- When vehicles are at a standstill and the vehicle in front of you changes to the next lane, be careful when your vehicle starts to move because it may not immediately recognize the stopped vehicle in front of you.

In this case, you must maintain a safe braking distance, and if necessary, depress the brake pedal to reduce your driving speed in order to maintain a safe distance.

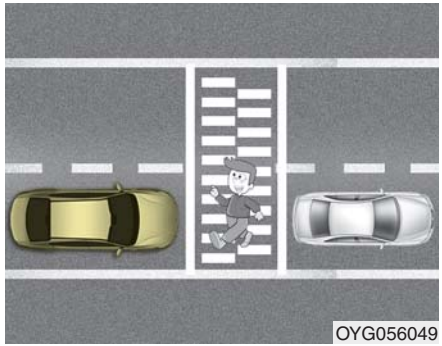

- Always look out for pedestrians when your vehicle is maintaining a distance with the vehicle ahead.

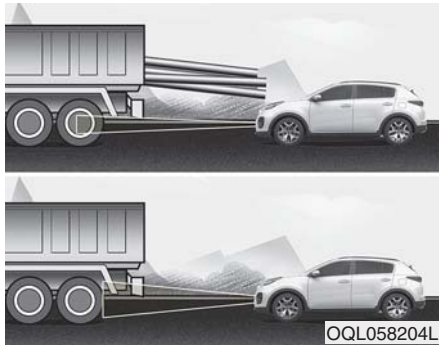

- Always be cautious when approaching vehicles that are taller with higher clearance, or vehicles carrying loads that stick out of the back of the vehicle.

⚠ WARNING

When using Smart Cruise Control take the following precautions:

- **If an emergency stop is necessary, you must apply the brakes. Smart Cruise Control system may not be able to completely stop the vehicle or avoid a collision in every situation.**
- **Keep a safe distance according to road conditions and vehicle speed. If the vehicle to vehicle distance is too close during a high-speed driving, a serious collision may result.**
- **Always maintain sufficient braking distance and decelerate your vehicle by applying the brakes if necessary.**

(Continued)

(Continued)

- Smart Cruise Control system cannot recognize a stopped vehicle, pedestrians or an oncoming vehicle.

  Always look ahead cautiously to prevent unexpected and sudden situations from occurring.
- When other vehicles are changing lanes in front of you frequently, Smart Cruise Control system may not operate appropriately.

  Always drive cautiously to prevent unexpected and sudden situations from occurring.
- Smart Cruise Control system is not a substitute for safe driving practices but a convenience function only. It is the responsibility of the driver to always check to the vehicle ahead.

(Continued)

(Continued)

- Always be aware of the selected speed and distance to the vehicle ahead.
- Smart Cruise Control system may not recognize complex driving situations, always pay attention to driving conditions and control your vehicle speed.
- After an engine start, please stop for several seconds. If system initialization is not completed, the SCC does not normally operate.
- After starting the engine, if objects are not detected or the sensor cover is covered with foreign substances, the SCC system may not work.

✻ NOTICE

Smart Cruise Control system may not operate temporarily due to:

- Electrical interference
- Modified suspension
- Differences in tire abrasion or tire pressure
- Installation of different type of tires

⚠ WARNING

For safe operation, carefully read and follow the instructions in this manual before use.

This device complies with Industry Canada licence-exempt RSS standard(s).

Operation is subject to the following conditions:

(1) This device may not cause interference, and

(2) This device must accept any interference, including interference that may cause undesired operation of the device.

(3) Changes or modifications not expressly approved by the party responsible for compliance could void the user's authority to operate the device.

REAR CROSS-TRAFFIC COLLISION WARNING (RCCW) (IF EQUIPPED)

System description

Rear Cross-Traffic Collision Warning system

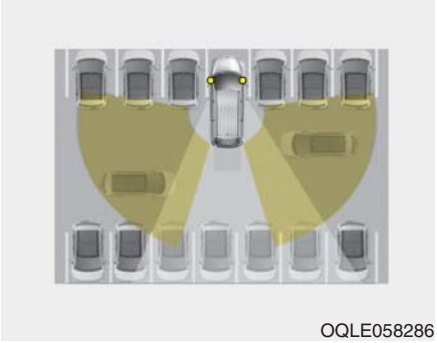

OQLE058286

Rear Cross-Traffic Collision Warning system uses radar sensors to monitor the approaching cross traffic from the left and right side of the vehicle when your vehicle is in reverse.

The blind spot detection range varies relative to the approaching vehicle speed.

⚠ WARNING

- **Always be aware of road conditions while driving and be alert for unexpected situations even though RCCW system is operating.**
- **RCCW system is supplemental systems to assist you. Do not entirely rely on the systems. Always pay attention, while driving, for your safety.**
- **RCCW system is not substitutes for proper and safe driving. Always drive safely and use caution when backing up the vehicle.**

System setting and activation

System setting

To operate:

Go to the 'User Settings → Driver Assistance and select Rear Cross-Traffic Collision Warning ' on the LCD display.

The system will turn on and standby to activate. If you turn deselect the RCCW system, it stops operating (For more information, refer to"LCD Display" in chapter 4.)

To cancel:

Select Driver Assistance in User Settings and select Rear Cross-Traffic Collision Warning ' again, to turn the system off.

✻ NOTICE

- **If the vehicle is turned off then on again, the RCCW system returns to the previous state.**
- **When the system is turned on, the warning light will illuminate for 3 seconds on the outside rearview mirror.**

The system will activate when:

1. The RCCW system is on.
2. The vehicle speed is below 10 km/h (6 mph) with the shift lever in R (Reverse).
3. Other vehicles are detected in Rear Cross-Traffic Collision Warning Range.

Warning indicator and sound

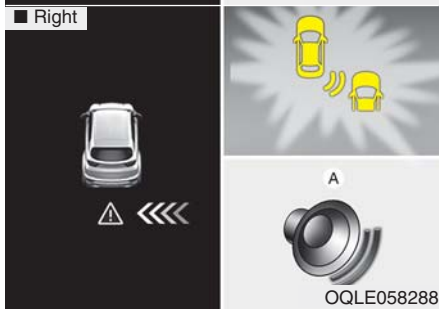

If the vehicle detected by the sensors approaches from the rear left/right side of your vehicle, the warning chime will sound, the warning light on the outside rearview mirror will blink and a message will appear on the LCD display. If the rear view monitor system is in activation, a message will also appear on the 'Infortainment System'.

The warning will stop when:

- The vehicle moving at the rear left/right side of your vehicle is not in the detection range.
- The vehicle is right behind your vehicle.
- The vehicle is not driving towards your vehicle.
- The vehicle's approaching speed is decreased.

✻ NOTICE

- **When the operation condition of RCCW is met, the warning will occur every time a vehicle approaches the side or rear of your stopped (0 km/h (0 mph) vehicle speed) vehicle.**
- **The system's warning or brake may not operate properly if the left or right of your vehicle's rear bumper is blocked by a vehicle or obstacle.**
- **The driver should always use extreme caution while operating the vehicle, whether or not the warning light on the outer side view mirror illuminates or there is a warning alarm.**
- **Playing the vehicle audio system at high volume may prevent occupants from hearing the system's warning sounds.**
- **If any other warning sound such as seat belt warning chime is already generated, the RCCW warning may not sound.**

⚠ WARNING

- **Drive safely even though the vehicle is equipped with Rear Cross-Traffic Collision Warning system. Do not solely rely on the system but check your surrounding when backing the vehicle up.**
- **The driver is responsible for accurate brake control.**
- **Always pay extreme caution while driving. Rear Cross-Traffic Collision Warning system may not operate properly or unnecessarily operate depending on traffic and driving conditions.**

Detecting Sensor

The rear radars are located inside the rear bumper for detecting the side and rear areas.

Always keep the rear bumper clean for proper operation of the system.

✻ NOTICE

- **The system may not work properly when the bumper has been damaged, or if the rear bumper has been replaced or repaired.**
- **The system may turn off due to strong electromagnetic waves.**
- **Always keep the sensors clean.**
- **NEVER arbitrarily disassemble the sensor component nor apply any impact on the sensor component.**
- **Be careful not to apply unnecessary force on the radar sensor or sensor cover. If the sensor is forcibly moved out of proper alignment, the system may not operate correctly. In this case, a warning message may not be displayed.**
  Take your vehicle to an authorized Kia dealer and have the system checked.

(Continued)

(Continued)

- **Do not apply foreign objects such as a bumper sticker or a bumper guard near the radar sensor or apply paint to the sensor area. Doing so may adversely affect the performance of the sensor.**

OJF058433L

Blind-Spot Collision Warning (BCW) system disabled. Radar blocked

- This warning message may appear when:

  - One or both of the sensors on the rear bumper is blocked by dirt or snow or a foreign object.

  - Driving in rural areas where the sensor does not detect another vehicle for an extended period of time.

  - When there is inclement weather such as heavy snow or rain.

  A trailer or carrier is installed. (To use BCW system, remove the trailer or carrier from your vehicle.)

  If any of these conditions occur, the light on BCW button and the system will turn off automatically.

  When BCW canceled warning message is displayed in the cluster, check to make sure that the rear bumper is free from any dirt or snow in the areas where the sensor is located. Remove any dirt, snow, or foreign material that could interfere with the radar sensors.

  After any dirt or debris is removed, BCW system should operate normally after about 10 minutes of driving the vehicle.

  If the system does not work normally even though the foreign substance, trailer or carrier, or other equipment is removed, have the system checked by an authorized Kia dealer.

OJF058435L

If there is a problem with BCW system, a warning message will appear and the light on the switch will turn off. The system will turn off automatically.

In this case, have the system checked by an authorized Kia dealer.

Non-operating condition

Outside rearview mirror may not alert the driver when:

- The outside rearview mirror housing is damaged or covered with debris.
- The window is covered with debris.
- The windows are severely tinted.
- The mirror is covered with dirt, snow, or debris.

Limitations of the system

The driver must be cautious in the below situations, because the system may not detect other vehicles or objects in certain circumstances.

- When a trailer or carrier is installed.
- The vehicle drives in inclement weather such as heavy rain or snow.
- The sensor is polluted with rain, snow, mud, etc.
- The rear bumper where the sensor is located is covered with a foreign object such as a bumper sticker, a bumper guard, a bike rack, etc.
- The rear bumper is damaged, or the sensor is out of the original default position.
- The vehicle height gets lower or higher due to heavy loading in a liftgate, abnormal tire pressure, etc.
- When the temperature of the rear bumper is high.
- When the sensors are blocked by other vehicles, walls or parking-lot pillars.
- The vehicle drives on a curved road.
- The road pavement (or the peripheral ground) abnormally contains metallic components (i.e. possibly due to subway construction).
- There is a fixed object near the vehicle, such as a guardrail.
- While going down or up a steep road where the height of the lane is different.
- Driving on a narrow road where trees or grass or overgrown.
- Driving in rural areas where the sensor does not detect another vehicle for an extended period of time.
- Driving on a wet road.
- Driving on a road where the guardrail or wall is in double structure.
- A big vehicle is near such as a bus or truck.
- When the other vehicle approaches very close.

- When the other vehicle passes at a very fast speed.
- While changing lanes.
- If the vehicle has started at the same time as the vehicle next to you and has accelerated.
- When the vehicle in the next lane moves two lanes away from you OR when the vehicle two lanes away moves to the next lane from you.
- A motorcycle or bicycle is near.
- A flat trailer is near.
- If there are small objects in the detecting area such as a shopping cart or a baby stroller.
- If there is a low height vehicle such as a sports car.
- The brake pedal is depressed.
- ESC (Electronic Stability Control) is activated.
- ESC (Electronic Stability Control) malfunctions.
- The tire pressure is low or a tire is damaged.

.

- The brake is reworked.
- The vehicle sharply stops.
- Temperature is extremely low around the vehicle.
- The vehicle severely vibrates while driving over a bumpy road, uneven/bumpy road, or concrete patch.
- The vehicle drives on a slippery surface due to snow, water puddle, or ice.

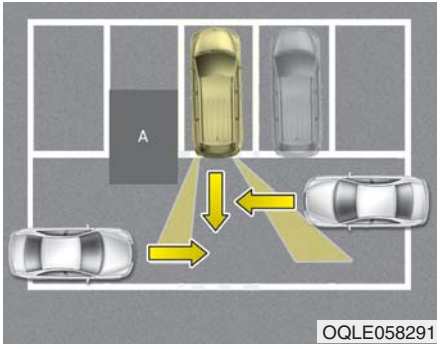

[A] : Structure

- Driving where there is a vehicle or structure near

The system may not operate properly when driving where there is a vehicle or structure near.

In certain instances, the system may not detect the vehicle approaching from behind and the warning or brake may not operate properly.

Always pay attention to your surrounding while driving.

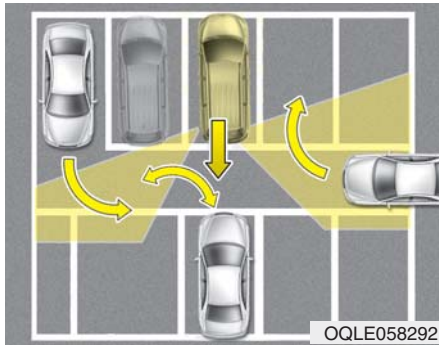
OQLE058292

- When the vehicle is in a complex parking environment

  The system may not operate properly when the vehicle is in a complex parking environment.

  In certain instances, the system may not be able to exactly determine the risk of collision for the vehicles which are parking or pulling out near your vehicle (e.g. a vehicle escaping beside your vehicle, a vehicle parking or pulling out in the rear area, a vehicle approaching your vehicle making a turn, etc.).

  In this case, the warning or brake may not operate properly.

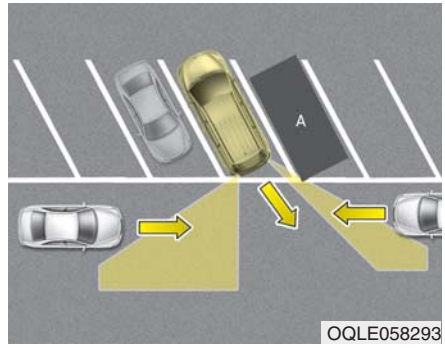

OQLE058293

[A] : Vehicle

- When the vehicle is parked diagonally

The system may not operate properly when the vehicle is parked diagonally.

In certain instances, when the diagonally parked vehicle is pulled out of the parking space, the system may not detect the vehicle approaching from the rear left/right of your vehicle. In this case, the warning or brake may not operate properly.

Always pay attention to your surrounding while driving.

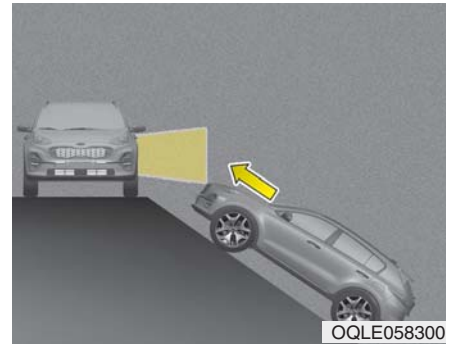
OQLE058300

- When the vehicle is on/near a slope

The system may not operate properly when the vehicle is on/near a slope.

In certain instances, the system may not detect the vehicle approaching from the rear left/right and the warning or brake may not operate properly.

Always pay attention to your surrounding while driving.

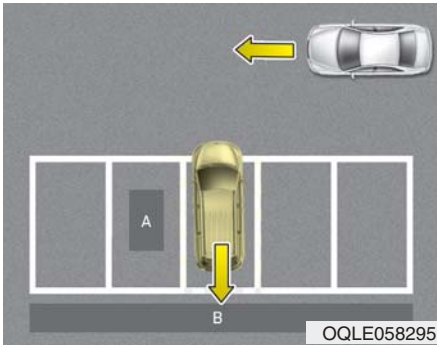

OQLE058295

[A] : Structure, [B] : Wall

- Pulling into the parking space where there is a structure

The system may not operate properly when pulling in the vehicle to the parking space where there is a structure at the back or side of your vehicle.

In certain instances, when backing into the parking space, the system may not detect the vehicle moving in front of your vehicle. In this case, the warning or brake may not operate properly.

Always pay attention to the parking space while driving.

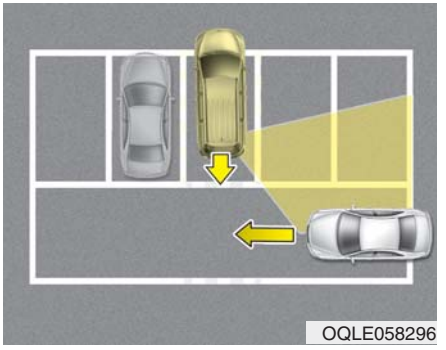
OQLE058296

- When the vehicle is parked rearward

If the vehicle is parked rearward and the sensor detects the another vehicle in the rear area of the parking space, the system can warn or control braking. Always pay attention to the parking space while driving.

This device complies with Industry Canada licence-exempt RSS standard(s).

Operation is subject to the following conditions:

(1) This device may not cause interference, and

(2) This device must accept any interference, including interference that may cause undesired operation of the device.

ECONOMICAL OPERATION

Your vehicle's fuel economy depends mainly on your style of driving, where you drive and when you drive.

Each of these factors affects how many miles (kilometers) you can get from a gallon (liter) of fuel. To operate your vehicle as economically as possible, use the following driving suggestions to help save money in both fuel and repairs:

- Drive smoothly. Accelerate at a moderate rate. Don't make "jack-rabbit" starts or full-throttle shifts and maintain a steady cruising speed. Don't race between stop-lights. Try to adjust your speed to the traffic so you don't have to change speeds unnecessarily. Avoid heavy traffic whenever possible. Always maintain a safe distance from other vehicles so you can avoid unnecessary braking. This also reduces brake wear.
- Drive at a moderate speed. The faster you drive, the more fuel your vehicle uses. Driving at a moderate speed, especially on the highway, is one of the most effective ways to reduce fuel consumption.
- Don't "ride" the brake pedal. This can increase fuel consumption and also increase wear on these components. In addition, driving with your foot resting on the brake pedal may cause the brakes to overheat, which reduces their effectiveness and may lead to more serious consequences.
- Take care of your tires. Keep them inflated to the recommended pressure. Incorrect inflation, either too much or too little, results in unnecessary tire wear. Check the tire pressures at least once a month.
- Be sure that the wheels are aligned correctly. Improper alignment can result from hitting curbs or driving too fast over irregular surfaces. Poor alignment causes faster tire wear and may also result in other problems as well as greater fuel consumption.
- Keep your vehicle in good condition. For better fuel economy and reduced maintenance costs, maintain your vehicle in accordance with the maintenance schedule in chapter 8. If you drive your vehicle in severe conditions, more frequent maintenance is required (see chapter 8 for details).
- Keep your vehicle clean. For maximum service, your vehicle should be kept clean and free of corrosive materials. It is especially important that mud, dirt, ice, etc. not be allowed to accumulate on the underside of the vehicle. This extra weight can result in increased fuel consumption and also contribute to corrosion.
- Travel lightly. Don't carry unnecessary weight in your vehicle. Weight reduces fuel economy.
- Don't let the engine idle longer than necessary. If you are waiting (and not in traffic), turn off your engine and restart only when you're ready to go.

- Remember, your vehicle does not require extended warm-up. After the engine has started, allow the engine to run for 10 to 20 seconds prior to placing the vehicle in gear. In very cold weather, however, give your engine a slightly longer warm-up period.
- Don't "lug" or "over-rev" the engine. Lugging is driving too slowly in a very high gear resulting in engine bucking. If this happens, shift to a lower gear. Over-revving is racing the engine beyond its safe limit. This can be avoided by shifting at the recommended speed.
- Use your air conditioning sparingly. The air conditioning system is operated by engine power so your fuel economy is reduced when you use it.
- Open windows at high speeds can reduce fuel economy.
- Fuel economy is less in crosswinds and headwinds. To help offset some of this loss, slow down when driving in these conditions.

Keeping a vehicle in good operating condition is important both for economy and safety. Therefore, have an authorized Kia dealer perform scheduled inspections and maintenance.

⚠ WARNING - Engine off during motion

Never turn the engine off to coast down hills or anytime the vehicle is in motion. The power steering and power brakes will not function properly without the engine running. In addition, turning off the ignition while driving could engage the steering wheel lock resulting in loss of vehicle steering. Keep the engine on and downshift to an appropriate gear for an engine braking effect.

SPECIAL DRIVING CONDITIONS

Hazardous driving conditions

When hazardous driving conditions are encountered such as water, snow, ice, mud, sand, or similar hazards, follow these suggestions:

- Drive cautiously and allow extra distance for braking.
- Avoid sudden braking or steering.
- When braking with non-ABS brakes pump the brake pedal with a light up-and-down motion until the vehicle is stopped.

Do not pump the brake pedal on a vehicle equipped with ABS.

- If stalled in snow, mud, or sand, use the second gear. Accelerate slowly to avoid spinning the drive wheels.
- Use sand, rock salt, or other non-slip material under the drive wheels to provide traction when stalled in ice, snow, or mud.

⚠ WARNING - Downshifting

Do not downshift with an automatic transmission while driving on slippery surfaces. The sudden change in tire speed could cause the tires to skid and result in an accident.

Reducing the risk of a rollover

This multi-purpose passenger vehicle is defined as a Sports Utility Vehicle (SUV). Utility vehicles have a significantly higher rollover rate than other types of vehicles. SUV's have higher ground clearance and a narrower track to make them capable of performing in a wide variety of off-road applications. Specific design characteristics give them a higher center of gravity than ordinary vehicles. An advantage of the higher ground clearance is a better view of the road, which allows you to anticipate problems. They are not designed for cornering at the same speeds as conventional passenger vehicles, any more than low-slung sports vehicles are designed to perform satisfactorily in off-road conditions. Due to this risk, driver and passengers are strongly recommended to buckle their seat belts. In a rollover crash, an unbelted person is significantly more likely to die than a person wearing a seat belt. There are steps that a driver can make to reduce the risk of a rollover.

If at all possible, avoid sharp turns or abrupt maneuvers, do not load your roof rack with heavy cargo, and never modify your vehicle in any way.

⚠ WARNING - Rollover

As with other Sports Utility Vehicle (SUV), failure to operate this vehicle correctly may result in loss of control, an accident or vehicle rollover.

- **Utility vehicles have a significantly higher rollover rate than other types of vehicles.**
- **Specific design characteristics (higher ground clearance, narrower track, etc.) give this vehicle a higher center of gravity than ordinary vehicles.**
- **A SUV is not designed for cornering at the same speeds as conventional vehicles.**
- **Avoid sharp turns or abrupt maneuvers.**

(Continued)

(Continued)

- **In a rollover crash, an unbelted person is significantly more likely to die than a person wearing a seat belt. Make sure everyone in the vehicle is properly buckled up.**

⚠ WARNING

Your vehicle is equipped with tires designed to provide safe ride and handling capability. Do not use a size and type of tire and wheel that is different from the one that is originally installed on your vehicle. It can affect the safety and performance of your vehicle, which could lead to steering failure or rollover and serious injury.

When replacing the tires, be sure to equip all four tires with the tire and wheel of the same size, type, tread, brand and load-carrying capacity. If you nevertheless decide to equip your vehicle with any tire/wheel combination not recommended by Kia for off road driving, you should not use these tires for highway driving.

Rocking the vehicle

If it is necessary to rock the vehicle to free it from snow, sand, or mud, first turn the steering wheel right and left to clear the area around your front wheels. Then, shift back and forth between R (Reverse) and any forward gear in vehicles equipped with an Automatic Transmission. Do not race the engine, and spin the wheels as little as possible. If you are still stuck after a few tries, have the vehicle pulled out by a tow vehicle to avoid engine overheating and possible damage to the transmission.

⚠ WARNING - Sudden Vehicle Movement

Do not attempt to rock the vehicle if people or objects are nearby. The vehicle may suddenly move forward or backwards as it becomes unstuck.

⚠ CAUTION - Vehicle rocking

Prolonged rocking may cause engine overheating, transmission damage or failure, and tire damage.

⚠ CAUTION - Spinning tires

Do not spin the wheels, especially at speeds more than 35 mph (56 km/h). Spinning the wheels at high speeds when the vehicle is stationary could cause a tire to overheat which could result in tire damage that may injure bystanders.

The ESC system should be turned OFF prior to rocking the vehicle.

Smooth cornering

Avoid braking or gear changing in corners, especially when roads are wet. Ideally, corners should always be taken under gentle acceleration. If you follow these suggestions, tire wear will be held to a minimum.

Driving at night

OQL058039

Because night driving presents more hazards than driving in the daylight, here are some important tips to remember:

- Slow down and keep more distance between you and other vehicles, as it may be more difficult to see at night, especially in areas where there may not be any street lights.
- Adjust your mirrors to reduce the glare from other driver's headlights.
- Keep your headlights clean and properly aimed. (On vehicles not equipped with the automatic headlight aiming feature.) Dirty or improperly aimed headlights will make it much more difficult to see at night.
- Avoid staring directly at the headlights of oncoming vehicles. You could be temporarily blinded, and it will take several seconds for your eyes to readjust to the darkness.

Driving in the rain

OQL058210L

Rain and wet roads can make driving dangerous, especially if you’re not prepared for the slick pavement. Here are a few things to consider when driving in the rain:

- A heavy rainfall will make it harder to see and will increase the distance needed to stop your vehicle, so slow down.
- Keep your windshield wiping equipment in good shape. Replace your windshield wiper blades when they show signs of streaking or missing areas on the windshield.
- If your tires are not in good condition, making a quick stop on wet pavement can cause a skid and possibly lead to an accident. Be sure your tires are in good shape.
- Turn on your headlights to make it easier for others to see you.
- Driving too fast through large puddles can affect your brakes. If you must go through puddles, try to drive through them slowly.
- If you believe you may have gotten your brakes wet, apply them lightly while driving until normal braking operation returns.

Driving in flooded areas

Avoid driving through flooded areas unless you are sure the water is no higher than the bottom of the wheel hub. Drive through any water slowly. Allow adequate stopping distance because brake performance may be affected.

After driving through water, dry the brakes by gently applying them several times while the vehicle is moving slowly.

Driving off-road

Drive carefully off-road because your vehicle may be damaged by rocks or roots of trees. Become familiar with the off-road conditions where you are going to drive before you begin driving.

Highway driving

Tires

Adjust the tire inflation pressures to specification. Low tire inflation pressures will result in overheating and possible failure of the tires.

Avoid using worn or damaged tires which may result in reduced traction or tire failure.

Never exceed the maximum tire inflation pressure shown on the tires.

⚠ WARNING - Under/over inflated tires

Always check the tires for proper inflation before driving. Underinflated or overinflated tires can cause poor handling, loss of vehicle control, and sudden tire failure leading to accidents, injuries, and even death. For proper tire pressures, refer to "Tires and wheels" in chapter 9.

⚠ WARNING - Tire tread

Always check the tire tread before driving your vehicle. Worn-out tires can result in loss of vehicle control. Worn-out tires should be replaced as soon as possible. For further information and tread limits, refer to "Tires and wheels" in chapter 8.

Fuel, engine coolant and engine oil

High speed travel consumes more fuel than urban motoring. Do not forget to check both the engine coolant and engine oil.

Drive belt

A loose or damaged drive belt may result in overheating of the engine.

WINTER DRIVING

Severe weather conditions in the winter result in greater wear and other problems. To minimize the problems of winter driving, you should follow these suggestions:

Snowy or icy conditions

To drive your vehicle in deep snow, it may be necessary to use snow tires on your tires. If snow tires are needed, it is necessary to select tires equivalent in size and type of the original equipment tires. Failure to do so may adversely affect the safety and handling of your vehicle. Furthermore, speeding, rapid acceleration, sudden brake applications, and sharp turns are potentially very hazardous practices.

During deceleration, use engine braking to the fullest extent. Sudden brake applications on snowy or icy roads may cause skids to occur. You need to keep sufficient distance between the vehicle in operation in front of your vehicle. Also, apply the brake gently.

Snow tires

If you mount snow tires on your vehicle, make sure they are radial tires of the same size and load range as the original tires. Mount snow tires on all four wheels to balance your vehicle's handling in all weather conditions. Keep in mind that the traction provided by snow tires on dry roads may not be as high as your vehicle's original equipment tires. You should drive cautiously even when the roads are clear. Check with the tire dealer for maximum speed recommendations.

Do not install studded tires without first checking local, state and municipal regulations for possible restrictions against their use.

Use high quality ethylene glycol coolant

Your vehicle is delivered with high quality ethylene glycol coolant in the cooling system. It is the only type of coolant that should be used because it helps prevent corrosion in the cooling system, lubricates the water pump and prevents freezing. Be sure to replace or replenish your coolant in accordance with the maintenance schedule in chapter 8. Before winter, have your coolant tested to assure that its freezing point is sufficient for the temperatures anticipated during the winter.

Check battery and cables

Winter puts additional burdens on the battery system. Visually inspect the battery and cables as described in chapter 8. The level of charge in your battery can be checked by an authorized Kia dealer or a service station.

Change to "winter weight" oil if necessary

In some climates it is recommended that a lower viscosity "winter weight" oil be used during cold weather. See chapter 9 for recommendations. If you aren't sure what weight oil you should use, consult an authorized Kia dealer.

Check spark plugs and ignition system

Inspect your spark plugs as described in chapter 8 and replace them if necessary. Also check all ignition wiring and components to be sure they are not cracked, worn or damaged in any way.

To keep locks from freezing

To keep the locks from freezing, squirt an approved de-icer fluid or glycerine into the key opening. If a lock is covered with ice, squirt it with an approved de-icing fluid to remove the ice. If the lock is frozen internally, you may be able to thaw it out by using a heated key. Handle the heated key with care to avoid injury.

Use approved window washer anti-freeze in system

To keep the water in the window washer system from freezing, add an approved window washer anti-freeze solution in accordance with instructions on the container. Window washer anti-freeze is available from an authorized Kia dealer and most auto parts outlets. Do not use engine coolant or other types of anti-freeze as these may damage the paint finish.

Don’t let your parking brake freeze

Under some conditions your parking brake can freeze in the engaged position. This is most likely to happen when there is an accumulation of snow or ice around or near the rear brakes or if the brakes are wet. If there is a risk the parking brake may freeze, apply it only temporarily while you put the gear shift lever in P (Park, Automatic Transmission) and block the rear wheels so the vehicle cannot roll. Then release the parking brake.

Don't let ice and snow accumulate underneath

Under some conditions, snow and ice can build up under the fenders and interfere with the steering. When driving in severe winter conditions where this may happen, you should periodically check underneath the vehicle to be sure the movement of the front wheels and the steering components are not obstructed.

Carry emergency equipment

Depending on the severity of the weather, you should carry appropriate emergency equipment. Some of the items you may want to carry include tow straps or chains, flashlight, emergency flares, sand, shovel, jumper cables, window scraper, gloves, ground cloth, coveralls, blanket, etc.

TRAILER TOWING

If you are considering towing with your vehicle, you should first check with your state's Department of Motor Vehicles to determine the legal requirements.

Since laws vary the requirements for towing trailers, cars, or other types of vehicles or apparatus may differ. Ask an authorized Kia dealer for further details before towing.

⚠ WARNING - Towing a trailer

Always check your towing equipment to confirm correct equipment size and installation before use. Using incompatible or incorrectly installed trailer equipment can affect the vehicle operation and endanger you and your passengers.

You may require an additional wiring harness connector to install a trailer hitch. Please contact an authorized Kia dealer for more details.

⚠ WARNING - Weight limits

Before towing, make sure the total trailer weight, GCW (gross combination weight), GVW (gross vehicle weight), GAW (gross axle weight) and trailer tongue load are all within the limits.

⚠ CAUTION - Trailer installation

Follow instructions in this section when pulling a trailer. Pulling a trailer improperly can damage your vehicle and result in costly repairs not covered by your warranty.

Your vehicle can tow a trailer. To identify what the vehicle trailering capacity is for your vehicle, you should read the information in “Weight of the trailer” that appears later in this section.

Remember that trailering is different than just driving your vehicle by itself. Trailering means changes in handling, durability, and fuel economy. Successful, safe trailering requires correct equipment, and it has to be used properly.

This section contains many time-tested, important trailering tips and safety rules. Many of these are important for your safety and that of your passengers. Please read this section carefully before you pull a trailer.

Load-pulling components such as the engine, transmission, wheel assemblies, and tires are forced to work harder against the load of the added weight. The engine is required to operate at relatively higher speeds and under greater loads. This additional burden generates extra heat. The trailer also adds considerably to wind resistance, increasing the pulling requirements.

Hitches

It's important to have the correct hitch equipment. Crosswinds, large trucks going by, and rough roads are a few reasons why you'll need the right hitch. Here are some rules to follow:

- Will you have to make any holes in the body of your vehicle when you install a trailer hitch? If you do, then be sure to seal the holes later when you remove the hitch.

  If you don't seal them, deadly carbon monoxide (CO) from your exhaust can get into your vehicle, as well as dirt and water.
- The bumpers on your vehicle are not intended for hitches. Do not attach rental hitches or other bumper-type hitches to them. Use only a frame-mounted hitch that does not attach to the bumper.
- Kia trailer hitch accessory is available at an authorized Kia dealer.

Safety chains

You should always attach chains between your vehicle and your trailer. Cross the safety chains under the tongue of the trailer so that the tongue will not drop to the road if it becomes separated from the hitch.

Instructions about safety chains may be provided by the hitch manufacturer or by the trailer manufacturer. Follow the manufacturer's recommendation for attaching safety chains. Always leave just enough slack so you can turn with your trailer. And, never allow safety chains to drag on the ground.

Trailer brakes

If your trailer is equipped with a braking system, make sure it conforms to your state's regulations and that it is properly installed and operating correctly.

If your trailer weight exceeds the maximum allowed weight without trailer brakes, then the trailer will also require its own brakes as well. Be sure to read and follow the instructions for the trailer brakes so you'll be able to install, adjust and maintain them properly.

- Don't tap into or modify your vehicle's brake system.

⚠ WARNING - Trailer brakes

Do not use a trailer with its own brakes unless you are absolutely certain that you have properly set up the brake system. This is not a task for amateurs. Use an experienced, competent trailer shop for this work.

Driving with a trailer

Towing a trailer requires a certain amount of experience. Before setting out for the open road, you must get to know your trailer. Acquaint yourself with the feel of handling and braking with the added weight of the trailer. And always keep in mind that the vehicle you are driving is now a good deal longer and not nearly so responsive as your vehicle is by itself.

Before you start, check the trailer hitch and platform, safety chains, electrical connector(s), lights, tires and mirror adjustment. If the trailer has electric brakes, start your vehicle and trailer moving and then apply the trailer brake controller by hand to be sure the brakes are working. This lets you check your electrical connection at the same time.

During your trip, check occasionally to be sure that the load is secure, and that the lights and any trailer brakes are still working.

Following distance

Stay at least twice as far behind the vehicle ahead as you would when driving your vehicle without a trailer. This can help you avoid situations that require heavy braking and sudden turns.

Passing

You'll need more passing distance up ahead when you're towing a trailer. And, because of the increased vehicle length, you'll need to go much farther beyond the passed vehicle before you can return to your lane. Due to the added load to the engine when going uphill the vehicle may also take longer to pass than it would on flat ground.

Backing up

Hold the bottom of the steering wheel with one hand. Then, to move the trailer to the left, just move your hand to the left. To move the trailer to the right, move your hand to the right. Always back up slowly and, if possible, have someone guide you.

Making turns

When you're turning with a trailer, make wider turns than normal. Do this so your trailer won't strike soft shoulders, curbs, road signs, trees, or other objects near the edge of the road. Avoid jerky or sudden maneuvers. Signal well in advance before turning or lane changes.

Turn signals when towing a trailer

When you tow a trailer, your vehicle has to have a different turn signal flasher and extra wiring. The green arrows on your instrument panel will flash whenever you signal a turn or lane change. Properly connected, the trailer lights will also flash to alert other drivers you're about to turn, change lanes, or stop.

When towing a trailer, the green arrows on your instrument panel will flash for turns even if the bulbs on the trailer are burned out. Thus, you may think drivers behind you are seeing your signals when, in fact, they are not. It's important to check occasionally to be sure the trailer bulbs are still working. You must also check the lights every time you disconnect and then reconnect the wires.

Do not connect a trailer lighting system directly to your vehicle's lighting system. Use only an approved trailer wiring harness.

An authorized Kia dealer can assist you in installing the wiring harness.

⚠ CAUTION

Always use an approved trailer wiring harness. Failure to use an approved trailer wiring harness could result in damage to the vehicle electrical system.

Driving on grades

Reduce speed and shift to a lower gear before you start down a long or steep downgrade. If you don't shift down, you might have to use your brakes so much that they would get hot and no longer operate efficiently.

On a long uphill grade, shift down and reduce your speed to around 70 km/h (45 mph) to reduce the possibility of engine and transmission overheating.

If your trailer weighs more than the maximum trailer weight without trailer brakes and you have an automatic transmission, you should drive in D (Drive) when towing a trailer.

Operating your vehicle in D (Drive) when towing a trailer will minimize heat build up and extend the life of your transmission.

Towing up hill

- When towing a trailer on steep grades (in excess of 6%) pay close attention to the engine coolant temperature gauge to ensure the engine does not overheat.

  If the needle of the coolant temperature gauge moves across the dial towards “H” (HOT), pull over and stop as soon as it is safe to do so, and allow the engine to idle until it cools down. You may proceed once the engine has cooled sufficiently.
- You must decide driving speed depending on trailer weight and uphill grade to reduce the possibility of engine and transmission overheating.

Parking on hills

Generally, if you have a trailer attached to your vehicle, you should not park your vehicle on a hill. People can be seriously or fatally injured, and both your vehicle and the trailer can be damaged if they unexpectedly roll downhill.

However, if you ever have to park your trailer on a hill, here's how to do it:

1. Pull the vehicle into the parking space. Turn the steering wheel in the direction of the curb (right if headed downhill, left if headed up hill).
2. If the vehicle has an automatic transmission, place the vehicle in P (Park).
3. Set the parking brake and shut off the engine.
4. Place chocks under the trailer wheels on the down hill side of the wheels.
5. Start the vehicle, hold the brakes, shift to neutral, release the parking brake and slowly release the brakes until the trailer chocks absorb the load.
6. Reapply the brakes, reapply the parking brake and shift the vehicle to P (Park) for automatic transmission.
7. Shut off the vehicle and release the vehicle brakes but leave the parking brake set.

When you are ready to leave after parking on a hill

1. With the automatic transmission in P (Park), apply your brakes and hold the brake pedal down while you:
   - Start your engine;
   - Shift into gear; and
   - Release the parking brake.
2. Slowly remove your foot from the brake pedal.
3. Drive slowly until the trailer is clear of the chocks.
4. Stop and have someone pick up and store the chocks.

Maintenance when trailer towing

Your vehicle will need service more often when you regularly pull a trailer. Important items to pay particular attention to include engine oil, automatic transmission fluid, axle lubricant and cooling system fluid. Brake condition is another important item to frequently check. Each item is covered in this manual, and the Index will help you find them quickly. If you're trailering, it's a good idea to review these sections before you start your trip.

Don't forget to also maintain your trailer and hitch. Follow the maintenance schedule that accompanied your trailer and check it periodically. Preferably, conduct the check at the start of each day's driving. Most importantly, all hitch nuts and bolts should be tight.

⚠ **CAUTION - Air condition**

Do not use the A/C while using your vehicle to tow uphill. Due to higher load during trailer usage, overheating might occur on hot days or during uphill driving.

- When towing check transmission fluid more frequently.

If you do decide to pull a trailer

Here are some important points if you decide to pull a trailer:

- Consider using a sway control. You can ask a hitch dealer about sway control.
- Do not do any towing with your vehicle during its first 2,000 km (1,200 miles) in order to allow the engine to properly break in. Failure to heed this caution may result in serious engine or transmission damage.
- When towing a trailer, be sure to consult an authorized Kia dealer for further information on additional requirements such as a towing kit, etc.
- Always drive your vehicle at a moderate speed (less than 100 km/h (60 mph)).
- On a long uphill grade, do not exceed 70 km/h (45 mph) or the posted towing speed limit, whichever is lower.
- The chart contains important considerations that have to do with weight:

For North America

Item		Theta II 2.0L T-GDI	Theta II 2.4L GDI
Maximum trailer weight	Without brake System	748 kg (1,650 lbs)	748 kg (1,650 lbs)
	With brake System	907 kg (2,000 lbs)	907 kg (2,000 lbs)
Maximum tongue weight		100 kg (220 lbs)	100 kg (220 lbs)

To identify what the vehicle trailering capacity is for your vehicle, you should read the information in “Weight of the Trailer” that appears later in this section.

Weight of the trailer

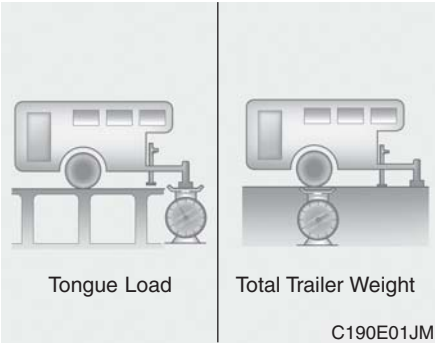

What is the maximum safe weight of a trailer? It should never weigh more than the maximum trailer weight with trailer brakes. But even that can be too heavy.

It depends on how you plan to use your trailer. For example, speed, altitude, road grades, outside temperature and how often your vehicle is used to pull a trailer are all important. The ideal trailer weight can also depend on any special equipment that you have on your vehicle.

Weight of the trailer tongue

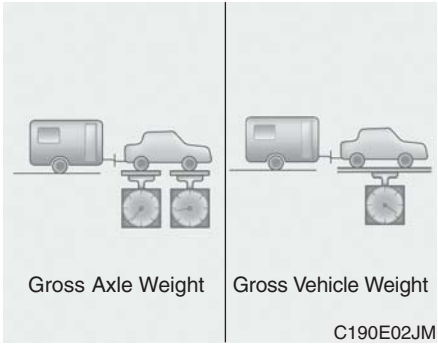

The tongue load of any trailer is an important weight to measure because it affects the total gross vehicle weight (GVW) of your vehicle. This weight includes the curb weight of the vehicle, any cargo you may carry in it, and the people who will be riding in the vehicle. And if you will tow a trailer, you must add the tongue load to the GVW because your vehicle will also be carrying that weight.

After you've loaded your trailer, weigh the trailer and then the tongue, separately, to see if the weights are proper. If they aren't, you may be able to correct them simply by moving some items around in the trailer.

⚠ WARNING - Trailer

Always follow the loading instructions provided with your trailer. Improper loading can affect vehicle operation and result in an accident.

VEHICLE LOAD LIMIT

Tire and loading information label

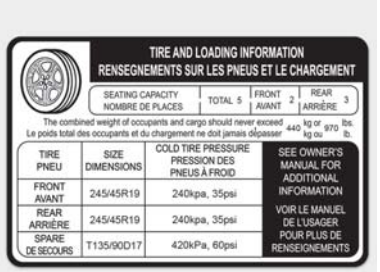

TIRE AND LOADING INFORMATION
RENSEGNEMENTS SUR LES PNEUS ET LE CHARGEMENT

SEATING CAPACITY NOMBRE DE PLACES	TOTAL 5	FRONT AVANT 2	REAR ARRIÈRE 3

The combined weight of occupants and cargo should never exceed 440 kg or kg ou 970 lbs. lb.
Le poids total des occupants et du chargement ne doit jamais dépasser

TIRE PNEU	SIZE DIMENSIONS	COLD TIRE PRESSURE PRESSION DES PNEUS À FROID	SEE OWNER'S MANUAL FOR ADDITIONAL INFORMATION
FRONT AVANT	245/45R19	240kpa, 35psi	VOIR LE MANUEL DE L'USAGER POUR PLUS DE RENSEIGNEMENTS
REAR ARRIÈRE	245/45R19	240kpa, 35psi	
SPARE DE SECOURS	T135/90D17	420kPa, 60psi	

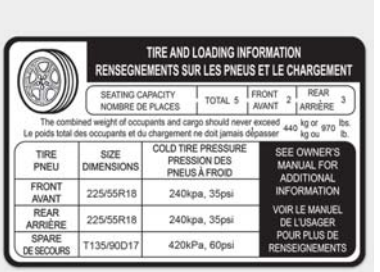

TIRE AND LOADING INFORMATION
RENSEGNEMENTS SUR LES PNEUS ET LE CHARGEMENT

SEATING CAPACITY NOMBRE DE PLACES	TOTAL 5	FRONT AVANT 2	REAR ARRIÈRE 3

The combined weight of occupants and cargo should never exceed 440 kg or kg ou 970 lbs. lb.
Le poids total des occupants et du chargement ne doit jamais dépasser

TIRE PNEU	SIZE DIMENSIONS	COLD TIRE PRESSURE PRESSION DES PNEUS À FROID	SEE OWNER'S MANUAL FOR ADDITIONAL INFORMATION
FRONT AVANT	225/55R18	240kpa, 35psi	VOIR LE MANUEL DE L'USAGER POUR PLUS DE RENSEIGNEMENTS
REAR ARRIÈRE	225/55R18	240kpa, 35psi	
SPARE DE SECOURS	T135/90D17	420kPa, 60psi	

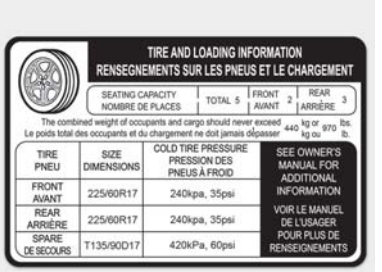

TIRE AND LOADING INFORMATION
RENSEGNEMENTS SUR LES PNEUS ET LE CHARGEMENT

SEATING CAPACITY NOMBRE DE PLACES	TOTAL 5	FRONT AVANT 2	REAR ARRIÈRE 3

The combined weight of occupants and cargo should never exceed 440 kg or kg ou 970 lbs. lb.
Le poids total des occupants et du chargement ne doit jamais dépasser

TIRE PNEU	SIZE DIMENSIONS	COLD TIRE PRESSURE PRESSION DES PNEUS À FROID	SEE OWNER'S MANUAL FOR ADDITIONAL INFORMATION
FRONT AVANT	225/60R17	240kpa, 35psi	VOIR LE MANUEL DE L'USAGER POUR PLUS DE RENSEIGNEMENTS
REAR ARRIÈRE	225/60R17	240kpa, 35psi	
SPARE DE SECOURS	T135/90D17	420kPa, 60psi	

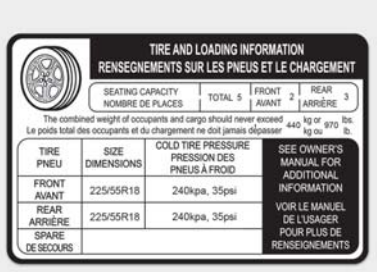

TIRE AND LOADING INFORMATION
RENSEGNEMENTS SUR LES PNEUS ET LE CHARGEMENT

SEATING CAPACITY NOMBRE DE PLACES	TOTAL 5	FRONT AVANT 2	REAR ARRIÈRE 3

The combined weight of occupants and cargo should never exceed 440 kg or kg ou 970 lbs. lb.
Le poids total des occupants et du chargement ne doit jamais dépasser

TIRE PNEU	SIZE DIMENSIONS	COLD TIRE PRESSURE PRESSION DES PNEUS À FROID	SEE OWNER'S MANUAL FOR ADDITIONAL INFORMATION
FRONT AVANT	225/55R18	240kpa, 35psi	VOIR LE MANUEL DE L'USAGER POUR PLUS DE RENSEIGNEMENTS
REAR ARRIÈRE	225/55R18	240kpa, 35psi	
SPARE DE SECOURS			

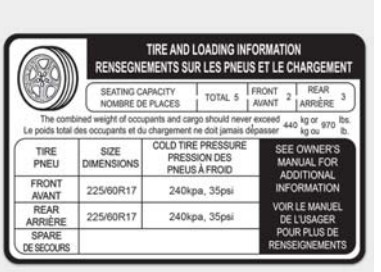

TIRE AND LOADING INFORMATION
RENSEGNEMENTS SUR LES PNEUS ET LE CHARGEMENT

SEATING CAPACITY NOMBRE DE PLACES	TOTAL 5	FRONT AVANT 2	REAR ARRIÈRE 3

The combined weight of occupants and cargo should never exceed 440 kg or kg ou 970 lbs. lb.
Le poids total des occupants et du chargement ne doit jamais dépasser

TIRE PNEU	SIZE DIMENSIONS	COLD TIRE PRESSURE PRESSION DES PNEUS À FROID	SEE OWNER'S MANUAL FOR ADDITIONAL INFORMATION
FRONT AVANT	225/60R17	240kpa, 35psi	VOIR LE MANUEL DE L'USAGER POUR PLUS DE RENSEIGNEMENTS
REAR ARRIÈRE	225/60R17	240kpa, 35psi	
SPARE DE SECOURS			

OQLA055174/OQLA055173/OQLA055172/OQLA055171/OQLA055170

The label located on the driver's door sill gives the original tire size, cold tire pressures recommended for your vehicle, the number of people that can be in your vehicle and vehicle capacity weight.

Vehicle capacity weight:

440 kg (970 lbs)

Vehicle capacity weight is the maximum combined weight of occupants and cargo. If your vehicle is equipped with a trailer, the combined weight includes the tongue load.

Seating capacity:

Total : 5 persons
(Front seat : 2 persons,
Rear seat : 3 persons)

Seating capacity is the maximum number of occupants including a driver, your vehicle may carry.

However, the seating capacity may be reduced based upon the weight of all of the occupants, and the weight of the cargo being carried or towed.

Do not overload the vehicle as there is a limit to the total weight, or load limit including occupants and cargo, the vehicle can carry.

Towing capacity:

* 2.0L T-GDI Engine
Without trailer brakes
: 748 kg (1,650 lbs)
With trailer brakes
: 907 kg (2,000 lbs)

* 2.4L GDI Engine
Without trailer brakes
: 748 kg (1,650 lbs)
With trailer brakes
: 907 kg (2,000 lbs)

Towing capacity is the maximum trailer weight including its cargo weight, your vehicle can tow.

Cargo capacity:

The cargo capacity of your vehicle will increase or decrease depending on the weight and the number of occupants and the tongue load, if your vehicle is equipped with a trailer.

Steps for Determining Correct Load Limit -

(1) Locate the statement "The combined weight of occupants and cargo should never exceed XXX kg or XXX lbs." on your vehicle's placard.

(2) Determine the combined weight of the driver and passengers that will be riding in your vehicle.

(3) Subtract the combined weight of the driver and passengers from XXX kg or XXX lbs.

(4) The resulting figure equals the available amount of cargo and luggage load capacity. For example, if the "XXX" amount equals 635 kg (1400 lbs.) and there will be five 68 kg (150 lb) passengers in your vehicle, the amount of available cargo and luggage load capacity is 295 kg (650 lbs).

(635-340 (5 x 68) = 295 kg or 1400-750 (5 x 150) = 650 lbs.)

(5) Determine the combined weight of luggage and cargo being loaded on the vehicle. That weight may not safely exceed the available cargo and luggage load capacity calculated in Step 4.

(6) If your vehicle will be towing a trailer, load from your trailer will be transferred to your vehicle. Consult this manual to determine how this reduces the available cargo and luggage load capacity of your vehicle.

⚠ WARNING - Loose cargo

Do not travel with unsecured blunt objects in the passenger compartment of your vehicle (e.g. suit cases or unsecured child seats). These items may strike occupant during a sudden stop or crash.

Example 1

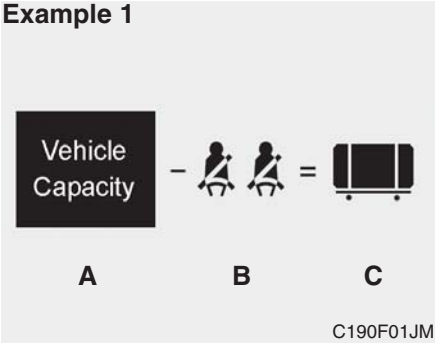

Item	Description	Total
A	Vehicle Capacity Weight	(635 kg) 1400 lbs
B	Subtract Occupant Weight 68 kg (150 lbs) × 2	136 kg (300 lbs)
C	Available Cargo and Luggage weight	499 kg (1100 lbs)

Example 2

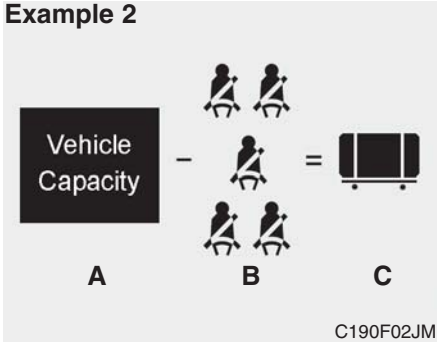

Item	Description	Total
A	Vehicle Capacity Weight	(635 kg) 1400 lbs
B	Subtract Occupant Weight 68 kg (150 lbs) × 5	340 kg (750 lbs)
C	Available Cargo and Luggage weight	295 kg (650 lbs)

Example 3

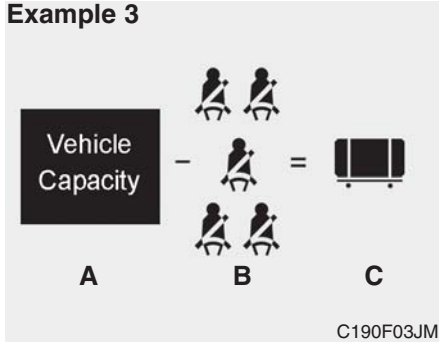

Item	Description	Total
A	Vehicle Capacity Weight	(635 kg) 1400 lbs
B	Subtract Occupant Weight 78 kg (172 lbs) × 5	390 kg (860 lbs)
C	Available Cargo and Luggage weight	245 kg (540 lbs)

Refer to your vehicle’s tire and loading information label for specific information about your vehicle's capacity weight and seating positions. The combined weight of the driver, passengers and cargo should never exceed your vehicle's capacity weight.

Certification label

The certification label is located on the driver's door sill at the center pillar.

This label shows the maximum allowable weight of the fully loaded vehicle. This is called the GVWR (Gross Vehicle Weight Rating). The GVWR includes the weight of the vehicle, all occupants, fuel and cargo.

This label also tells you the maximum weight that can be supported by the front and rear axles, called Gross Axle Weight Rating (GAWR).

To find out the actual loads on your front and rear axles, you need to go to a weigh station and weigh your vehicle. Your dealer can help you with this. Be sure to spread out your load equally on both sides of the centerline.

⚠ WARNING - Over loading

Never exceed the GVWR for your vehicle, the GAWR for either the front or rear axle and vehicle capacity weight. Exceeding these ratings can affect your vehicle's handling and braking ability.

The label will help you decide how much cargo and installed equipment your vehicle can carry.

If you carry items inside your vehicle - like suitcases, tools, packages, or anything else - they are moving as fast as the vehicle. If you have to stop or turn quickly, or if there is a crash, the items will keep going and can cause an injury if they strike the driver or a passenger.

⚠ WARNING - Over loading

Do not overload your vehicle. Overloading your vehicle can cause heat buildup in your vehicle's tires and possible tire failure, increased stopping distances and poor vehicle handling--all of which may result in a crash.

✻ NOTICE

Overloading your vehicle may cause damage. Repairs would not be covered by your warranty. Do not overload your vehicle.

VEHICLE WEIGHT

This chapter will guide you in the proper loading of your vehicle and/or trailer, to keep your loaded vehicle weight within its design rating capability, with or without a trailer. Properly loading your vehicle will provide maximum return of the vehicle design performance. Before loading your vehicle, familiarize yourself with the following terms for determining your vehicle's weight ratings, with or without a trailer, from the vehicle's specifications and the compliance label:

Base curb weight

This is the weight of the vehicle including a full tank of fuel and all standard equipment. It does not include passengers, cargo, or optional equipment.

Vehicle curb weight

This is the weight of your new vehicle when you picked it up from your dealer plus any aftermarket equipment.

Cargo weight

This figure includes all weight added to the Base Curb Weight, including cargo and optional equipment.

GAW (Gross axle weight)

This is the total weight placed on each axle (front and rear) - including vehicle curb weight and all payload.

GAWR (Gross axle weight rating)

This is the maximum allowable weight that can be carried by a single axle (front or rear). These numbers are shown on the compliance label.
The total load on each axle must never exceed its GAWR.

GVW (Gross vehicle weight)

This is the Base Curb Weight plus actual Cargo Weight plus passengers.

GVWR (Gross vehicle weight rating)

This is the maximum allowable weight of the fully loaded vehicle (including all options, equipment, passengers and cargo). The GVWR is shown on the certification label located on the driver’s door sill.

What to do in an emergency

Road warning 6-2
- Hazard warning flasher 6-2

In case of an emergency while driving. 6-3
- If the engine stalls at a crossroad or crossing. 6-3
- If you have a flat tire while driving. 6-3
- If the engine stalls while driving 6-3

If the engine will not start 6-4
- If engine doesn't turn over or turns over slowly 6-4
- If engine turns over normally but does not start 6-4

Emergency starting 6-5
- Jump starting. 6-5
- Push-starting 6-6

If the engine overheats. 6-7

Tire Pressure Monitoring System (TPMS) 6-8
- Check tire pressure 6-8
- Low tire pressure telltale 6-10
- Low tire pressure position telltale 6-10
- Changing a tire with TPMS 6-12

If you have a flat tire (with spare tire). 6-15
- Jack and tools 6-15
- Removing and storing the spare tire 6-16
- Changing tires 6-17

If you have a flat tire (with Tire Mobility Kit) . . 6-24
- Introduction 6-25
- Notes on the safe use of the Tire Mobility Kit 6-25
- Components of the Tire Mobility Kit (TMK). 6-27
- Using the Tire Mobility Kit 6-28
- Distributing the sealant. 6-31
- Checking the tire inflation pressure 6-31
- Technical data 6-32

Towing 6-33
- Towing service 6-33
- Removable towing hook 6-34
- Emergency towing. 6-35

ROAD WARNING

Hazard warning flasher

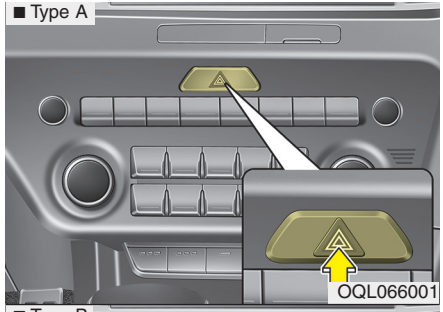

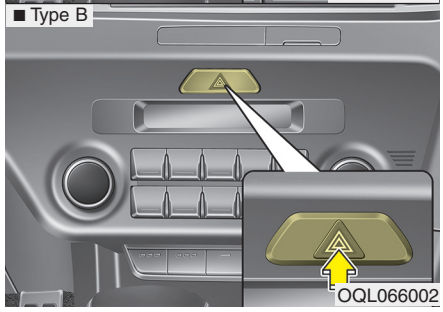

The hazard warning flasher serves as a warning to other drivers to exercise extreme caution when approaching, overtaking, or passing your vehicle.

It should be used whenever emergency repairs are being made or when the vehicle is stopped near the edge of a roadway.

Depress the flasher switch with the ignition switch in any position. The flasher switch is located in the center facia panel. All turn signal lights will flash simultaneously.

- The hazard warning flasher operates whether your vehicle is running or not.
- The turn signals do not work when the hazard flasher is on.
- Care must be taken when using the hazard warning flasher while the vehicle is being towed.

IN CASE OF AN EMERGENCY WHILE DRIVING

If the engine stalls at a crossroad or crossing

If the engine stalls at a crossroad or crossing, set the shift lever in the N (Neutral) position and then push the vehicle to a safe place.

If you have a flat tire while driving

If a tire goes flat while you are driving:

1. Take your foot off the accelerator pedal and let the vehicle slow down while driving straight ahead. Do not apply the brakes immediately or attempt to pull off the road as this may cause a loss of control. When the vehicle has slowed to such a speed that it is safe to do so, brake carefully and pull off the road. Drive off the road as far as possible and park on firm level ground. If you are on a divided highway, do not park in the median area between the two traffic lanes.
2. When the vehicle is stopped, turn on your emergency hazard flashers, set the parking brake and put the transmission in P.
3. Have all passengers get out of the vehicle. Be sure they all get out on the side of the vehicle that is away from traffic.
4. When changing a flat tire, follow the instruction provided later in this section.

If the engine stalls while driving

1. Reduce your speed gradually, keeping a straight line. Move cautiously off the road to a safe place.
2. Turn on your emergency flashers.
3. Try to start the engine again. If your vehicle will not start, contact an authorized Kia dealer or seek other qualified assistance.

✻ NOTICE

If there was a check engine light and loss of power or stall and if safe to do so, wait at least 10 seconds to restart the vehicle after it stalls. This may reset the car so it will no longer run at low power (limp home) condition.

IF THE ENGINE WILL NOT START

If engine doesn't turn over or turns over slowly

1. Be sure the shift lever is in N (Neutral) or P (Park) and the emergency brake is set.
2. Check the battery connections to be sure they are clean and tight.
3. Turn on the interior light. If the light dims or goes out when you operate the starter, the battery is discharged.
4. Check the starter connections to be sure they are securely tightened.
5. Do not push or pull the vehicle to start it. See instructions for "Jump starting".

⚠ WARNING - Push/pull start

Do not push or pull the vehicle to start it. Push or pull starting may cause the catalytic converter to overload and create a fire hazard.

If engine turns over normally but does not start

1. Check the fuel level.
2. With the ignition switch in the LOCK position, check all connectors at the ignition coils and spark plugs. Reconnect any that may be disconnected or loose.
3. Check the fuel line in the engine compartment.
4. If the engine still does not start, call an authorized Kia dealer or seek other qualified assistance.

EMERGENCY STARTING

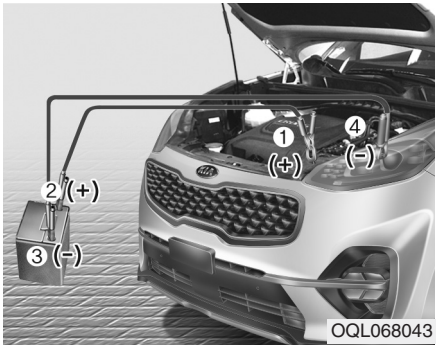

Connect cables in numerical order and disconnect in reverse order.

Jump starting

Jump starting can be dangerous if done incorrectly. Therefore, to avoid harm to yourself or damage to your vehicle or battery, follow these jump starting procedures. If in doubt, we strongly recommend that you have a competent technician or towing service jump start your vehicle.

⚠ CAUTION - Push/pull start to 12 Volt Battery

Use only a 12-volt jumper system. You can damage a 12-volt starting motor, ignition system, and other electrical parts beyond repair by use of a 24-volt power supply (either two 12-volt batteries in series or a 24-volt motor generator set).

⚠ WARNING - Battery

Never attempt to check the electrolyte level of the battery as this may cause the battery to rupture or explode.

⚠ WARNING - Frozen batteries

Do not attempt to jump start the vehicle if the discharged battery is frozen or if the electrolyte level is low as the battery may rupture or explode.

⚠ WARNING - Battery

Keep all flames or sparks away from the battery. The battery produces hydrogen gas which will explode if exposed to flame or sparks.

⚠ WARNING - Sulfuric acid risk

When jump starting your vehicle, be careful not to get acid on yourself, your clothing or on the vehicle. Automobile batteries contain sulfuric acid. This is poisonous and highly corrosive.

Jump starting procedure

1. Make sure the booster battery is 12-volt and that its negative terminal is grounded.
2. If the booster battery is in another vehicle, do not allow the vehicles to come in contact.
3. Turn off all unnecessary electrical loads.
4. Connect the jumper cables in the exact sequence shown in the illustration. First connect one end of a jumper cable to the positive terminal of the discharged battery (1), then connect the other end to the positive terminal of the booster battery (2).

   Proceed to connect one end of the other jumper cable to the negative terminal of the booster battery (3), then the other end to a solid, stationary, metallic point (for example, the engine lifting bracket) away from the battery (4). Do not connect it to or near any part that moves when the engine is cranked.

   Do not allow the jumper cables to contact anything except the correct battery terminals or the correct ground. Do not lean over the battery when making connections.

⚠ WARNING - Battery cables

Do not connect the jumper cable from the negative terminal of the booster battery to the negative terminal of the discharged battery. This can cause the discharged battery to overheat and crack, releasing battery acid.

Make sure to connect one end of the jumper cable to the negative terminal of the booster battery, and the other end to a metalic point, far away from the battery.

5. Start the engine of the vehicle with the booster battery and let it run at 2,000 rpm, then start the engine of the vehicle with the discharged battery.

If the cause of your battery discharging is not apparent, you should have your vehicle checked by an authorized Kia dealer.

Push-starting

Vehicles equipped with automatic transmission lock system cannot be push-started.

Follow the directions in this section for jump-starting.

⚠ WARNING - Tow starting vehicle

Never tow a vehicle to start it.

When the engine starts, the vehicle can suddenly surge forward and could cause a collision with the tow vehicle.

IF THE ENGINE OVERHEATS

If your temperature gauge indicates overheating, you experience a loss of power, or hear loud pinging or knocking, the engine will probably be too hot. If this happens, you should:

1. Pull off the road and stop as soon as it is safe to do so.
2. Place the shift lever in P (for Automatic transmission) and set the parking brake. If the air conditioning is on, turn it off.
3. If engine coolant is running out under the vehicle or steam is coming out from underneath the hood, stop the engine. Do not open the hood until the coolant has stopped running or the steaming has stopped. If there is no visible loss of engine coolant and no steam, leave the engine running and check to be sure the engine cooling fan is operating. If the fan is not running, turn the engine off.
4. Check to see if the water pump drive belt is missing. If it is not missing, check to see that it is tight. If the drive belt seems to be satisfactory, check for coolant leaking from the radiator, hoses or under the vehicle. (If the air conditioning had been in use, it is normal for cold water to be draining from it when you stop).

⚠ WARNING - Under the hood

While the engine is running, keep hair, hands and clothing away from moving parts such as the fan and drive belts to prevent injury.

5. If the water pump drive belt is broken or engine coolant is leaking out, stop the engine immediately and call the nearest authorized Kia dealer for assistance.

⚠ WARNING - Radiator cap

Do not remove the radiator cap when the engine is hot. This may result in coolant being blown out of the opening and cause serious burns.

6. If you cannot find the cause of the overheating, wait until the engine temperature has returned to normal. If coolant has been lost, carefully add coolant to the reservoir to bring the fluid level in the reservoir up to the halfway mark.
7. Proceed with caution, keeping alert for further signs of overheating. If overheating happens again, call an authorized Kia dealer for assistance.

Serious loss of coolant indicates there is a leak in the cooling system and this should be checked as soon as possible by an authorized Kia dealer.

TIRE PRESSURE MONITORING SYSTEM (TPMS) (IF EQUIPPED)

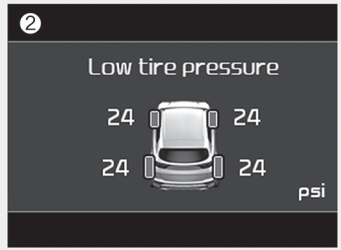

OQL068028L

(1) Low tire pressure telltale / TPMS malfunction indicator

(2) Low tire pressure position telltale (Shown on the LCD display)

Check tire pressure

- You can check the tire pressure in the information mode on the cluster.
  - Refer to “User settings mode” in chapter 4.
- Tire pressure is displayed 1~2 minutes later after driving.
- If tire pressure is not displayed when the vehicle is stopped, “Drive to display” message displays. After driving, check the tire pressure.
- You can change the tire pressure unit in the user settings mode on the instrument cluster.
  - psi, kpa, bar (Refer to “User settings mode” in chapter 4).

✻ NOTICE

- **The tire pressure may change due to factors such as parking condition, driving style, and altitude above sea level.**
- **Low tire pressure warning may sound when a tire’s pressure unit is equal or higher than nearby tires. This is a normal occurrence, which is due to the change in tire pressure along with tire temperature.**
- **The tire pressure shown on the dashboard may differ from the tire pressure measured by tire pressure gauge.**

Each tire, including the spare (if provided), should be checked monthly when cold and inflated to the inflation pressure recommended by the vehicle manufacturer on the vehicle placard or tire inflation pressure label. (If your vehicle has tires of a different size than the size indicated on the vehicle placard or tire inflation pressure label, you should determine the proper tire inflation pressure for those tires.)

As an added safety feature, your vehicle has been equipped with a tire pressure monitoring system (TPMS) that illuminates a low tire pressure telltale when one or more of your tires is significantly under-inflated. Accordingly, when the low tire pressure telltale illuminates, you should stop and check your tires as soon as possible, and inflate them to the proper pressure. Driving on a significantly under-inflated tire causes the tire to overheat and can lead to tire failure. Under-inflation also reduces fuel efficiency and tire tread life, and may affect the vehicle's handling and stopping ability.

Please note that the TPMS is not a substitute for proper tire maintenance, and it is the driver's responsibility to maintain correct tire pressure, even if under-inflation has not reached the level to trigger illumination of the TPMS low tire pressure telltale.

Your vehicle has also been equipped with a TPMS malfunction indicator to indicate when the system is not operating properly. The TPMS malfunction indicator is combined with the low tire pressure telltale. When the system detects a malfunction, the telltale will flash for approximately one minute and then remain continuously illuminated. This sequence will continue upon subsequent vehicle start-ups as long as the malfunction exists. When the malfunction indicator is illuminated, the system may not be able to detect or signal low tire pressure as intended. TPMS malfunctions may occur for a variety of reasons, including the installation of replacement or alternate tires or wheels on the vehicle that prevent the TPMS from functioning properly.

Always check the TPMS malfunction telltale after replacing one or more tires or wheels on your vehicle to ensure that the replacement or alternate tires and wheels allow the TPMS to continue to function properly.

✻ NOTICE

If the TPMS, Low Tire Pressure indicator does not illuminate for 3 seconds when the ignition switch or the Engine start/stop button is turned to the ON position, or if they remain illuminated after coming on for approximately 3 seconds, take your vehicle to your nearest authorized Kia dealer and have the system checked.

Low tire pressure telltale

Low tire pressure position telltale

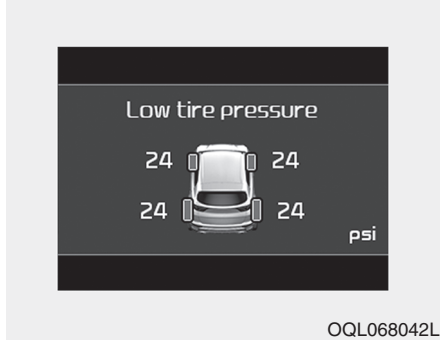

OQL068042L

When the tire pressure monitoring system warning indicators are illuminated, one or more of your tires is significantly under-inflated.

If the telltale illuminates, immediately reduce your speed, avoid hard cornering and anticipate increased stopping distances. You should stop and check your tires as soon as possible.

Inflate the tires to the proper pressure as indicated on the vehicle's placard or tire inflation pressure label located on the driver's side center pillar outer panel. If you cannot reach a service station or if the tire cannot hold the newly added air, replace the low pressure tire with the spare tire.

Then the TPMS malfunction indicator and the Low Tire Pressure telltale may turn on and illuminate after restarting and about 20 minutes of continuous driving before you have the low pressure tire repaired and replaced on the vehicle.

In winter or cold weather, the low tire pressure telltale may be illuminated if the tire pressure was adjusted to the recommended tire inflation pressure in warm weather. It does not mean your TPMS is malfunctioning because the decreased temperature leads to a proportional lowering of tire pressure.

When you drive your vehicle from a warm area to a cold area or from a cold area to a warm area, or the outside temperature is greatly higher or lower, you should check the tire inflation pressure and adjust the tires to the recommended tire inflation pressure.

When filling tires with more air, conditions to turn off the low tire pressure telltale may not be met. This is because a tire inflator has a margin of error in performance. The low tire pressure telltale will be turned off if the tire pressure is above the recommended tire inflation pressure.

⚠ WARNING - Low pressure damage

Do not drive on low pressure tires. Significantly low tire pressure can cause the tires to overheat and fail making the vehicle unstable resulting in increased braking distances and a loss of vehicle control.

TPMS (Tire Pressure Monitoring System) malfunction indicator

The low tire pressure telltale will illuminate after it blinks for approximately one minute when there is a problem with the Tire Pressure Monitoring System. If the system is able to correctly detect an underinflation warning at the same time as system failure then it will illuminate both the TPMS malfunction and low tire pressure position telltales e.g. if Front Left sensor fails, the TPMS malfunction indicator illuminates, but if the Front Right, Rear Left, or Rear Right tire is under-inflated, the low tire pressure position telltales may illuminate together with the TPMS malfunction indicator.

Have the system checked by an authorized Kia dealer as soon as possible to determine the cause of the problem.

- The TPMS malfunction indicator may be illuminated if the vehicle is moving around electric power supply cables or radios transmitters such as at police stations, government and public offices, broadcasting stations, military installations, airports, or transmitting towers, etc. This can interfere with normal operation of the Tire Pressure Monitoring System (TPMS).
- The TPMS malfunction indicator may be illuminated if snow chains are used or some separate electronic devices such as notebook computer, mobile charger, remote starter or navigation etc., are used in the vehicle. This can interfere with normal operation of the Tire Pressure Monitoring System (TPMS).

Changing a tire with TPMS

If you have a flat tire, the Low Tire Pressure telltale will come on. Have the flat tire repaired by an authorized Kia dealer as soon as possible or replace the flat tire with the spare tire.

> ⚠ **CAUTION - Repair Agents**
>
> ***Never use a puncture-repairing agent not approved by Kia to repair and/or inflate a low pressure tire. The sealant not approved by Kia may damage the tire pressure sensor.***

Each wheel is equipped with a tire pressure sensor mounted inside the tire behind the valve stem. You must use TPMS specific wheels. It is recommended that you always have your tires serviced by an authorized Kia dealer.

Even if you replace the low pressure tire with the spare tire, the Low Tire Pressure telltale will remain on until the low pressure tire is repaired and placed on the vehicle.

After you replace the low pressure tire with the spare tire, the TPMS malfunction indicator may illuminate after a few minutes because the TPMS sensor mounted on the spare wheel is not initiated.

Once the low pressure tire is inflated again to the recommended pressure and installed on the vehicle or the TPMS sensor mounted on the replaced spare wheel is initiated by an authorized Kia dealer, the TPMS malfunction indicator and the low tire pressure telltale will turn off within a few minutes of driving.

If the indicator has not disappeared after a few minutes of driving, please visit an authorized Kia dealer.

If an original mounted tire is replaced with the spare tire, the TPMS sensor on the replaced spare wheel should be initiated and the TPMS sensor on the original mounted wheel should be deactivated. If the TPMS sensor on the original mounted wheel located in the spare tire carrier still activates, the tire pressure monitoring system may not operate properly. Have the tire with TPMS serviced or replaced by an authorized Kia dealer.

You may not be able to identify a low tire by simply looking at it. Always use a good quality tire pressure gauge to measure the tire's inflation pressure. Please note that a tire that is hot (from being driven) will have a higher pressure measurement than a tire that is cold (from sitting stationary for at least 3 hours and driven less than 1.6 km (1 mile) during that 3 hour period).

Allow the tire to cool before measuring the inflation pressure. Always be sure the tire is cold before inflating to the recommended pressure.

A cold tire means the vehicle has been sitting for 3 hours and driven for less than 1.6 km (1 mile) in that 3 hour period.

Never use tire sealant if your vehicle is equipped with a Tire Pressure Monitoring System. The liquid sealant can damage the tire pressure sensors.

- The TPMS cannot alert you to severe and sudden tire damage caused by external factors such as nails or road debris.
- If you feel any vehicle instability, immediately take your foot off the accelerator, apply the brakes gradually and with light force, and slowly move to a safe position off the road.

✻ NOTICE - Protecting TPMS

Tampering with, modifying, or disabling the Tire Pressure Monitoring System (TPMS) components may interfere with the system's ability to warn the driver of low tire pressure conditions and/or TPMS malfunctions. Tampering with, modifying, or disabling the Tire Pressure Monitoring System (TPMS) components may void the warranty for that portion of the vehicle.

This device complies with Industry Canada licence-exempt RSS standard(s).

Operation is subject to the following two conditions:

(1) This device may not cause interference, and

(2) This device must accept any interference, including interference that may cause undesired operation of the device.

IF YOU HAVE A FLAT TIRE (WITH SPARE TIRE, IF EQUIPPED)

Jack and tools

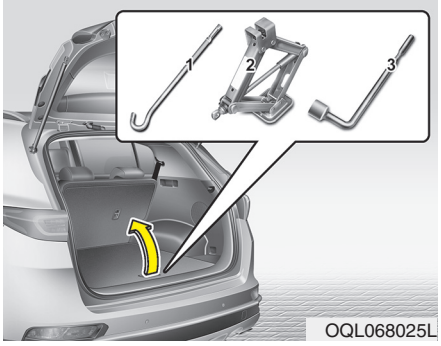

The jack and wheel lug nut wrench are stored in the luggage compartment.

Remove the panel to find the following tools shown in the illustration.

(1) Jack handle

(2) Jack

(3) Wheel lug nut wrench

Jacking instructions

The jack is provided for emergency tire changing only.

To prevent the jack from “rattling” while the vehicle is in motion, store it properly.

Follow jacking instructions to reduce the possibility of bodily injury.

⚠ WARNING - Tire Jack

Do not place any portion of your body under a vehicle that is only supported by a jack since the vehicle can easily roll off the jack. Use vehicle support stands.

⚠ WARNING - Changing tires

Never attempt vehicle repairs in the traffic lanes of a public road or highway.

- Always move the vehicle completely off the road and onto the shoulder before trying to change a tire. The jack should be used on a firm level ground. If you cannot find a firm, level place off the road, call a towing service company for assistance.
- Be sure to use the correct front and rear jacking positions on the vehicle; never use the bumpers or any other part of the vehicle for jack support.
- Do not allow anyone to remain in the vehicle while it is on the jack.
- Make sure any children present are in a secure place away from the road and from the vehicle to be raised with the jack.

⚠ WARNING - Running vehicle on jack

Do not start or run the engine of the vehicle while the vehicle is on the jack as this may cause the vehicle to fall off the jack.

Removing and storing the spare tire

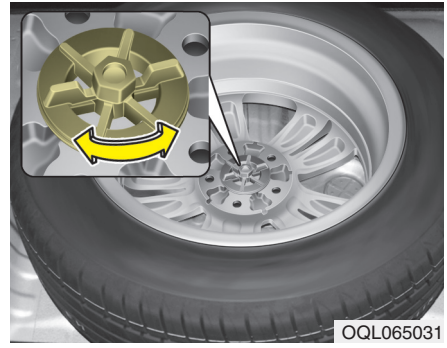

Turn the tire hold-down wing bolt counterclockwise.

Store the tire in the reverse order of removal.

To prevent the spare tire and tools from “rattling” while the vehicle is in motion, store them properly.

If it is hard to loosen the tire hold-down wing bolt by hand, you can loosen it easily using the jack handle.

1. Put the jack handle (1) inside of the tire hold-down wing bolt.
2. Turn the tire hold-down wing bolt counterclockwise with the jack handle.

Use caution when utilizing the sharp jack handle.

Changing tires

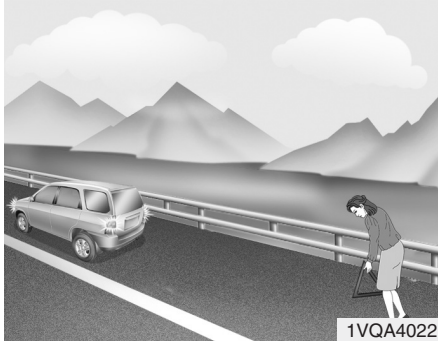
1VQA4022

1. Park on a level surface and apply the parking brake firmly.
2. Place the transmission shift lever in P (Park) with automatic transmission.
3. Activate the hazard warning flashers.

1VQA4023

4. Remove the wheel lug nut wrench, jack and spare tire from the vehicle.
5. Block both the front and rear of the wheel that is diagonally opposite from the jack position.

⚠ WARNING - Jack location

To reduce the possibility of injury, be sure to use only the jack provided with the vehicle in the correct jack position; never use any other part of the vehicle for jack support.

⚠ WARNING - Changing a tire

- **To prevent vehicle movement while changing a tire, always set the parking brake fully, and always block the wheel diagonally opposite the wheel being changed.**
- **We recommend that the wheels of the vehicle be blocked, and that no person remain in a vehicle that is being jacked.**

OQL065029

6. Loosen the wheel lug nuts counterclockwise one turn each, but do not remove any nut until the tire has been raised off the ground.

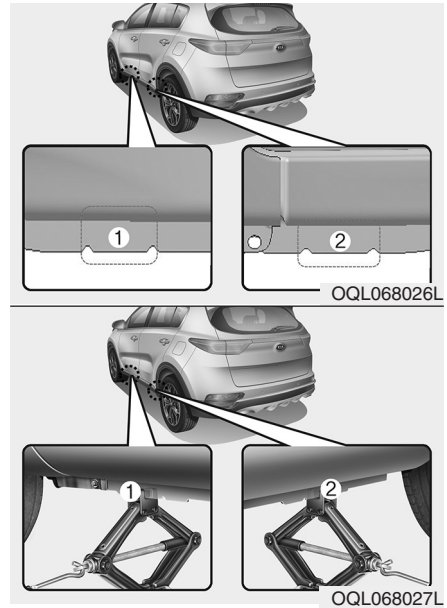

7. Place the jack at the front (1) or rear (2) jacking position closest to the tire you are changing. Place the jack at the designated locations under the frame. The jacking positions are plates welded to the frame with two tabs and a raised dot to line up with the jack.

OQL065028

8. Insert the wheel lug nut wrench into the jack and turn it clockwise, raising the vehicle until the tire just clears the ground. This measurement is approximately 30 mm (1 in.).

   Before removing the wheel lug nuts, make sure the vehicle is stable and that there is no chance for movement or slippage.

9. Loosen the wheel nuts and remove them with your fingers. Slide the wheel off the studs and lay it flat so it cannot roll away. To put the wheel on the hub, pick up the spare tire, line up the holes with the studs and slide the wheel onto them. If this is difficult, tip the wheel slightly and get the top hole in the wheel lined up with the top stud. Jiggle the wheel back and forth until the wheel can slide over the other studs.

Wheels may have sharp edges. Handle them carefully to avoid possible severe injury. Before putting the wheel into place, be sure that there is nothing on the hub or wheel (such as mud, tar, gravel, etc.) that prevents the wheel from fitting solidly against the hub.

⚠ WARNING - Installing a wheel

Make sure the wheel makes good contact with the hub when installed. If the contact of the mounting surface between the wheel and hub is not good, the wheel nuts could come loose and cause the loss of a wheel. Loss of a wheel may result in loss of control of the vehicle.

10. To install the wheel, hold it on the studs, put the wheel nuts on the studs and tighten them finger tight. Jiggle the tire to be sure it is completely seated, then tighten the nuts as much as possible with your fingers again.
11. Insert the wrench into the jack and lower the vehicle to the ground by turning the wheel nut wrench counterclockwise.

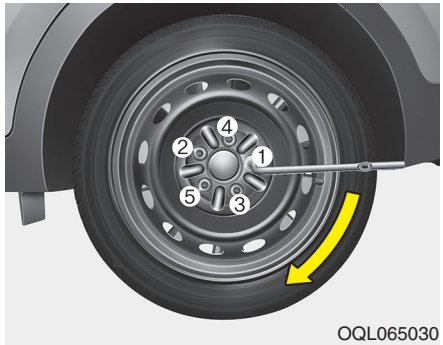

OQL065030

Position the wrench as shown in the drawing and tighten the wheel nuts. Be sure the socket is seated completely over the nut. Do not stand on the wrench handle or use an extension pipe over the wrench handle. Go around the wheel, tightening every nut following the numerical sequence shown in the image until they are all tight. Double-check each nut for tightness. After changing wheels, have an authorized Kia dealer tighten the wheel nuts to their proper torque as soon as possible.

Wheel nut tightening torque:

11 ~ 13 kg·m (79 ~ 94 lb·ft)

If you have a tire gauge, remove the valve cap and check the air pressure. If the pressure is lower than recommended, drive slowly to the nearest service station and inflate to the correct pressure. If it is too high, adjust it until it is correct. Always reinstall the valve cap after checking or adjusting the tire pressure. If the cap is not replaced, dust and dirt may get into the tire valve and air may leak from the tire. If you lose a valve cap, buy another and install it as soon as possible.

After you have changed the wheels, always secure the flat tire in its place and return the jack and tools to their proper storage locations.

⚠ **CAUTION - Reusing lug nuts**

Make certain during wheel removal that the same nuts that were removed are reinstalled - or, if replaced, that nuts with metric threads and the same chamfer configuration are used. Your vehicle has metric threads on the wheel studs and nuts. Installation of a non-metric thread nut on a metric stud will not secure the wheel to the hub properly and will damage the stud so that it must be replaced.

Note that most lug nuts do not have metric threads. Be sure to use extreme care in checking for thread style before installing aftermarket lug nuts or wheels. If in doubt, consult an authorized Kia dealer.

⚠ WARNING - Wheel studs

If the studs are damaged, they may lose their ability to retain the wheel. This could lead to the loss of the wheel and a collision resulting in serious injuries.

To prevent the jack, wheel lug nut wrench and spare tire from rattling while the vehicle is in motion, store them properly.

Check the inflation pressures as soon as possible after installing the spare tire. Adjust it to the specified pressure, if necessary. Refer to “Tires and wheels” in section 7.

Important - use of compact spare tire

Your vehicle is equipped with a compact spare tire. This compact spare tire takes up less space than a regular-size tire. This tire is smaller than a conventional tire and is designed for temporary use only.

- You should drive carefully when the compact spare is in use. The compact spare should be replaced by the proper conventional tire and rim at the first opportunity.
- The operation of this vehicle is not recommended with more than one compact spare tire in use at the same time.

⚠ WARNING - Spare tire

The compact spare tire is for emergency use only. Do not operate your vehicle on this compact spare at speeds over 80 km/h (50 mph). The original tire should be repaired or replaced as soon as possible to avoid failure of the spare possibly leading to bodily injury or death.

The compact spare should be inflated to 420 kPa (60 psi).

✻ NOTICE

Check the inflation pressure after installing the spare tire. Adjust it to the specified pressure, as necessary.

When using a compact spare tire, observe the following precautions:

- Under no circumstances should you exceed 80 km/h (50 mph); a higher speed could damage the tire.
- Ensure that you drive slowly enough for the road conditions to avoid all hazards. Any road hazard, such as a pothole or debris, could seriously damage the compact spare.
- Any continuous road use of this tire could result in tire failure, loss of vehicle control, and possible bodily injury.
- Do not exceed the vehicle's maximum load rating or the load-carrying capacity shown on the sidewall of the compact spare tire.
- Avoid driving over obstacles. The compact spare tire diameter is smaller than the diameter of a conventional tire and reduces the ground clearance approximately 25 mm (1 inch), which could result in damage to the vehicle.
- Do not take this vehicle through an automatic vehicle wash while the compact spare tire is installed.
- Do not use the compact spare tire on any other vehicle because this tire has been designed especially for your vehicle.
- The compact spare tire's tread life is shorter than a regular tire. Inspect your compact spare tire regularly and replace worn compact spare tires with the same size and design, mounted on the same wheel.
- The compact spare tire should not be used on any other wheels, nor should standard tires, snow tires, wheel covers or trim rings be used with the compact spare wheel. If such use is attempted, damage to these items or other vehicle components may occur.
- Do not use more than one compact spare tire at a time.
- Do not tow a trailer while the compact spare tire is installed.

Jack label

■ Example

• Type A

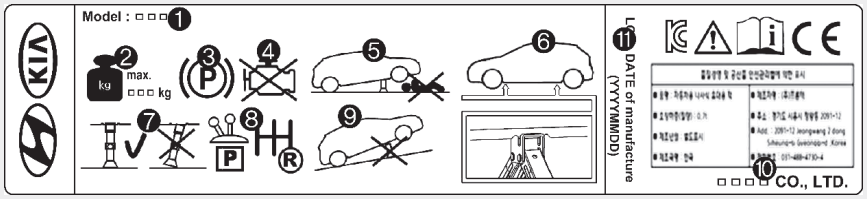

OHYK064001

• Type B

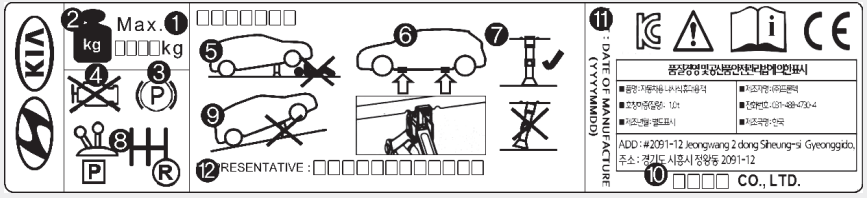

OHYK064005

❊ The actual Jack label in the vehicle may differ from the illustration.
For more detailed specifications, refer to the label attached to the jack.

1. Model Name
2. Maximum allowable load
3. When using the jack, set your parking brake.
4. When using the jack, stop the engine.
5. Do not get under a vehicle that is supported by a jack.
6. The designated locations under the frame
7. When supporting the vehicle, the base plate of jack must be vertical under the lifting point.
8. Move the shift lever to the P position on vehicles with automatic transmission.
9. The jack should be used on firm level ground.
10. Jack manufacturer
11. Production date
12. Representative company and address

IF YOU HAVE A FLAT TIRE (WITH TIRE MOBILITY KIT) (IF EQUIPPED)

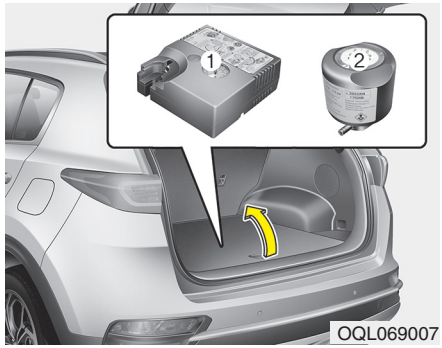

Please read the instructions before using the Tire Mobility Kit.

(1) Compressor

(2) Sealant bottle

The Tire Mobility Kit is a temporary fix to the tire and the tire should be inspected by an authorized Kia dealer as soon as possible.

⚠ CAUTION - One sealant for one tire

When two or more tires are flat, do not use the Tire Mobility Kit because the canister of sealant in the Tire Mobility Kit only contains enough sealant for one flat tire.

⚠ WARNING - Speed with temporary fix

Do not exceed a speed of 50 mph (80 km/h) when driving with a tire sealed with the Tire Mobility Kit. While driving, if you experience any unusual vibration, ride disturbance or noise, reduce your speed and drive with caution until you can safely pull off of the side of the road.

⚠ WARNING - Tire wall

Do not use the Tire Mobility Kit to repair large punctures or damage to the tire sidewalls. In these situations, the tire cannot be sealed completely and air will leak from the tire. This can result in tire failure.

⚠ WARNING - Temporary fix

Have your tire repaired as soon as possible. The tire may lose air pressure at any time after inflating with the Tire Mobility Kit.

⚠ **CAUTION**

- ***When replacing or repairing the tire after using tire sealant, make certain to remove the sealant attached to the inner part of the tire and wheel. If the sealant is not removed, noise and vibration may occur.***
- ***If the TPMS warning light illuminates after using the Tire Mobility Kit, have your vehicle inspected by an authorized Kia dealer.***
- ***When repairing a flat tire with the Tire Mobility Kit (TMK), quickly remove the sealant on the tire pressure sensor and wheel. When installing the repaired tire and wheel, tighten the wheel nut to a torque value of 11 ~ 13 kgf·m.***

Introduction

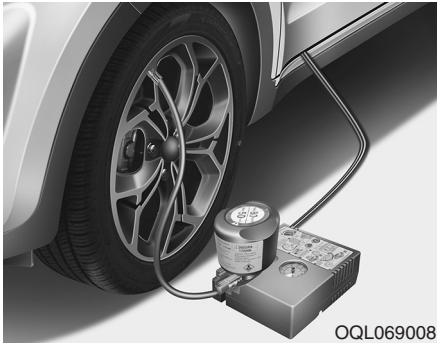

With the Tire Mobility Kit (TMK) you stay mobile even after experiencing a tire puncture.

The system compressor and sealing compound effectively seal most punctures in a passenger car tire caused by nails or similar objects and reinflate the tire.

After you ensure that the tire is properly sealed, you can drive cautiously on the tire (up to 200 km (120 miles)) at a max. speed of 80 km/h (50 mph) in order to reach a vehicle or tire dealer to have the tire replaced.

It is possible that some tires, especially with larger punctures or damage to the sidewall, cannot be sealed completely.

Air pressure loss in the tire may adversely affect tire performance.

For this reason, you should avoid abrupt steering or other driving maneuvers, especially if the vehicle is heavily loaded or if a trailer is in use.

The Tire Mobility Kit is not designed or intended as a permanent tire repair method and is to be used for one tire only.

This instruction shows you step by step how to temporarily seal the puncture.

Read the section "Notes on the safe use of the Tire Mobility Kit".

⚠ WARNING

Do not use the Tire Mobility Kit if a tire is severely damaged.

Only punctured areas located within the tread region of the tire can be sealed using the Tire Mobility Kit.

Notes on the safe use of the Tire Mobility Kit

- Park your car at the side of the road so that you can work with the Tire Mobility Kit away from moving traffic. Place your warning triangle in a prominent place to make passing vehicles aware of your location.
- To be sure your vehicle will not move, even when you're on fairly level ground, always set your parking brake.
- Only use the Tire Mobility Kit for sealing/inflation passenger car tires. Do not use on motorcycles, bicycles or any other type of tires.
- Do not remove any foreign objects-such as nails or screws -that have penetrated the tire.
- Before using the Tire Mobility Kit, read the precautionary advice printed on the sealant bottle!
- Provided the car is outdoors, leave the engine running. Otherwise operating the compressor may eventually drain the car battery.
- Never leave the Tire Mobility Kit unattended while it is being used.
- Do not leave the compressor running for more than 10 min. at a time or it may overheat.
- Do not use the Tire Mobility Kit if the ambient temperature is below -30°C (-22°F).
- When the tire and wheel are damaged, do not use Tire Mobility Kit for your safety.

⚠ WARNING

- **If sealant comes into contact with skin, wash the affected areas thoroughly. Seek medical attention if irritation develops and persists.**
- **If sealant comes into contact with the eyes, flush eyes with water for at least 15 minutes. Seek medical attention if irritation persists.**
- **If sealant is swallowed, call a physician or poison control center immediately.**

  Exposure to the sealant for a long time may cause damage to the bodily tissues.

Components of the Tire Mobility Kit (TMK)

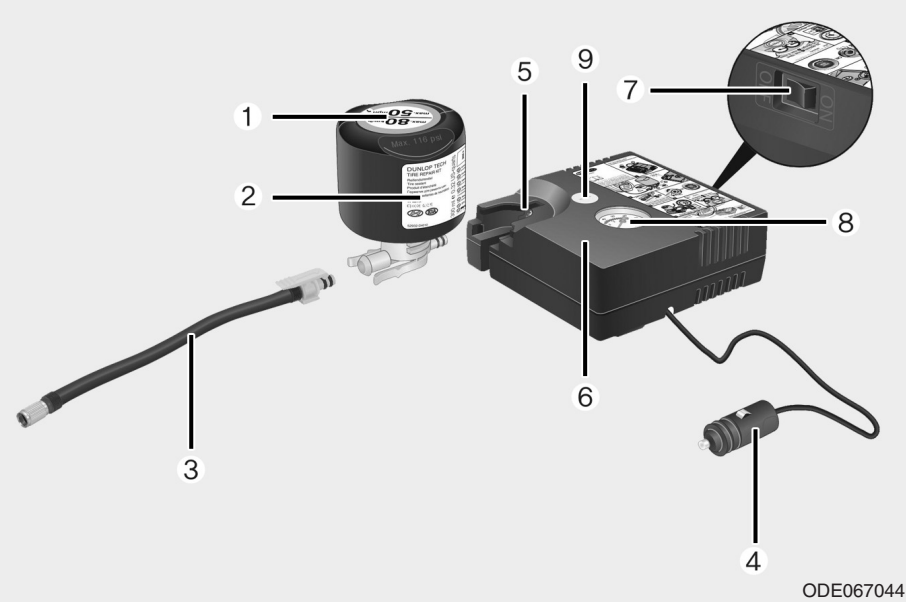

1. Speed restriction label
2. Sealant bottle and label with speed restriction
3. Filling hose from sealant bottle to wheel
4. Connectors and cable for the power outlet direct connection
5. Holder for the sealant bottle
6. Compressor
7. On/off switch

8. Pressure gauge for displaying the tire inflation pressure
9. Button for reducing tire inflation pressure

Connectors and cable are stored in the compressor housing.

⚠ WARNING - Expired sealant

Do not use the tire sealant after the sealant has expired (after the expiration date on the sealant container). This can increase the risk of tire failure.

⚠ WARNING - Sealant

- **Keep out of reach of children.**
- **Avoid contact with eyes.**
- **Do not swallow.**

✻ NOTICE

The sealant container and insert hose (3) cannot be reused. Purchase an extra after use.

Using the Tire Mobility Kit

1. Detach the speed restriction label (1) from the sealant bottle (2), and place it in a highly visible place inside the vehicle such as on the steering wheel to remind the driver not to drive too fast.
2. Filling the sealant Strictly follow the specified sequence, otherwise the sealant may escape under high pressure.

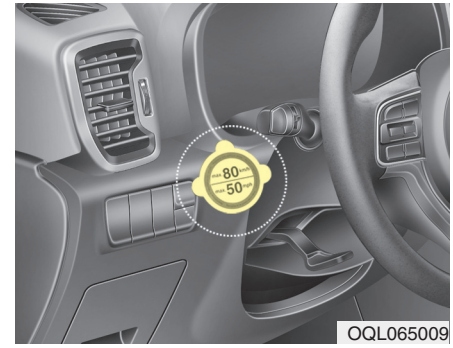

OQL065009

⚠ CAUTION

Before using the Tire Mobility Kit, please read carefully the instruction attached on the sealant case. Detach the speed limit label on the sealant case and put it on a highly visible place. Always drive within the speed limit.

3. Shake the sealant bottle.

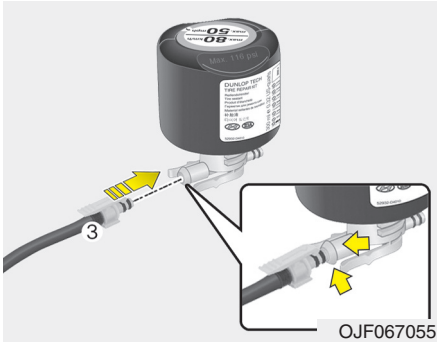

4. Connect the filling hose (3) onto the connector of the sealant bottle.
5. Ensure that button (7) on the compressor is not pressed.

6. Unscrew the valve cap from the valve of the defective wheel and screw filling hose (3) of the sealant bottle onto the valve.

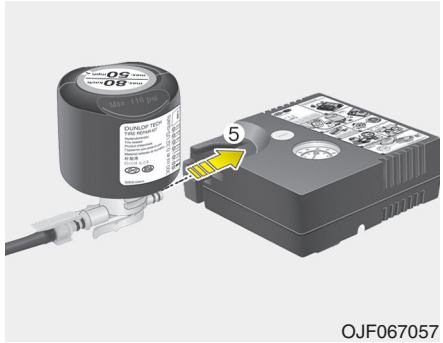

OJF067057

7. Insert the sealant bottle into the housing (5) of the compressor so that the bottle is upright.
8. Ensure that the compressor is switched off.

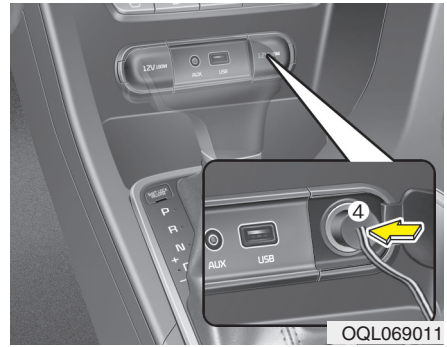

OQL069011

9. Connect between compressor and the vehicle power outlet using the cable and connectors (4).
10. With the engine start/stop button position on: switch on the compressor and let it run for approximately 5~7 minutes to fill the sealant up to proper pressure (refer to the "Tires and wheels" in chapter 8). Be careful not to over-inflate the tire and stay away from the tire when filling it. When the tire and wheel are damaged, do not use Tire Mobility Kit for your safety.

⚠ WARNING - Tire pressure

Do not attempt to drive your vehicle if the tire pressure is below 200 kPa (29 psi, 2 bar).

This could result in an accident due to sudden tire failure.

11. Switch off the compressor.
12. Detach the hose from the sealant bottle connector and from the tire valve.

Return the Tire Mobility Kit to its storage location in the vehicle.

⚠ WARNING

Carbon monoxide poisoning and suffocation is possible if the engine is left running in a poorly ventilated or unventilated location (such as inside a building).

Distributing the sealant

13. Immediately drive approximately 7 ~ 10 km (4 ~ 6 miles or, about 10 min) to evenly distribute the sealant in the tire.

⚠ CAUTION

Do not exceed a speed of 80 km/h (50 mph). If possible, do not fall below a speed of 20 km/h (12 mph).

While driving, if you experience any unusual vibration, ride disturbance or noise, reduce your speed and drive with caution until you can safely pull off of the side of the road. Call for road side service or towing.

When you use the Tire Mobility Kit, the wheel may be stained by sealant. Therefore, remove the tire pressure sensors and have your vehicle inspected by an authorized Kia dealer.

Checking the tire inflation pressure

1. After driving approximately 7 ~ 10 km (4 ~ 6 miles or about 10 minutes), stop at a suitable location.
2. Connect the filling hose (3) of the compressor (clip mounted side) directly and then connect the filling hose (3) (opposite side) to the tire valve.
3. Connect between compressor and the vehicle power outlet using the cable and connectors.
4. Adjust the tire inflation pressure to 200 kPa (29 psi). With the Engine Start/Stop button ON position, proceed as follows.
   - **To increase the inflation pressure:** Switch on the compressor, position I. To check the current inflation pressure setting, briefly switch off the compressor.

⚠ WARNING

Do not let the compressor run for more than 10 minutes, otherwise the device will overheat and may be damaged.

- **To reduce the inflation pressure:** Press the button (9) on the compressor.

⚠ WARNING

The tire inflation pressure must be at least 200 kPa (29 psi, 2 bar).

If it is not, do not continue driving.

Call for road side service or towing.

Technical Data

System voltage: DC 12 V

Working voltage: DC 10 - 15 V

Amperage rating: max. 15 A

Suitable for use at temperatures:
-30 ~ +70°C (-22 ~ +158°F)

Max. working pressure:
6 bar (87 psi)

Size

Compressor: 168 x 150 x 68 mm (6.6 x 5.9 x 2.7 in.)

Sealant bottle: 104 x ø 85 mm (4.1 x ø 3.3 in.)

Compressor weight:
1.05 kg (2.31 lbs)

Sealant volume:
300 ml (18.3 cu. in.)

❊ Sealant and spare parts can be obtained and replaced at an authorized vehicle or tire dealer. Empty sealant bottles may be disposed of at home. Liquid residue from the sealant should be disposed of by your vehicle or tire dealer or in accordance with local waste disposal regulations.

TOWING

Towing service

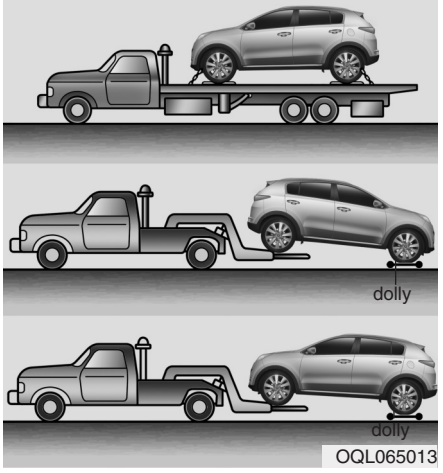

If emergency towing is necessary, we recommend having it done by an authorized Kia dealer or a commercial tow-truck service. Proper lifting and towing procedures are necessary to prevent damage to the vehicle. The use of wheel dollies or flatbed is recommended.

On AWD vehicles, your vehicle must be towed with a wheel lift and dollies or flatbed equipment with all the wheels off the ground.

⚠ CAUTION

The AWD vehicle should never be towed with the wheels on the ground. This can cause serious damage to the transmission or the AWD system.

On FWD vehicles, it is acceptable to tow the vehicle with the rear wheels on the ground (without dollies) and the front wheels off the ground.

If any of the loaded wheels or suspension components are damaged or the vehicle is being towed with the front wheels on the ground, use a towing dolly under the front wheels.

When being towed by a commercial tow truck and wheel dollies are not used, the front of the vehicle should always be lifted, not the rear.

⚠ WARNING - Side and curtain Air bag

If your vehicle is equipped with side and curtain air bag, set the ignition switch to LOCK or ACC position when the vehicle is being towed.

The side and curtain air bag may deploy when the ignition is ON, and the rollover sensor detects the situation as a rollover.

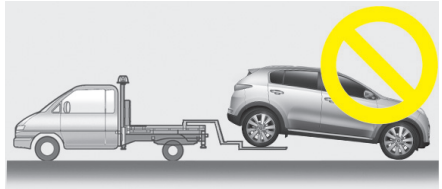

OQL065016

OQL065015

⚠ **CAUTION - Towing**

- ***Do not tow the vehicle backwards with the front wheels on the ground as this may cause damage to the vehicle.***
- ***Do not tow with sling-type equipment. Use wheel lift or flatbed equipment.***

When towing your vehicle in an emergency without wheel dollies :

1. Set the ignition switch in the ACC position.
2. Place the transmission shift lever in N (Neutral).
3. Release the parking brake.

⚠ **CAUTION - Towing gear position**

Failure to place the transmission shift lever in N (Neutral) may cause internal damage to the transmission.

Removable towing hook (if equipped)

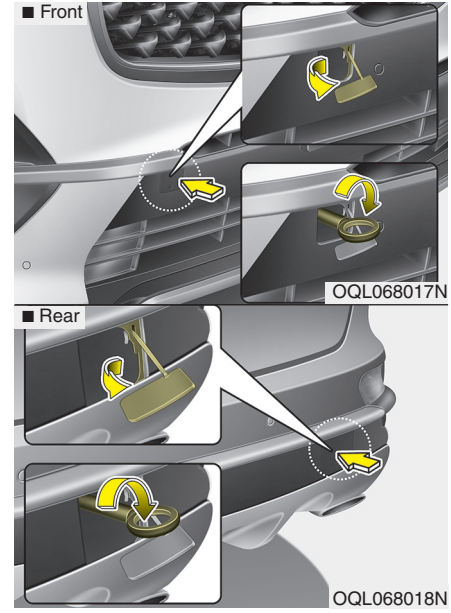

1. Open the liftgate, and remove the towing hook from the tool case.
2. Remove the hole cover pressing the lower part of the cover on the bumper.

3. Install the towing hook by turning it clockwise into the hole until it is fully secured.
4. Remove the towing hook and install the cover after use.

Emergency towing

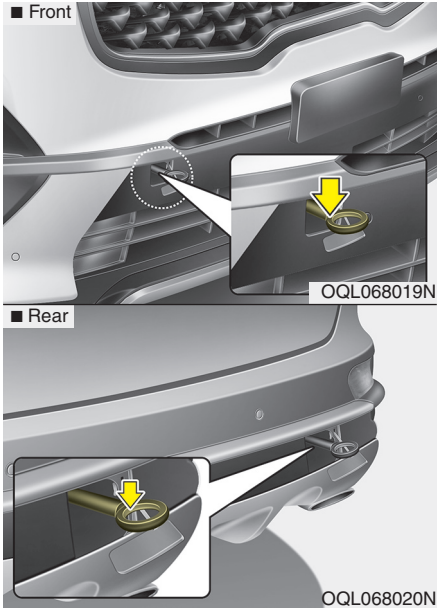

If towing is necessary, we recommend you to have it done by an authorized Kia dealer or a commercial tow truck service.

If towing service is not available in an emergency, your vehicle may be temporarily towed using a cable or chain secured to the emergency towing hook under the front (or rear) of the vehicle. Use extreme caution when towing the vehicle. A driver must be in the vehicle to steer it and operate the brakes.

Towing in this manner may be done only on hard-surfaced roads for a short distance and at low speed. Also, the wheels, axles, power train, steering and brakes must all be in good condition.

- Do not use the tow hooks to pull a vehicle out of mud, sand or other conditions from which the vehicle cannot be driven out under its own power.
- Avoid towing a vehicle heavier than the vehicle doing the towing.
- The drivers of both vehicles should communicate with each other frequently.

⚠ CAUTION

Using a portion of the vehicle other than the tow hooks for towing may damage the body of your vehicle.

- Attach a towing strap to the tow hook.
- Use only a cable or chain specifically intended for use in towing vehicles. Securely fasten the cable or chain to the towing hook provided.
- Accelerate or decelerate the vehicle in a slow and gradual manner while maintaining tension on the tow rope or chain to start or drive the vehicle, otherwise tow hooks and the vehicle may be damaged.
- Before emergency towing, check if the hook is not broken or damaged.
- Fasten the towing cable or chain securely to the hook.
- Do not jerk the hook. Apply it steadily and with even force.
- To avoid damaging the hook, do not pull from the side or at a vertical angle. Always pull straight ahead.

⚠ WARNING - Emergency Towing Precautions

Use extreme caution when towing the vehicle.

- **Avoid sudden starts or erratic driving maneuvers which would place excessive stress on the emergency towing hook and towing cable or chain. The hook and towing cable or chain may break and cause serious injury or damage.**
- **If the disabled vehicle is unable to be moved, do not forcibly continue the towing. We recommend that you contact an authorized Kia dealer or a commercial tow truck service for assistance.**
- **Tow the vehicle as straight ahead as possible.**
- **Keep away from the vehicle during towing.**

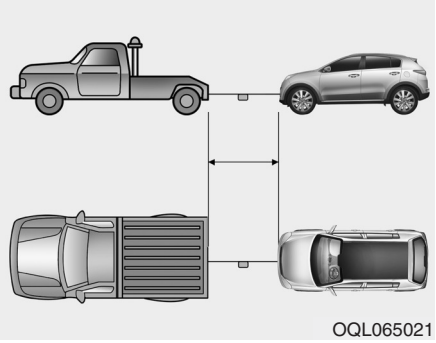

- Use a towing strap less than 5 m (16 feet) long. Attach a white or red cloth (about 30 cm (12 inches) wide) in the middle of the strap for easy visibility.
- Drive carefully so that the towing strap is not loosened during towing.
- The driver must be in the vehicle for steering and braking operations when the vehicle is towed and passengers other than the driver must not be allowed to be on board.

Emergency towing precautions

- Turn the ignition switch to ACC so the steering wheel isn't locked.
- Place the transmission shift lever in N (Neutral).
- Release the parking brake.
- Press the brake pedal with more force than normal since you will have reduced brake performance.
- More steering effort will be required because the power steering system will be disabled.
- If you are driving down a long hill, the brakes may overheat and brake performance will be reduced. Stop often and let the brakes cool off.
- The vehicle should be towed at a speed of 25 km/h or less within the distance of 20 km.
- If the car is being towed with all four wheels on the ground, it can be towed only from the front. Be sure that the transmission is in neutral. Be sure the steering is unlocked by placing the ignition switch in the ACC position. A driver must be in the towed vehicle to operate the steering and brakes.

⚠ CAUTION - Automatic transmission

- ***To avoid serious damage to the automatic transmission, limit the vehicle speed to 15 km/h (10 mph) and drive less than 1.5 km (1 mile) when towing.***
- ***Before towing, check the automatic transmission for fluid leaks under your vehicle. If the automatic transmission fluid is leaking, flatbed equipment or a towing dolly must be used.***

Maintenance

Engine compartment 7-3
Maintenance services 7-4
• Owner's responsibility 7-4
• Owner maintenance precautions 7-5
Owner maintenance 7-7
• Owner maintenance schedule. 7-7
Scheduled maintenance service. 7-9
Explanation of scheduled maintenance items . . . 7-21
Checking fluid levels 7-26
Engine oil. 7-27
• Checking the engine oil level 7-27
• Changing the engine oil and filter 7-28
Engine coolant 7-29
• Checking the coolant level 7-29
• Changing the coolant 7-32
Brake fluid 7-33
• Checking the brake fluid level 7-33
Washer fluid 7-34
• Checking the washer fluid level. 7-34
Parking brake. 7-35
• Checking the parking brake. 7-35
Air cleaner. 7-36
• Filter replacement 7-36
Climate control air filter 7-38
• Filter inspection 7-38
Wiper blades 7-40
• Blade inspection. 7-40
• Blade replacement 7-40
Battery 7-43
• For best battery service 7-43
• Recharging the battery 7-44
• Reset items 7-45
Tires and wheels 7-46
• Tire care 7-46
• Recommended cold tire inflation pressures 7-46
• Tire pressure 7-47
• Checking tire inflation pressure. 7-47
• Tire rotation 7-48
• Wheel alignment and tire balance. 7-49
• Tire replacement 7-50
• Wheel replacement 7-51
• Tire traction 7-51
• Tire maintenance 7-51
• Tire sidewall labeling 7-51
• All season tires 7-58
• Summer tires 7-58
• Snow tires 7-58

• Radial-ply tires 7-59
• Low aspect ratio tire 7-59
Fuses 7-61
• Inner panel fuse replacement 7-63
• Engine compartment fuse replacement 7-65
• Fuse/relay panel description 7-67
Light bulbs 7-79
• Bulb replacement precaution 7-79
• Light bulb position (Front) 7-81
• Light bulb position (Rear) 7-82
• Light bulb position (Side) 7-83
• Headlamp (High/Low beam) bulb replacement 7-83
• Front turn signal lamp bulb replacement 7-84
• Position lamp + DRL bulb replacement 7-85
• Front fog lamp (Bulb and LED type) bulb replacement 7-86
• Stop and tail lamp bulb replacement 7-86
• Tail lamp (inside) bulb replacement 7-87
• Stop and tail lamp (LED type) bulb replacement . . 7-88
• Back-up lamp and Rear turn signal lamp (Bulb type) bulb replacement 7-89
• High mounted stop lamp (LED type) bulb replacement 7-89
• License plate lamp (Bulb type) bulb replacement . . 7-89
• Side repeater lamp (LED type) bulb replacement . . 7-90
• Map lamp (Bulb and LED type) bulb replacement . . 7-90
• Vanity mirror lamp (Bulb type) bulb replacement . . 7-91
• Room lamp (Bulb type) bulb replacement 7-91
• Personal lamp (LED type) bulb replacement 7-92
• Glove box lamp (Bulb type) bulb replacement 7-92
• Liftgate room lamp (Bulb type) bulb replacement . . 7-93
Appearance care 7-94
• Exterior care 7-94
• Interior care 7-99
Emission control system 7-102
• Crankcase emission control system 7-102
• Evaporative emission control (including ORVR: Onboard Refueling Vapor Recovery) system 7-102
• Exhaust emission control system 7-103

ENGINE COMPARTMENT

■ **Theta II 2.4L GDI**

■ **Theta II 2.0L T-GDI**

1. Engine coolant reservoir
2. Engine oil filler cap
3. Brake fluid reservoir
4. Air cleaner
5. Fuse box
6. Negative battery terminal
7. Positive battery terminal
8. Engine oil dipstick
9.Windshield washer fluid reservoir

❊ The actual engine compartment in the vehicle may differ from the illustration.

OQLE075095/OQLA075109

MAINTENANCE SERVICES

You should exercise the utmost care to prevent damage to your vehicle and injury to yourself whenever performing any maintenance or inspection procedures.

Should you have any doubts concerning the inspection or servicing of your vehicle, we strongly recommend that you have an authorized Kia dealer perform this work.

An authorized Kia dealer has factory-trained technicians and genuine Kia parts to service your vehicle properly. For expert advice and quality service, see an authorized Kia dealer.

Inadequate, incomplete or insufficient servicing may result in operational problems with your vehicle that could lead to vehicle damage, an accident, or bodily injury.

Owner’s responsibility

✻ NOTICE

Maintenance Service and Record Retention are the owner's responsibility.
You should retain documents that show proper maintenance has been performed on your vehicle in accordance with the scheduled maintenance service charts shown on the following pages. You need this information to establish your compliance with the servicing and maintenance requirements of your vehicle warranties.
Detailed warranty information is provided in your Warranty & Consumer Information manual.

Repairs and adjustments required as a result of improper maintenance or a lack of required maintenance are not covered.

We recommend you have your vehicle maintained and repaired by an authorized Kia dealer. An authorized Kia dealer meets Kia’s high service quality standards and receives technical support from Kia in order to provide you with a high level of service satisfaction.

Owner maintenance precautions

Improper or incomplete service may result in problems. This section gives instructions only for the maintenance items that are easy to perform.

As explained earlier in this section, several procedures can be done only by an authorized Kia dealer with special tools.

✻ NOTICE

Improper owner maintenance during the warranty period may affect warranty coverage. For details, read the separate Warranty & Consumer Information manual provided with the vehicle. If you're unsure about any servicing or maintenance procedure, have it done by an authorized Kia dealer.

⚠ WARNING - Maintenance work

Do not wear jewelry or loose clothing while working under the hood of your vehicle with the engine running. These can become entangled in moving parts, if you must run the engine while working under the hood, make certain that you remove all jewelry (especially rings, bracelets, watches, and necklaces) and all neckties, scarves, and similar loose clothing before getting near the engine or cooling fans.

⚠ WARNING - Touching metal parts

Do not touch metal parts (including strut bars) while the engine is operating or hot. Doing so could result in serious personal injury. Turn the engine off and wait until the metal parts cool down to perform maintenance work on the vehicle.

OWNER MAINTENANCE

The following lists are vehicle checks and inspections that should be performed by the owner or an authorized Kia dealer at the frequencies indicated to help ensure safe, dependable operation of your vehicle.

Any adverse conditions should be brought to the attention of your dealer as soon as possible.

These Owner Maintenance Checks are generally not covered by warranties and you may be charged for labor, parts and lubricants used.

Owner maintenance schedule

When you stop for fuel:

- Check the engine oil level.
- Check the coolant level in the coolant reservoir.
- Check the windshield washer fluid level.
- Look for low or under-inflated tires.

⚠ WARNING - Hot coolant

Be careful when checking your engine coolant level when the engine is hot. Scalding hot coolant and steam may blow out under pressure.

While operating your vehicle:

- Note any changes in the sound of the exhaust or any smell of exhaust fumes in the vehicle.
- Check for vibrations in the steering wheel. Notice any increased steering effort or looseness in the steering wheel, or change in its straight-ahead position.
- Notice if your vehicle constantly turns slightly or “pulls” to one side when traveling on smooth, level roads.
- When stopping, listen and check for unusual sounds, pulling to one side, increased brake pedal travel or “hard-to-push” brake pedal.
- If any slipping or changes in the operation of your transmission occurs, check the transmission fluid level.
- Check the automatic transmission P (Park) function.
- Check the parking brake.
- Check for fluid leaks under your vehicle (water dripping from the air conditioning system during or after use is normal).

At least monthly:

- Check the coolant level in the engine coolant reservoir.
- Check the operation of all exterior lights, including the stoplights, turn signals and hazard warning flashers.
- Check the inflation pressures of all tires including the spare for tires that are worn, show uneven wear, or are damaged.
- Check for loose wheel lug nuts.

At least twice a year (i.e., every Spring and Fall) :

- Check the radiator, heater and air conditioning hoses for leaks or damage.
- Check the windshield washer spray and wiper operation. Clean the wiper blades with clean cloth dampened with washer fluid.
- Check the headlight alignment.
- Check the muffler, exhaust pipes, shields and clamps.
- Check the lap/shoulder belts for wear and function.

At least once a year :

- Clean the body and door drain holes.
- Lubricate the door hinges and check the hood hinges.
- Lubricate the door and hood locks and latches.
- Lubricate the door rubber weatherstrips.
- Check the air conditioning system.
- Inspect and lubricate automatic transmission linkage and controls.
- Clean the battery and terminals.
- Check the brake fluid level.

SCHEDULED MAINTENANCE SERVICE

Follow the Normal Maintenance Schedule if the vehicle is usually operated where none of the following conditions apply. If any of the following conditions apply, follow the Maintenance Under Severe Usage Conditions.

- Repeated driving short distance of less than 8 km (5 miles) in normal temperature or less than 16 km (10 miles) in freezing temperature
- Extensive engine idling or low speed driving for long distances
- Driving on rough, dusty, muddy, unpaved, graveled or salt-spread roads
- Driving in areas using salt or other corrosive materials or in very cold weather
- Driving in heavy dust conditions
- Driving in heavy traffic areas
- Driving on uphill, downhill, or mountain roads repeatedly
- Towing a trailer or using a camper, or roof rack
- Driving as a patrol car, taxi, other commercial use of vehicle towing
- Driving over 170 km/h (106 mile/h)
- Frequently driving in stop-and-go condition

If your vehicle is operated under the above conditions, you should inspect, replace or refill more frequently than the following Normal Maintenance Schedule. After 120 months or 150,000 miles continue to follow the prescribed maintenance intervals.

Normal Maintenance Schedule - Turbo Models

The following maintenance services must be performed to ensure good emission control and performance.

Keep receipts for all vehicle emission services to protect your warranty. Where both mileage and time are shown, the frequency of service is determined by whichever occurs first.

MAINTENANCE INTERVALS / MAINTENANCE ITEM		Number of months or driving distance, whichever comes first														
	Months	12	24	36	48	60	72	84	96	108	120	132	144	156	168	180
	Miles×1,000	6	12	18	24	30	36	42	48	54	60	66	72	78	84	90
	Km×1,000	10	20	30	40	50	60	70	80	90	100	110	120	130	140	150
Drive belts *1		At first, inspect at 100,000 km (60,000 miles) or 72 months, after that, inspect every 20,000 km (12,000 miles) or 24 months														
Engine oil and engine oil filter	Theta II 2.0L T-GDI	R	R	R	R	R	R	R	R	R	R	R	R	R	R	R
Fuel additives *2		Add every 10,000 km (6,000 miles) or 12 months														
Air cleaner filter		-	I	-	R	-	I	-	R	-	I	-	R	-	I	-
Spark plugs	Theta II 2.0L T-GDI	Replace every 72,000 km (45,000 miles) or 36 months														
Valve clearance *3	Theta II 2.0L T-GDI	Inspect every 100,000 km (60,000 miles) or 72 months														

I : Inspect and if necessary, adjust, correct, clean or replace.

R : Replace or change.

*1 : The drive belt should be replaced when cracks occur or tension is reduced.

*2 : If TOP TIER Detergent Gasoline is not available, one bottle of additive is recommended. Additives are available from your authorized Kia dealer along with information on how to use them. Do not mix other additives.

*3 : Inspect for excessive valve noise and/or engine vibration and adjust if necessary. Have an authorized Kia dealer perform the operation.

Normal Maintenance Schedule - Turbo Models (CONT.)

MAINTENANCE INTERVALS / MAINTENANCE ITEM	Number of months or driving distance, whichever comes first														
	Months	**12**	**24**	**36**	**48**	**60**	**72**	**84**	**96**	**108**	**120**	**132**	**144**	**156**	**168**	**180**
	Miles×1,000	**6**	**12**	**18**	**24**	**30**	**36**	**42**	**48**	**54**	**60**	**66**	**72**	**78**	**84**	**90**
	Km×1,000	**10**	**20**	**30**	**40**	**50**	**60**	**70**	**80**	**90**	**100**	**110**	**120**	**130**	**140**	**150**
Rotate tires	Rotate every 10,000 km (6,000 miles)														
Climate control air filter	R	R	R	R	R	R	R	R	R	R	R	R	R	R	R
Vacuum hose	I	I	I	I	I	I	I	I	I	I	I	I	I	I	I
Coolant (Engine)	At first, replace at 200,000 km (120,000 miles) or 10 years : after that, replace every 50,000 km (30,000 miles) or 24 months														
Battery condition	I	I	I	I	I	I	I	I	I	I	I	I	I	I	I
Brake lines, hoses and connections (Including booster)	I	I	I	I	I	I	I	I	I	I	I	I	I	I	I
Disc brakes and pads	I	I	I	I	I	I	I	I	I	I	I	I	I	I	I
Steering gear rack, linkage and boots	I	I	I	I	I	I	I	I	I	I	I	I	I	I	I
Driveshaft and boots	I	I	I	I	I	I	I	I	I	I	I	I	I	I	I
Suspension mounting bolts	I	I	I	I	I	I	I	I	I	I	I	I	I	I	I
Air conditioner refrigerant	I	I	I	I	I	I	I	I	I	I	I	I	I	I	I
Air conditioner compressor	I	I	I	I	I	I	I	I	I	I	I	I	I	I	I
Propeller shaft	I	I	I	I	I	I	I	I	I	I	I	I	I	I	I
Exhaust pipe and muffler	I	I	I	I	I	I	I	I	I	I	I	I	I	I	I

I : Inspect and if necessary, adjust, correct, clean or replace.

R : Replace or change.

Normal Maintenance Schedule - Turbo Models (CONT.)

MAINTENANCE INTERVALS / MAINTENANCE ITEM		Number of months or driving distance, whichever comes first														
	Months	**12**	**24**	**36**	**48**	**60**	**72**	**84**	**96**	**108**	**120**	**132**	**144**	**156**	**168**	**180**
	Miles×1,000	**6**	**12**	**18**	**24**	**30**	**36**	**42**	**48**	**54**	**60**	**66**	**72**	**78**	**84**	**90**
	Km×1,000	**10**	**20**	**30**	**40**	**50**	**60**	**70**	**80**	**90**	**100**	**110**	**120**	**130**	**140**	**150**
Intercooler, in/out hose, air intake hose	Theta II 2.0L T-GDI	I	I	I	I	I	I	I	I	I	I	I	I	I	I	I
Cooling system		-	-	-	I	-	I	-	I	-	I	-	I	-	I	-
Automatic transmission fluid		No check, No service required														
Rear differential oil (AWD) *5		-	-	-	I	-	-	-	I	-	-	-	I	-	-	-
Transfer case oil (AWD) *5		-	-	-	I	-	-	-	I	-	-	-	I	-	-	-
Vapor hose, fuel filler cap, canister and fuel tank		-	I	-	I	-	I	-	I	-	I	-	I	-	I	-
Fuel tank air filter *4		-	I	-	I	-	I	-	I	-	I	-	I	-	I	-

I : Inspect and if necessary, adjust, correct, clean or replace.

R : Replace or change.

*4 : Fuel tank air filter are considered to be maintenance free but periodic inspection is recommended for this maintenance schedule depends on fuel quality.

*5 : Rear differential oil and transfer case oil should be changed anytime they have been submerged in water.

Normal Maintenance Schedule - Turbo Models (CONT.)

MAINTENANCE INTERVALS / MAINTENANCE ITEM	Number of months or driving distance, whichever comes first														
	Months	**12**	**24**	**36**	**48**	**60**	**72**	**84**	**96**	**108**	**120**	**132**	**144**	**156**	**168**	**180**
	Miles×1,000	**6**	**12**	**18**	**24**	**30**	**36**	**42**	**48**	**54**	**60**	**66**	**72**	**78**	**84**	**90**
	Km×1,000	**10**	**20**	**30**	**40**	**50**	**60**	**70**	**80**	**90**	**100**	**110**	**120**	**130**	**140**	**150**
Fuel lines, hoses and connections of each part		-	-	-	I	-	-	-	I	-	-	-	I	-	-	-
Parking brake		-	I	-	I	-	I	-	I	-	I	-	I	-	I	-
Brake fluid		I	I	I	R	I	I	I	R	I	I	I	R	I	I	I
Cooling system hoses and connections		Inspect every 12,000 km (7,500 miles) or 6 months														
Clutch (if equipped) and brake pedal free play		Inspect every 12,000 km (7,500 miles) or 6 months														
All latch, hinges and locks		Inspect every 24,000 km (15,000 miles) or 12 months														

I : Inspect and if necessary, adjust, correct, clean or replace.

R : Replace or change.

Maintenance Under Severe Usage Conditions - Turbo Models

The following items must be serviced more frequently on cars normally used under severe driving conditions. Refer to the chart below for the appropriate maintenance intervals.

R : Replace I : Inspect and, after inspection, clean, adjust, repair or replace if necessary

MAINTENANCE ITEM		MAINTENANCE OPERATION	MAINTENANCE INTERVALS	DRIVING CONDITION
Engine oil and engine oil filter	Theta II 2.0L T-GDI	R	Every 5,000 km (3,000 miles) or 6 months	A, B, C, D, E, F, G, H, I, J, K
Air cleaner filter		I	More frequently	C, E
Spark plugs		R	More frequently	A, B, F, G, H, I, K
Automatic transmission fluid		R	Every 100,000 km (60,000 miles)	A, C, E, F, G, H, I, J
Front brake disc/pads, calipers		I	More frequently	C, D, E, G, H
Rear brake disc/pads		I	More frequently	C, D, E, G, H
Parking brake		I	More frequently	C, D, G, H
Steering gear box, linkage & boots/ Lower arm ball joint, upper arm ball joint		I	More frequently	C, D, E, F, G

MAINTENANCE ITEM	MAINTENANCE OPERATION	MAINTENANCE INTERVALS	DRIVING CONDITION
Drive shafts and boots	I	More frequently	C, D, E, F, G, H, I, J
Rear differential oil (AWD)	R	Every 120,000 km (72,000 miles)	C, E, G, H, I, J
Transfer case oil (AWD)	R	Every 120,000 km (72,000 miles)	C, E, G, H, I, J
Climate control air filter (for evaporator and blower unit)	R	More frequently	C, E, G
Propeller shaft	I	More frequently	C, E

Severe driving conditions

A - Repeatedly driving short distance of less than 8 km (5 miles) in normal temperature or less than 16 km (10 miles) in freezing temperature

B - Extensive engine idling or low speed driving for long distances

C - Driving on rough, dusty, muddy, unpaved, graveled or salt-spread roads

D - Driving in areas using salt or other corrosive materials or in very cold weather

E - Driving in heavy dust conditions

F - Driving in heavy traffic areas

G - Driving on uphill, downhill, or mountain road repeatedly

H - Towing a Trailer, or using a camper, or roof rack

I - Driving as a patrol car, taxi, other commercial use or vehicle towing

J - Driving over 170 km/h (106 mph)

K - Frequently driving in stop-and-go conditions

Normal Maintenance Schedule - Non Turbo Models

The following maintenance services must be performed to ensure good emission control and performance.

Keep receipts for all vehicle emission services to protect your warranty. Where both mileage and time are shown, the frequency of service is determined by whichever occurs first.

MAINTENANCE INTERVALS / MAINTENANCE ITEM	Number of months or driving distance, whichever comes first															
	Months	**12**	**24**	**36**	**48**	**60**	**72**	**84**	**96**	**108**	**120**	**132**	**144**	**156**	**168**	**180**
	Miles×1,000	**7.5**	**15**	**22.5**	**30**	**37.5**	**45**	**52.5**	**60**	**67.5**	**75**	**82.5**	**90**	**97.5**	**105**	**112.5**
	Km×1,000	**12**	**24**	**36**	**48**	**60**	**72**	**84**	**96**	**108**	**120**	**132**	**144**	**156**	**168**	**180**
Drive belts *1		At first, inspect at 96,000 km (60,000 miles) or 72 months, after that, inspect every 24,000 km (15,000 miles) or 24 months														
Engine oil and engine oil filter	Theta II 2.4L GDI	R	R	R	R	R	R	R	R	R	R	R	R	R	R	R
Fuel additives *2		Add every 12,000 km (7,500 miles) or 12 months														
Air cleaner filter		I	I	I	R	I	I	I	R	I	I	I	R	I	I	I
Spark plugs	Theta II 2.4L GDI	Replace every 168,000 km (105,500 miles) or 84 months														
Valve clearance *3	Theta II 2.4L GDI	Inspect every 96,000 km (60,000 miles) or 72 months														

I : Inspect and if necessary, adjust, correct, clean or replace.

R : Replace or change.

*1 : The drive belt should be replaced when cracks occur or tension is reduced.

*2 : If TOP TIER Detergent Gasoline is not available, one bottle of additive is recommended. Additives are available from your authorized Kia dealer along with information on how to use them. Do not mix other additives.

*3 : Inspect for excessive valve noise and/or engine vibration and adjust if necessary. Have an authorized Kia dealer perform the operation.

Normal Maintenance Schedule - Non Turbo Models(CONT.)

MAINTENANCE INTERVALS / MAINTENANCE ITEM	Number of months or driving distance, whichever comes first														
	Months	12	24	36	48	60	72	84	96	108	120	132	144	156	168	180
	Miles×1,000	7.5	15	22.5	30	37.5	45	52.5	60	67.5	75	82.5	90	97.5	105	112.5
	Km×1,000	12	24	36	48	60	72	84	96	108	120	132	144	156	168	180
Rotate tires	Rotate every 12,000 km (7,500 miles)															
Climate control air filter	R	R	R	R	R	R	R	R	R	R	R	R	R	R	R
Vacuum hose	I	I	I	I	I	I	I	I	I	I	I	I	I	I	I
Coolant (Engine)	At first, replace at 192,000 km (120,000 miles) or 10 years, after that, replace every 48,000 km (30,000 miles) or 24 months														
Battery condition	I	I	I	I	I	I	I	I	I	I	I	I	I	I	I
Brake lines, hoses and connections (Including booster)	I	I	I	I	I	I	I	I	I	I	I	I	I	I	I
Brake discs and pads	I	I	I	I	I	I	I	I	I	I	I	I	I	I	I
Steering gear rack, linkage and boots	I	I	I	I	I	I	I	I	I	I	I	I	I	I	I
Driveshaft and boots	I	I	I	I	I	I	I	I	I	I	I	I	I	I	I
Suspension ball joints	I	I	I	I	I	I	I	I	I	I	I	I	I	I	I
Air conditioner compressor/refrigerant	I	I	I	I	I	I	I	I	I	I	I	I	I	I	I
Propeller shaft (AWD)	I	I	I	I	I	I	I	I	I	I	I	I	I	I	I
Exhaust system	I	I	I	I	I	I	I	I	I	I	I	I	I	I	I

I : Inspect and if necessary, adjust, correct, clean or replace.

R : Replace or change.

Normal Maintenance Schedule - Non Turbo Models (CONT.)

MAINTENANCE INTERVALS / MAINTENANCE ITEM	Number of months or driving distance, whichever comes first														
	Months	**12**	**24**	**36**	**48**	**60**	**72**	**84**	**96**	**108**	**120**	**132**	**144**	**156**	**168**	**180**
	Miles×1,000	**7.5**	**15**	**22.5**	**30**	**37.5**	**45**	**52.5**	**60**	**67.5**	**75**	**82.5**	**90**	**97.5**	**105**	**112.5**
	Km×1,000	**12**	**24**	**36**	**48**	**60**	**72**	**84**	**96**	**108**	**120**	**132**	**144**	**156**	**168**	**180**
Cooling system		-	-	-	I	-	I	-	I	-	I	-	I	-	I	-
Automatic transmission fluid		No check, No service required														
Rear differential oil (AWD) *5		-	-	-	I	-	-	-	I	-	-	-	I	-	-	-
Transfer case oil (AWD) *5		-	-	-	I	-	-	-	I	-	-	-	I	-	-	-
Vapor hose, canisrer and fuel filler cap		-	-	-	I	-	-	-	I	-	-	-	I	-	-	-
Fuel tank air filter *4		-	-	-	I	-	-	-	I	-	-	-	I	-	-	-
Fuel lines, hoses and connections of each part		-	-	-	I	-	-	-	I	-	-	-	I	-	-	-
Parking brake		-	I	-	I	-	I	-	I	-	I	-	I	-	I	-
Brake fluid		I	I	I	R	I	I	I	R	I	I	I	R	I	I	I

I : Inspect and if necessary, adjust, correct, clean or replace.

R : Replace or change.

*4 : Fuel tank air filter are considered to be maintenance free but periodic inspection is recommended for this maintenance schedule depends on fuel quality.

*5 : Rear differential oil and transfer case oil should be changed anytime they have been submerged in water.

Maintenance Under Severe Usage Conditions - Non Turbo Models

The following items must be serviced more frequently on cars normally used under severe driving conditions. Refer to the chart below for the appropriate maintenance intervals.

R : Replace I : Inspect and, after inspection, clean, adjust, repair or replace if necessary

MAINTENANCE ITEM		MAINTENANCE OPERATION	MAINTENANCE INTERVALS	DRIVING CONDITION
Engine oil and engine oil filter	Theta II 2.4L GDI	R	Every 6,000 km (3,750 miles) or 6 months	A, B, C, D, E, F, G, H, I, J, K
Air cleaner filter		R	More frequently	C, E
Spark plugs		R	More frequently	A, B, F, G, H, I, K
Automatic transmission fluid		R	Every 96,000 km (60,000 miles)	A, C, E, F, G, H, I, J
Brake discs and pads, calipers and rotors		I	More frequently	C, D, E, G, H
Parking brake (Foot Type)		I	More frequently	C, D, G, H
Steering gear rack, linkage and boots		I	More frequently	C, D, E, F, G
Suspension ball joints		I	More frequently	C, D, E, F, G

MAINTENANCE ITEM	MAINTENANCE OPERATION	MAINTENANCE INTERVALS	DRIVING CONDITION
Drive shafts and boots	I	More frequently	C, D, E, F, G, H, I, J
Rear differential oil (AWD)	R	Every 120,000 km (75,000 miles)	C, E, G, H, I, J
Transfer case oil (AWD)	R	Every 120,000 km (75,000 miles)	C, E, G, H, I, J
Climate control air filter	R	More frequently	C, E, G
Propeller shaft	I	More frequently	C, D, E, F, G, H, I, J

Severe driving conditions

A - Repeatedly driving short distance of less than 8 km (5 miles) in normal temperature or less than 16 km (10 miles) in freezing temperature

B - Extensive engine idling or low speed driving for long distances

C - Driving on rough, dusty, muddy, unpaved, graveled or salt-spread roads

D - Driving in areas using salt or other corrosive materials or in very cold weather

E - Driving in heavy dust condition

F - Driving in heavy traffic area

G - Driving on uphill, downhill, or mountain road repeatedly

H - Towing a Trailer, or using a camper, or roof rack

I - Driving as a patrol car, taxi, other commercial use or vehicle towing

J - Driving over 170 km/h (106 mph)

K - Frequently driving in stop-and-go conditions

EXPLANATION OF SCHEDULED MAINTENANCE ITEMS

Engine oil and filter

The engine oil and filter should be changed at the intervals specified in the maintenance schedule. If the vehicle is being driven in severe conditions, more frequent oil and filter changes are required.

Drive belts

Inspect all drive belts for evidence of cuts, cracks, excessive wear or oil saturation and replace if necessary. Drive belts should be checked periodically for proper tension and adjusted as necessary.

Fuel filter (for gasoline)

Kia gasoline vehicle is equipped a lifetime fuel filter that integrated with the fuel tank. Regular maintenance or replacement is not needed but depends on fuel quality. If there are some important safety matters like fuel flow restriction, surging, loss of power, hard starting problem etc, fuel filter inspection or replace is needed.

The fuel filter should be inspected or replaced by an authorized Kia dealer.

Fuel lines, fuel hoses and connections

Check the fuel lines, fuel hoses and connections for leakage and damage. Have an authorized Kia dealer replace any damaged or leaking parts immediately.

Vapor hose and fuel filler cap

The vapor hose and fuel filler cap should be inspected at those intervals specified in the maintenance schedule. Make sure that a new vapor hose or fuel filler cap is correctly replaced.

Vacuum crankcase ventilation hoses

Inspect the surface of hoses for evidence of heat and/or mechanical damage. Hard and brittle rubber, cracking, tears, cuts, abrasions, and excessive swelling indicate deterioration. Particular attention should be paid to examine those hose surfaces nearest to high heat sources, such as the exhaust manifold.

Inspect the hose routing to assure that the hoses do not come in contact with any heat source, sharp edges or moving component which might cause heat damage or mechanical wear. Inspect all hose connections, such as clamps and couplings, to make sure they are secure, and that no leaks are present. Hoses should be replaced immediately if there is any evidence of deterioration or damage.

Air cleaner filter

A Genuine Kia air cleaner filter is recommended when the filter is replaced.

Spark plugs

Make sure to install new spark plugs of the correct heat range.

Valve clearance (if equipped)

Inspect excessive valve noise and/or engine vibration and adjust if necessary. An authorized Kia dealer should perform the operation.

Cooling system

Check the cooling system components, such as the radiator, coolant reservoir, hoses and connections for leakage and damage. Replace any damaged parts.

Coolant

The coolant should be changed at the intervals specified in the maintenance schedule.

Automatic transmission fluid

Automatic transmission fluid should not be checked under normal usage conditions.

But in severe conditions, the fluid should be changed at an authorized Kia dealer in accordance to the scheduled maintenance at the beginning of this chapter.

✻ NOTICE

Automatic transmission fluid color is reddish.
As the vehicle is driven, the automatic transmission fluid will begin to look darker.
It is normal condition and you should not judge the need to replace the fluid based upon the changed color.

⚠ CAUTION

Use only specified automatic transmission fluid. The use of a non-specified fluid could result in a transmission malfunction and failure. (Refer to "Recommended lubricants and capacities" in chapter 8.)

Brake hoses and lines

Visually check for proper installation, chafing, cracks, deterioration and any leakage. Replace any deteriorated or damaged parts immediately.

Brake fluid

Check the brake fluid level in the brake fluid reservoir. The level should be between “MIN” and “MAX” marks on the side of the reservoir. Use only hydraulic brake fluid conforming to DOT 3 or DOT 4 specification.

Parking brake

Inspect the parking brake system including the parking brake pedal and cables.

Brake discs, pads, calipers and rotors

Check the pads for excessive wear, discs for run out and wear, and calipers for fluid leakage.

Exhaust pipe and muffler

Visually inspect the exhaust pipes, muffler and hangers for cracks, deterioration, or damage. Start the engine and listen carefully for any exhaust gas leakage. Tighten connections or replace parts as necessary.

Suspension mounting bolts

Check the suspension connections for looseness or damage. Retighten to the specified torque.

Steering gear box, linkage & boots/lower arm ball joint

With the vehicle stopped and engine off, check for excessive free-play in the steering wheel.

Check the linkage for bends or damage. Check the dust boots and ball joints for deterioration, cracks, or damage. Replace any damaged parts.

Drive shafts and boots

Check the drive shafts, boots and clamps for cracks, deterioration, or damage. Replace any damaged parts and, if necessary, repack the grease.

Air conditioning refrigerant

Check the air conditioning lines and connections for leakage and damage.

CHECKING FLUID LEVELS

When checking engine oil, engine coolant, brake fluid, and washer fluid, always be sure to clean the area around any filler plug, drain plug, or dipstick before checking or draining any lubricant or fluid. This is especially important in dusty or sandy areas and when the vehicle is used on unpaved roads. Cleaning the plug and dipstick areas will prevent dirt and grit from entering the engine and other mechanisms that could be damaged.

ENGINE OIL

Checking the engine oil level

■ Theta II 2.4L GDI

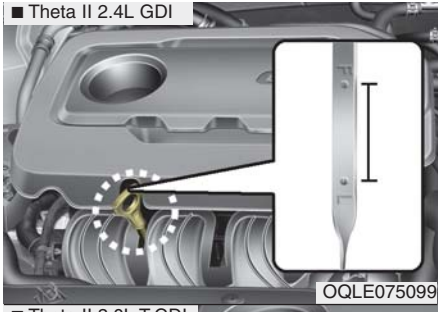

OQLE075099

■ Theta II 2.0L T-GDI

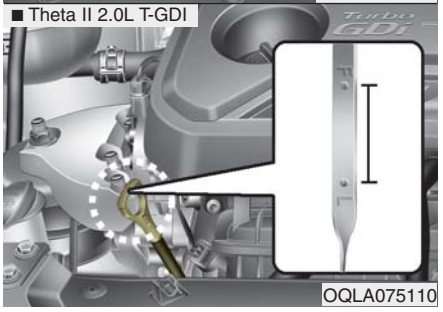

OQLA075110

1. Be sure the vehicle is on level ground.
2. Start the engine and allow it to reach normal operating temperature.
3. Turn the engine off and wait for a few minutes (about 5 minutes) for the oil to return to the oil pan.
4. Pull the dipstick out, wipe it clean, and reinsert it fully.

⚠ WARNING - Radiator hose

Be very careful not to touch the radiator hose when checking or adding the engine oil as it may be hot enough to burn you.

5. Pull the dipstick out again and check the level. The level should be between F and L.

⚠ CAUTION - Replacing engine oil

Do not overfill the engine oil. It may damage the engine.

■ Theta II 2.4L GDI

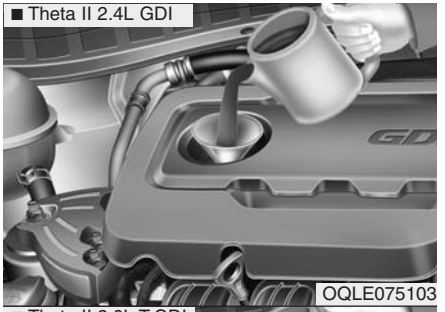

OQLE075103

■ Theta II 2.0L T-GDI

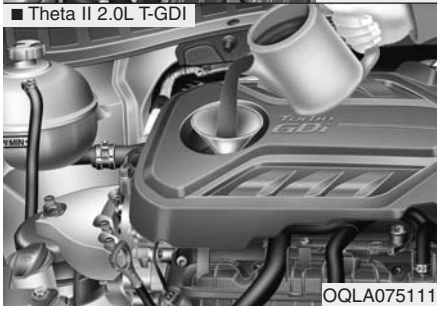

OQLA075111

If it is near or at L, add enough oil to bring the level to F. **Do not overfill.**

Use a funnel to help prevent oil from being spilled on engine components.

Use only the specified engine oil. (Refer to "Recommended lubricants and capacities" in chapter 8.)

Changing the engine oil and filter

Have engine oil and filter changed by an authorized Kia dealer according to the Maintenance Schedule at the beginning of this chapter.

⚠ WARNING - Used engine oil

Used engine oil may cause irritation or cancer of the skin if left in contact with the skin for prolonged periods of time. Always protect your skin by washing your hands thoroughly with soap and warm water as soon as possible after handling used oil.

ENGINE COOLANT

The high-pressure cooling system has a reservoir filled with year round antifreeze coolant. The reservoir is filled at the factory.

Check the antifreeze protection and coolant level at least once a year: at the beginning of the winter season, and before traveling to a colder climate.

Checking the coolant level

⚠ WARNING

Removing radiator cap

Never attempt to remove the radiator cap while the engine is operating or hot. Doing so might lead to cooling system and engine damage and could result in serious bodily injury from escaping hot coolant or steam.

- Turn the engine off and wait until it cools down. Use extreme care when removing the radiator cap. Wrap a thick towel around it, and turn it counterclockwise slowly to the first stop. Step back while the pressure is released from the cooling system.

  When you are sure all the pressure has been released, press down on the cap, using a thick towel, and continue turning counterclockwise to remove it.
- Even if the engine is not operating, do not remove the radiator cap or the drain plug while the engine and radiator are hot. Hot coolant and steam may still blow out under pressure, causing serious injury.

⚠ WARNING - Cooling fan

Use caution when working near the blade of the cooling fan. The electric motor (cooling fan) is controlled by engine coolant temperature, refrigerant pressure and vehicle speed. it may sometimes operate even when the engine is not running.

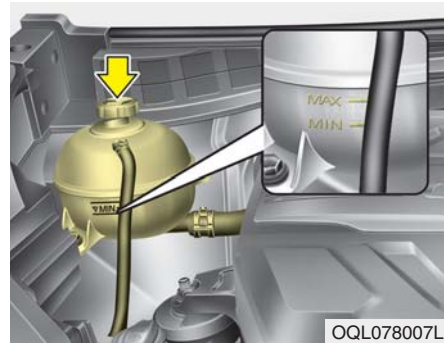

OQL078007L

Check the condition and connections of all cooling system hoses and heater hoses. Replace any swollen or deteriorated hoses.

The coolant level should be filled between MAX and MIN marks on the side of the coolant reservoir when the engine is cool.

OQLE075008

If the coolant level is low, add enough specified coolant to provide protection against freezing and corrosion. Bring the level to MAX, but do not overfill. If frequent additions are required, see an authorized Kia dealer for a cooling system inspection.

✻ NOTICE

Make sure the coolant cap is properly closed after refill of coolant. Otherwise the engine could be overheated while driving.

■ Engine room front view

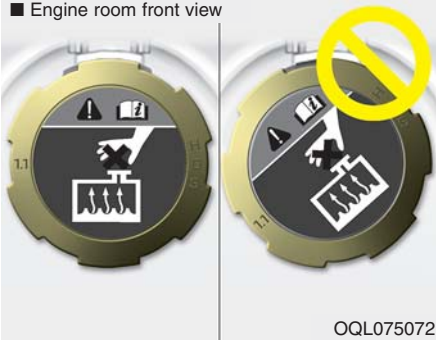

1. **Check if the radiator cap label is straight In front.**

■ Engine room rear view

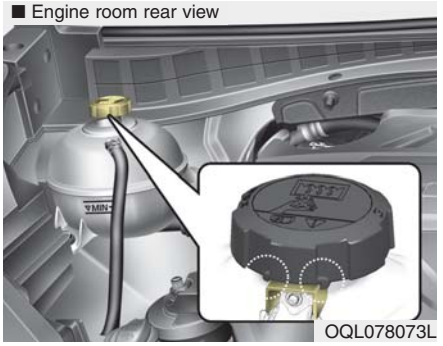

2. **Make sure that the tiny protrusions inside the coolant cap are securely interlocked.**

Recommended engine coolant

- When adding coolant, use only deionized water or soft water for your vehicle and never mix hard water in the coolant filled at the factory. An improper coolant mixture can result in serious malfunction or engine damage.
- The engine in your vehicle has aluminum engine parts and must be protected by an ethylene-glycol with phosphate based coolant to prevent corrosion and freezing.
- DO NOT USE alcohol or methanol coolant or mix them with the specified coolant.
- Do not use a solution that contains more than 60% antifreeze or less than 35% antifreeze. This would reduce the effectiveness of the solution.

For mixture percentage, refer to the following table.

Ambient Temperature	Mixture Percentage (volume)	
	Antifreeze	Water
-15°C (5°F)	35	65
-25°C (-13°F)	40	60
-35°C (-31°F)	50	50
-45°C (-49°F)	60	40

Changing the coolant

Have the coolant changed by an authorized Kia dealer according to the Maintenance Schedule at the beginning of this chapter.

Put a thick cloth around the radiator cap before refilling the coolant in order to prevent the coolant from overflowing into engine parts such as the alternator.

⚠ CAUTION

Put a thick cloth or fabric around the radiator cap before refilling the coolant in order to prevent the coolant from overflowing into engine parts such as the generator.

BRAKE FLUID

Checking the brake fluid level

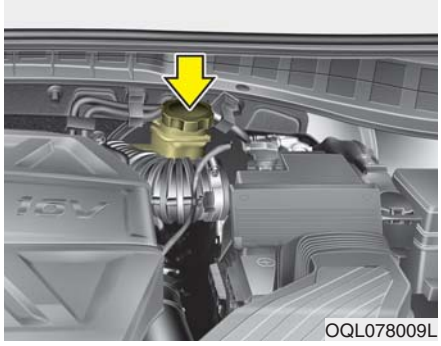

Check the fluid level in the reservoir periodically. The fluid level should be between MAX (Maximum) and MIN (Minimum) marks on the side of the reservoir.

Before removing the reservoir cap and adding brake fluid, clean the area around the reservoir cap thoroughly to prevent brake fluid contamination.

⚠ CAUTION - Proper fluid

Only use brake fluid in the brake system. Small amounts of improper fluids (such as engine oil) can cause damage to the brake system.

If the level is low, add fluid to the MAX (Maximum) level. The level will fall with accumulated mileage. This is a normal condition associated with the wear of brake linings. If the fluid level is excessively low, have the brake system checked by an authorized Kia dealer.

Use only the specified brake fluid. (Refer to "Recommended lubricants and capacities" in chapter 8.)

Never mix different types of fluid.

In the event the brake system requires frequent additions of fluid, the vehicle should be inspected by an authorized Kia dealer.

When changing and adding brake fluid, handle it carefully. Do not let it come in contact with your eyes. If brake fluid should come in contact with your eyes, immediately flush them with a large quantity of fresh tap water. Have your eyes examined by a doctor as soon as possible.

⚠ CAUTION - Brake fluid

Do not allow brake fluid to contact the vehicle's body paint, as paint damage will result.

Brake fluid, which has been exposed to open air for an extended time should never be used as its quality cannot be guaranteed. It should be disposed of properly.

WASHER FLUID

Checking the washer fluid level

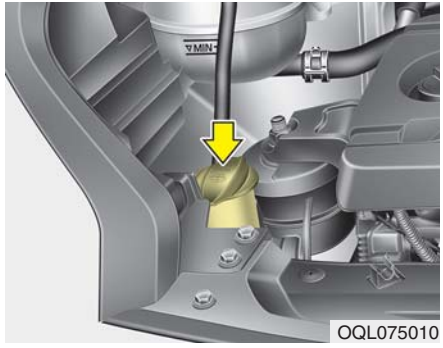

OQL075010

The reservoir is translucent so that you can check the level with a quick visual inspection.

Check the fluid level in the washer fluid reservoir and add fluid if necessary. Plain water may be used if washer fluid is not available. However, use washer solvent with antifreeze characteristics in cold climates to prevent freezing.

⚠ WARNING - Flammable fluid

Do not allow the washer fluid to come in contact with open flames or sparks. The windshield washer fluid reservoir is flammable under certain circumstances. This can result in a fire.

⚠ WARNING - Coolant

- **Do not use radiator coolant or antifreeze in the washer fluid reservoir.**
- **Radiator coolant can severely obscure visibility when sprayed on the windshield and may cause loss of vehicle control.**

⚠ WARNING - Windshield fluid

Do not drink the windshield washer fluid. The windshield washer fluid is poisonous to humans and animals.

PARKING BRAKE

Checking the parking brake

OQL075012

Check whether the stroke is within specification when the parking brake pedal is depressed with 20 kg (44 lbs, 196 N) of force. Also, the parking brake alone should securely hold the vehicle on a fairly steep grade. If the stroke is more or less than specified, have the parking brake adjusted by an authorized Kia dealer.

Stroke : 4 ~ 5 notch

AIR CLEANER

Filter replacement

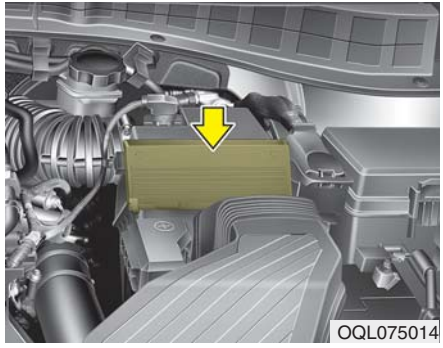

It must be replaced when necessary according to the Maintenance Schedule, and should not be washed.

You can clean the filter when inspecting the air cleaner compartment.

Clean the filter by using compressed air.

1. Pull out the air cleaner cover.

2. Unlock by turning the locking lever downward.
3. Pull the air cleaner filter to replace.

4. Pull up the lever (1) to the LOCK position.
5. Rise up the cover (2) until the hooks on the cover are securely fastened into the latches (3).
6. Check if the cover is firmly installed.

Replace the filter according to the Maintenance Schedule.

If the vehicle is operated in extremely dusty or sandy areas, replace the element more often than the usual recommended intervals. (Refer to "Maintenance under severe usage conditions" in this chapter.)

⚠ CAUTION - Air filter maintenance

- ***Do not drive with the air cleaner removed; this will result in excessive engine wear.***
- ***When removing the air cleaner filter, be careful that dust or dirt does not enter the air intake, or damage may result.***
- ***Use a Kia genuine part. Use of a non-genuine part could damage the air flow sensor.***

CLIMATE CONTROL AIR FILTER

Filter inspection

The climate control air filter should be replaced according to the Maintenance Schedule. If the vehicle is operated in severely air-polluted cities or on dusty rough roads for a long period, it should be inspected more frequently and replaced earlier. When you replace the climate control air filter, replace it performing the following procedure, and be careful to avoid damaging other components.

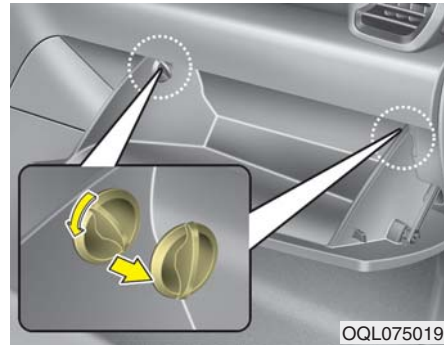

1. Open the glove box and remove the stoppers on both sides.

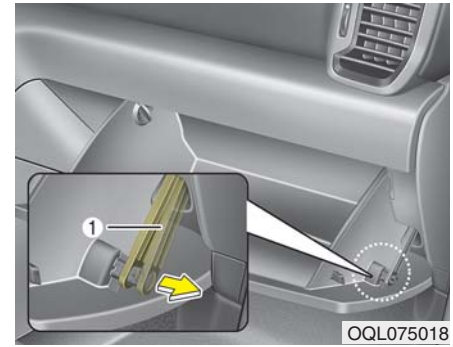

2. With the glove box open, pull the support strap (1).

3. Remove the climate control air filter cover while pressing the lock on the left side of the cover.

4. Replace the climate control air filter.
5. Reassemble in the reverse order of disassembly.

When replacing the climate control air filter install it properly. Otherwise, the system may produce noise and the effectiveness of the filter may be reduced.

WIPER BLADES

Blade inspection

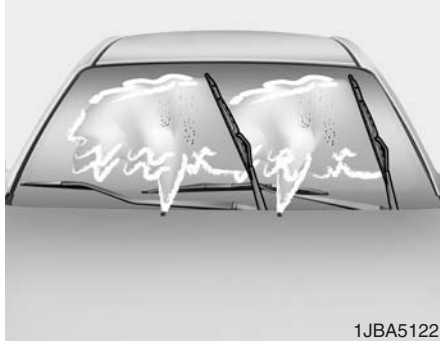

Commercial hot waxes applied by automatic car washes have been known to make the windshield difficult to clean.

Contamination of either the windshield or the wiper blades with foreign matter can reduce the effectiveness of the windshield wipers. Common sources of contamination are insects, tree sap, and hot wax treatments used by some commercial car washes. If the blades are not wiping properly, clean both the window and the blades with a good cleaner or mild detergent, and rinse thoroughly with clean water.

⚠ **CAUTION - Wiper blades**

To prevent damage to the wiper blades, do not use gasoline, kerosene, paint thinner, or other solvents on or near them.

Blade replacement

When the wipers no longer clean adequately, the blades may be worn or cracked, and require replacement.

To prevent damage to the wiper arms or other components, do not attempt to move the wipers manually.

The use of a non-specified wiper blade could result in wiper malfunction and failure.

Front windshield wiper blade

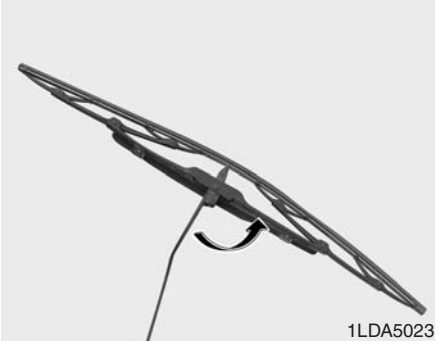

1. Raise the wiper arm and turn the wiper blade assembly to expose the plastic locking clip.

⚠ CAUTION - Wiper arms

Do not allow the wiper arm to fall against the windshield, since it may chip or crack the windshield.

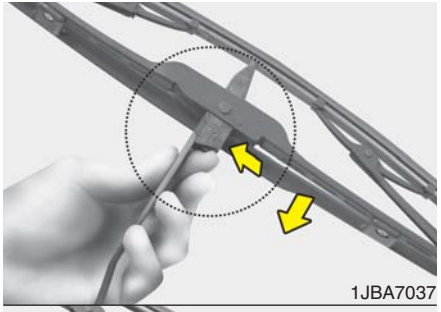

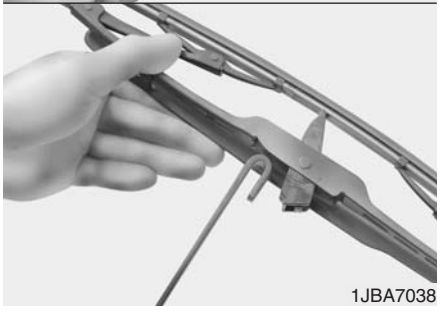

2. Compress the clip and slide the blade assembly downward.
3. Lift it off the arm.
4. Install the blade assembly in the reverse order of removal.

Rear window wiper blade

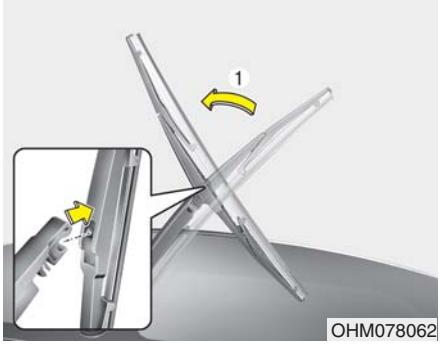

1. Raise the wiper arm and pull out the wiper blade assembly.

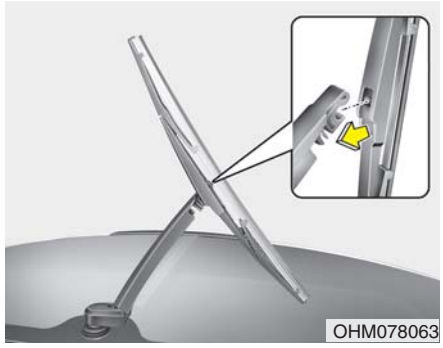

2. Install the new blade assembly by inserting the center part into the slot in the wiper arm until it clicks into place.
3. Make sure the blade assembly is installed firmly by trying to pull it slightly.

To prevent damage to the wiper arms or other components, have an authorized Kia dealer replace the wiper blade.

BATTERY

For best battery service

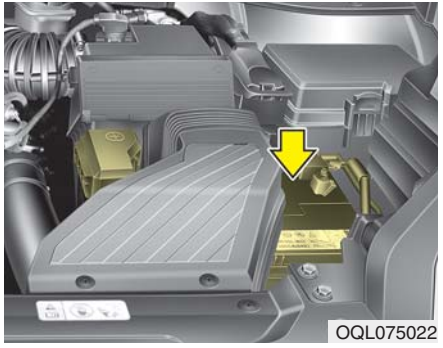

- Keep the battery securely mounted.
- Keep the battery top clean and dry.
- Keep the terminals and connections clean, tight, and coated with petroleum jelly or terminal grease.
- Rinse any spilled electrolyte from the battery immediately with a solution of water and baking soda.
- If the vehicle is not going to be used for an extended time, disconnect the battery cables.

⚠ WARNING - Risk of explosion

Keep lit cigarettes and all other flames or sparks away from the battery.

The battery contains hydrogen -- a highly combustible gas which will explode if it comes in contact with a flame or spark.

Keep batteries out of the reach of children because batteries contain highly corrosive SULFURIC ACID and electrolytes. Do not allow battery acid to contact your skin, eyes, clothing or paint finish.

Wear eye protection when charging or working near a battery. Always provide ventilation when working in an enclosed space.

Always read the following instructions carefully when handling a battery.

If any electrolyte gets into your eyes, flush your eyes with clean water for at least 15 minutes and get immediate medical attention.

If electrolyte gets on your skin, thoroughly wash the contacted area. If you feel pain or burning sensation, get medical attention immediately.

An inappropriately disposed battery can be harmful to the environment and human health. Dispose the battery according to your local law(s) or regulation.

The battery contains lead. Do not dispose of it after use. Please return the battery to an authorized Kia dealer to be recycled.

Never attempt to recharge the battery when the battery cables are connected.

⚠ WARNING - Risk of electrocution

Never touch the electrical ignition system while the vehicle is running. This system works with high voltage which can shock you.

⚠ WARNING - Recharging Battery

Never attempt to recharge the battery when the battery cables are connected.

⚠ WARNING - Battery lead compound

Battery posts, terminals, and related accessories contain lead and lead compounds. Wash hands after handling.

✻ NOTICE

If you connect unauthorized electronic devices to the battery, the battery may be discharged. Never use unauthorized devices.

Recharging the battery

Your vehicle has a maintenance-free, calcium-based battery.

- If the battery becomes discharged in a short time (because, for example, the headlamps or interior lamps were left on while the vehicle was not in use), recharge it by slow charging (trickle) for 10 hours.
- If the battery gradually discharges because of high electric load while the vehicle is being used, recharge it at 20-30A for two hours.

When recharging the battery, observe the following precautions:

- The battery must be removed from the vehicle and placed in an area with good ventilation.
- Do not allow cigarettes, sparks, or flame near the battery.
- Watch the battery during charging, and stop or reduce the charging rate if the battery cells begin gassing (boiling) violently or if the temperature of the electrolyte of any cell exceeds 49°C (120°F).
- Wear eye protection when checking the battery during charging.
- Disconnect the battery charger in the following order.

1. Turn off the battery charger main switch.
2. Unhook the negative clamp from the negative battery terminal.
3. Unhook the positive clamp from the positive battery terminal.

- Before performing maintenance or recharging the battery, turn off all accessories and stop the engine.
- The negative battery cable must be removed first and installed last when the battery is disconnected.

Reset items

Items should be reset after the battery has been discharged or the battery has been disconnected.

- Auto up/down window
- Sunroof
- Trip computer
- Climate control system
- Driver position memory system

TIRES AND WHEELS

Tire care

For proper maintenance, safety, and maximum fuel economy, you must always maintain recommended tire inflation pressures and stay within the load limits and weight distribution recommended for your vehicle.

Recommended cold tire inflation pressures

All tire pressures (including the spare) should be checked when the tires are cold. “Cold Tires” means the vehicle has not been driven for at least three hours or driven less than 1.6 km (1 mile).

Recommended pressures must be maintained for the best ride, top vehicle handling, and minimum tire wear.

For recommended inflation pressure refer to “Tire and wheels” in chapter 8.

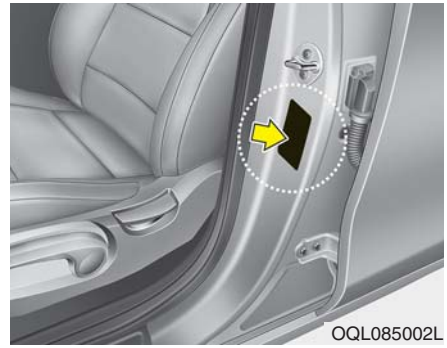

All specifications (sizes and pressures) can be found on a label attached to the driver’s side center pillar.

⚠ WARNING - Tire underinflation

Inflate your tires consistent with the instructions provided in this manual. Severe underinflation (70 kPa (10 psi) or more) can lead to severe heat build-up, causing blowouts, tread separation and other tire failures that can result in the loss of vehicle control. This risk is much higher on hot days and when driving for long periods at high speeds.

- Underinflation also results in excessive wear, poor handling and reduced fuel economy. Wheel deformation also is possible. Keep your tire pressures at the proper levels. If a tire frequently needs refilling, have it checked by an authorized Kia dealer.
- Overinflation produces a harsh ride, excessive wear at the center of the tire tread, and a greater possibility of damage from road hazards.
- Warm tires normally exceed recommended cold tire pressures by 28 to 41 kPa (4 to 6 psi). Do not release air from warm tires to adjust the pressure or the tires will be underinflated.
- Be sure to reinstall the tire inflation valve caps. Without the valve cap, dirt or moisture could get into the valve core and cause air leakage. If a valve cap is missing, install a new one as soon as possible.

Tire pressure

Always observe the following:

- Check tire pressure when the tires are cold. (After the vehicle has been parked for at least three hours or hasn't been driven more than 1.6 km (1 mile) since startup.)
- Check the pressure of your spare tire each time you check the pressure of other tires.
- Never overload your vehicle. Be careful not to overload a vehicle luggage rack if your vehicle is equipped with one.

⚠ WARNING - Tire Inflation

Overinflation or underinflation can reduce tire life, adversely affect vehicle handling, and lead to sudden tire failure. This could result in loss of vehicle control and potential injury.

Checking tire inflation pressure

Check your tires once a month or more.

Also, check the tire pressure of the spare tire.

How to check

Use a good quality gauge to check tire pressure. You can not tell if your tires are properly inflated simply by looking at them. Radial tires may look properly inflated even when they're underinflated.

Check the tire's inflation pressure when the tires are cold. - "Cold" means your vehicle has been sitting for at least three hours or driven no more than 1.6 km (1 mile).

Remove the valve cap from the tire valve stem. Press the tire gauge firmly onto the valve to get a pressure measurement. If the cold tire inflation pressure matches the recommended pressure on the tire and loading information label, no further adjustment is necessary. If the pressure is low, add air until you reach the recommended amount.

If you overfill the tire, release air by pushing on the metal stem in the center of the tire valve. Recheck the tire pressure with the tire gauge. Be sure to put the valve caps back on the valve stems. They help prevent leaks by keeping out dirt and moisture.

- Inspect your tires frequently for proper inflation as well as wear and damage. Always use a tire pressure gauge.
- Tires with too much or too little pressure wear unevenly causing poor handling, loss of vehicle control, and sudden tire failure leading to accidents, injuries, and even death. The recommended cold tire pressure for your vehicle can be found in this manual and on the tire label located on the driver's side center pillar.
- Remember to check the pressure of your spare tire. Kia recommends that you check the spare every time you check the pressure of the other tires on your vehicle.

Tire rotation

To equalize tread wear, it is recommended that the tires be rotated every 10,000 km (6,500 miles) or sooner if irregular wear develops.

During rotation, check the tires for correct balance.

When rotating tires, check for uneven wear and damage. Abnormal wear is usually caused by incorrect tire pressure, improper wheel alignment, out-of-balance wheels, severe braking or severe cornering. Look for bumps or bulges in the tread or side of tire. Replace the tire if you find either of these conditions. Replace the tire if fabric or cord is visible. After rotation, be sure to bring the front and rear tire pressures to specification and check lug nut tightness.

Refer to “Tire and wheels” in chapter 8.

Without a spare tire

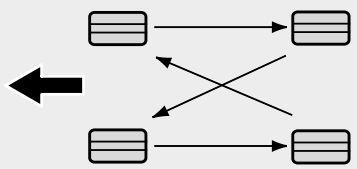

S2BLA790A

Directional tires (if equipped)

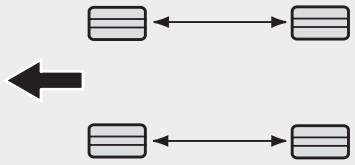

CBGQ0707A

Disc brake pads should be inspected for wear whenever tires are rotated.

Rotate radial tires that have an asymmetric tread pattern only from front to rear and not from right to left.

⚠ WARNING - Mixing tires

- **Do not use the compact spare tire (if equipped) for tire rotation.**
- **Do not mix bias ply and radial ply tires under any circumstances. This may cause unusual handling characteristics.**

Wheel alignment and tire balance

The wheels on your vehicle were aligned and balanced carefully at the factory to give you the longest tire life and best overall performance.

In most cases, you will not need to have your wheels aligned again. However, if you notice unusual tire wear or your vehicle pulling one way or the other, the alignment may need to be reset.

If you notice your vehicle vibrating when driving on a smooth road, your wheels may need to be rebalanced.

⚠ CAUTION - Wheel weight

Improper wheel weights can damage your vehicle's aluminum wheels. Use only approved wheel weights.

Tire replacement

If the tire is worn evenly, a tread wear Indicator (A) will appear as a solid band across the tread. This shows there is less than 1.6 mm (1/16 inch) of tread left on the tire. Replace the tire when this happens.

Do not wait for the band to appear across the entire tread before replacing the tire.

The ABS works by comparing the speed of the wheels. The tire size affects wheel speed. When replacing tires, all 4 tires must use the same size originally supplied with the vehicle. Using tires of a different size can cause the ABS (Anti-lock Brake System) and ESC (Electronic Stability Control) to work irregularly.

✻ NOTICE

We recommend that when replacing tires, use the same which were originally supplied with the vehicle. If not, driving performance could be altered.

Compact spare tire replacement

A compact spare tire has a shorter tread life than a regular size tire. Replace it when you can see the tread wear indicator bars on the tire. The replacement compact spare tire should be the same size and design tire as the one provided with your new vehicle and should be mounted on the same compact spare tire wheel. The compact spare tire is not designed to be mounted on a regular size wheel, and the compact spare tire wheel is not designed for mounting a regular size tire.

Wheel replacement

When replacing the metal wheels for any reason, make sure the new wheels are equivalent to the original factory units in diameter, rim width and offset.

A wheel that is not the correct size may adversely affect wheel and bearing life, braking and stopping abilities, handling characteristics, ground clearance, body-to-tire clearance, snow chain clearance, speedometer and odometer calibration, headlight aim and bumper height.

⚠ **CAUTION - Wheel**

Wheels that do not meet Kia's specifications may fit poorly and result in damage to the vehicle or unusual handling and poor vehicle control.

Tire traction

Tire traction can be reduced if you drive on worn tires, tires that are improperly inflated or on slippery road surfaces. Tires should be replaced when tread wear indicators appear. Slow down whenever there is rain, snow or ice on the road, to reduce the possibility of losing control of the vehicle.

Tire maintenance

In addition to proper inflation, correct wheel alignment helps to decrease tire wear. If you find a tire is worn unevenly, have your dealer check the wheel alignment.

When you have new tires installed, make sure they are balanced. This will increase vehicle ride comfort and tire life. Additionally, a tire should always be rebalanced if it is removed from the wheel.

Tire sidewall labeling

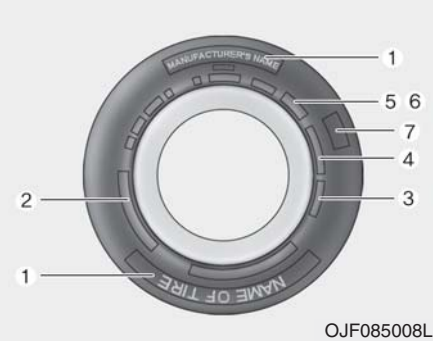

OJF085008L

This information identifies and describes the fundamental characteristics of the tire and also provides the tire identification number (TIN) for safety standard certification. The TIN can be used to identify the tire in case of a recall.

1. Manufacturer or brand name

Manufacturer or Brand name is shown.

2. Tire size designation

A tire's sidewall is marked with a tire size designation. You will need this information when selecting replacement tires for your car. The following explains what the letters and numbers in the tire size designation mean.

Example tire size designation:

(These numbers are provided as an example only; your tire size designator could vary depending on your vehicle.)

P205/55R16 89H

P - Applicable vehicle type (tires marked with the prefix "P" are intended for use on passenger vehicles or light trucks; however, not all tires have this marking).

205 - Tire width in millimeters.

55 - Aspect ratio. The tire's section height as a percentage of its width.

R - Tire construction code (Radial).

16 - Rim diameter in inches.

89 - Load Index, a numerical code associated with the maximum load the tire can carry.

H - Speed Rating Symbol. See the speed rating chart in this section for additional information.

Wheel size designation

Wheels are also marked with important information that you need if you ever have to replace one. The following explains what the letters and numbers in the wheel size designation mean.

Example wheel size designation:

6.0JX16

6.0 - Rim width in inches.

J - Rim contour designation.

16 - Rim diameter in inches.

Tire speed ratings

The chart below lists many of the different speed ratings currently being used for passenger vehicles. The speed rating is part of the tire size designation on the sidewall of the tire. This symbol corresponds to that tire's designed maximum safe operating speed.

Speed Rating Symbol	Maximum Speed
S	180 km/h (112 mph)
T	190 km/h (118 mph)
H	210 km/h (130 mph)
V	240 km/h (149 mph)
W	270 km/h (168 mph)
Y	300 km/h (186 mph)

3. Checking tire life (TIN : Tire Identification Number)

Any tires that are over 6 years old, based on the manufacturing date, (including the spare tire) should be replaced by new ones. You can find the manufacturing date on the tire sidewall (possibly on the inside of the wheel), displaying the DOT Code. The DOT Code is a series of numbers on a tire consisting of numbers and English letters. The manufacturing date is designated by the last four digits (characters) of the DOT code.

DOT : XXXX XXXX OOOO

The front part of the DOT means a plant code number, tire size and tread pattern and the last four numbers indicate week and year manufactured.

For example:

DOT XXXX XXXX 1620 represents that the tire was produced in the 16th week of 2020.

⚠ WARNING - Tire age

Replace tires within the recommended time frame. Failure to replace tires as recommended can result in sudden tire failure, which could lead to a loss of control and an accident.

4. Tire ply composition and material

The number of layers or plies of rubber-coated fabric in the tire. Tire manufacturers also must indicate the materials in the tire, which include steel, nylon, polyester, and others. The letter "R" means radial ply construction; the letter "D" means diagonal or bias ply construction; and the letter "B" means belted-bias ply construction.

5. Maximum permissible inflation pressure

This number is the greatest amount of air pressure that should be put in the tire. Do not exceed the maximum permissible inflation pressure. Refer to the Tire and Loading Information label for recommended inflation pressure.

6. Maximum load rating

This number indicates the maximum load in kilograms and pounds that can be carried by the tire. When replacing the tires on the vehicle, always use a tire that has the same load rating as the factory installed tire.

7. Uniform Tire Quality Grading

Quality grades can be found where applicable on the tire sidewall between tread shoulder and maximum section width.

For example:

Treadwear 200

Traction AA

Temperature A

Tread wear

The tread wear grade is a comparative rating based on the wear rate of the tire when tested under controlled conditions on a specified government test course. For example, a tire graded 150 would wear one-and-a-half times (1½) as well on the government course as a tire graded 100.

The relative performance of tires depends upon the actual conditions of their use, however, and may depart significantly from the norm due to variations in driving habits, service practices and differences in road characteristics and climate.

Tires degrade over time, even when they are not being used. Regardless of the remaining tread, we recommend that tires be replaced after approximately six (6) years of normal service. Heat caused by hot climates or frequent high loading conditions can accelerate the aging process.

These grades are molded on the side-walls of passenger vehicle tires. The tires available as standard or optional equipment on your vehicles may vary with respect to grade.

Traction - AA, A, B & C

The traction grades, from highest to lowest, are AA, A, B and C. Those grades represent the tires ability to stop on wet pavement as measured under controlled conditions on specified government test surfaces of asphalt and concrete. A tire marked C may have poor traction performance.

The traction grade assigned to this tire is based on straight-ahead braking traction tests, and does not include acceleration, cornering, hydroplaning, or peak traction characteristics.

Temperature -A, B & C

The temperature grades are A (the highest), B and C representing the tire's resistance to the generation of heat and its ability to dissipate heat when tested under controlled conditions on a specified indoor laboratory test wheel.

Sustained high temperature can cause the material of the tire to degenerate and reduce tire life, and excessive temperature can lead to sudden tire failure. Grades B and A represent higher levels of performance on the laboratory test wheel than the minimum required by law.

Tire terminology and definitions

Air Pressure: The amount of air inside the tire pressing outward on the tire. Air pressure is expressed in kilopascal (kPa) or pounds per square inch (psi).

Accessory Weight: This means the combined weight of optional accessories. Some examples of optional accessories are, automatic transmission, power seats and air conditioning.

Aspect Ratio: The relationship of a tire's height to its width.

Belt: A rubber coated layer of cords that is located between the plies and the tread. Cords may be made from steel or other reinforcing materials.

Bead: The tire bead contains steel wires wrapped by steel cords that hold the tire onto the rim.

Bias Ply Tire: A pneumatic tire in which the plies are laid at alternate angles less than 90 degrees to the centerline of the tread.

Cold Tire Pressure: The amount of air pressure in a tire, measured in kilopascals (kPa) or pounds per square inch (psi) before a tire has built up heat from driving.

Curb Weight: This means the weight of a motor vehicle with standard and optional equipment including the maximum capacity of fuel, oil and coolant, but without passengers and cargo.

DOT Markings: The DOT code includes the Tire Identification Number (TIN), an alphanumeric designator which can also identify the tire manufacturer, production plant, brand and date of production.

GVWR: Gross Vehicle Weight Rating

GAWR FRT: Gross Axle Weight Rating for the Front Axle.

GAWR RR: Gross Axle Weight Rating for the Rear axle.

Intended Outboard Sidewall: The side of an asymmetrical tire, that must always face outward when mounted on a vehicle.

Kilopascal (kPa): The metric unit for air pressure.

Light truck(LT) tire: A tire designated by its manufacturer as primarily intended for use on lightweight trucks or multipurpose passenger vehicles.

Load Index: An assigned number ranging from 1 to 279 that corresponds to the load carrying capacity of a tire.

Load ratings: The maximum load that a tire is rated to carry for a given inflation pressure.

Maximum Inflation Pressure: The maximum air pressure to which a cold tire may be inflated. The maximum air pressure is molded onto the sidewall.

Maximum Load Rating: The load rating for a tire at the maximum permissible inflation pressure for that tire.

Maximum Loaded Vehicle Weight: The sum of curb weight; accessory weight; vehicle capacity weight; and production options weight.

Normal Occupant Weight: The number of occupants a vehicle is designed to seat multiplied by 68 kg (150 lbs.).

Occupant Distribution: Designated seating positions.

Outward Facing Sidewall: The side of an asymmetrical tire that has a particular side that faces outward when mounted on a vehicle. The outward facing sidewall bears white lettering or bears manufacturer, brand, and/or model name molding that is higher or deeper than the same moldings on the inner facing sidewall.

Passenger (P-Metric) Tire: A tire used on passenger cars and some light duty trucks and multipurpose vehicles.

Ply: A layer of rubber-coated parallel cords

Pneumatic tire: A mechanical device made of rubber, chemicals, fabric and steel or other materials, that, when mounted on an automotive wheel, provides the traction and contains the gas or fluid that sustains the load.

Production options weight: The combined weight of installed regular production options weighing over 5 lb.(2.3 kg) in excess of the standard items which they replace, not previously considered in curb weight or accessory weight, including heavy duty brakes, ride levelers, roof rack, heavy duty battery, and special trim.

Recommended Inflation Pressure: Vehicle manufacturer's recommended tire inflation pressure and shown on the tire placard.

Radial Ply Tire: A pneumatic tire in which the ply cords that extend to the beads are laid at 90 degrees to the centerline of the tread.

Rim: A metal support for a tire and upon which the tire beads are seated.

Sidewall: The portion of a tire between the tread and the bead.

Speed Rating: An alphanumeric code assigned to a tire indicating the maximum speed at which a tire can operate.

Traction: The friction between the tire and the road surface. The amount of grip provided.

Tread: The portion of a tire that comes into contact with the road.

Treadwear Indicators: Narrow bands, sometimes called "wear bars," that show across the tread of a tire when only 1/16 inch of tread remains.

UTQGS: Uniform Tire Quality Grading Standards, a tire information system that provides consumers with ratings for a tire's traction, temperature and treadwear. Ratings are determined by tire manufacturers using government testing procedures. The ratings are molded into the sidewall of the tire.

Vehicle Capacity Weight: The number of designated seating positions multiplied by 68 kg (150 lbs.) plus the rated cargo and luggage load.

Vehicle Maximum Load on the Tire: Load on an individual tire due to curb and accessory weight plus maximum occupant and cargo weight.

Vehicle Normal Load on the Tire: Load on an individual tire that is determined by distributing to each axle its share of the curb weight, accessory weight, and normal occupant weight and driving by 2.

Vehicle Placard: A label permanently attached to a vehicle showing the original equipment tire size and recommended inflation pressure.

All season tires

Kia specifies all season tires on some models to provide good performance for use all year round, including snowy and icy road conditions. All season tires are identified by ALL SEASON and/or M+S (Mud and Snow) on the tire sidewall. Snow tires have better snow traction than all season tires and may be more appropriate in some areas.

Summer tires

Kia specifies summer tires on some models to provide superior performance on dry roads. Summer tire performance is substantially reduced in snow and ice. Summer tires do not have the tire traction rating M+S (Mud and Snow) on the tire side wall. If you plan to operate your vehicle in snowy or icy conditions, Kia recommends the use of snow tires or all season tires on all four wheels.

Snow tires

If you equip your car with snow tires, they should be the same size and have the same load capacity as the original tires. Snow tires should be installed on all four wheels; otherwise, poor handling may result.

Snow tires should carry 28 kPa (4 psi) more air pressure than the pressure recommended for the standard tires on the tire label on the driver's side of the center pillar, or up to the maximum pressure shown on the tire sidewall, whichever is less.

Do not drive faster than 120 km/h (75 mph) when your vehicle is equipped with snow tires.

Radial-ply tires

Radial-ply tires provide improved tread life, road hazard resistance and smoother high speed ride. The radial-ply tires used on this vehicle are of belted construction and are selected to complement the ride and handling characteristics of your vehicle.

Radial-ply tires have the same load carrying capacity as bias-ply or bias belted tires of the same size and use the same recommended inflation pressure. Mixing of radial-ply tires with bias-ply or bias belted tires is not recommended. Any combinations of radial-ply and bias-ply or bias belted tires when used on the same vehicle will seriously deteriorate vehicle handling. The best rule to follow is: identical radial-ply tires should always be used as a set of four.

Longer wearing tires can be more susceptible to irregular tread wear. It is very important to follow the tire rotation interval shown in this section to achieve the tread life potential of these tires. Cuts and punctures in radial-ply tires are repairable only in the tread area, because of sidewall flexing. Consult your tire dealer for radial-ply tire repairs.

Low aspect ratio tire (if equipped)

Low aspect ratio tires, whose aspect ratio is lower than 50, are provided for sporty looks.

Because the low aspect ratio tires are optimized for handling and braking, it may be more uncomfortable to ride in and there is more noise compare with normal tires.

⚠ **CAUTION**

Because the sidewall of the low aspect ratio tire is shorter than the normal, the wheel and tire of the low aspect ratio tire is easier to be damaged. So, follow the instructions below.

- ***When driving on a rough road or off road, drive cautiously because tires and wheels may be damaged. And after driving, inspect tires and wheels.***
- ***When passing over a pothole, speed bump, manhole, or curb stone, drive slowly so that the tires and wheels are not damaged.***
- ***If the tire is impacted, we recommend that you inspect the tire condition or contact an authorized Kia dealer.***
- ***To prevent damage to the tire, inspect the tire condition and pressure every 3,000 km (1,900 miles).***

- It is not easy to recognize the tire damage with your own eyes. But if there is the slightest hint of tire damage, even though you cannot see it, have the tire checked or replaced because the tire damage may cause air leakage from the tire.
- If the tire is damaged by driving on a rough road, off road, pothole, manhole, or curb stone, it will not be covered by the warranty.
- You can find out the tire information on the tire sidewall.

FUSES

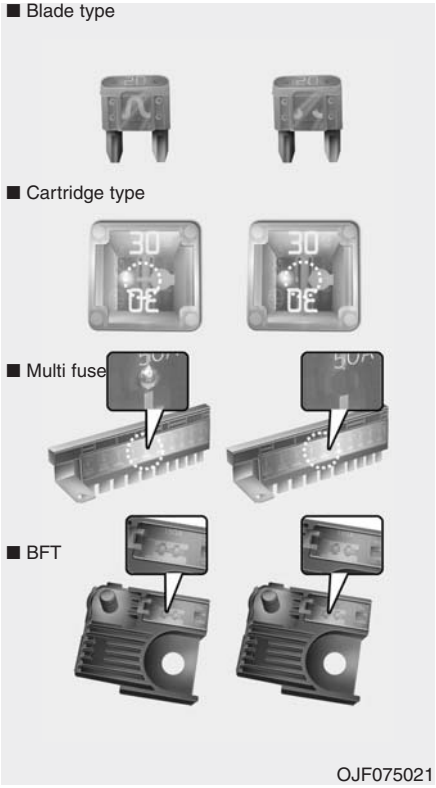

❊ Left side : Normal , Right side : Blown

A vehicle's electrical system is protected from electrical overload damage by fuses.

This vehicle has 2 (or 3) fuse panels, one located in the driver's side panel bolster, the other in the engine compartment near the battery.

If any of your vehicle's lights, accessories, or controls do not work, check the appropriate circuit fuse. If a fuse has blown, the element inside the fuse will melt.

If the electrical system does not work, first check the driver's side fuse panel.

Always replace a blown fuse with one of the same rating.

If the replacement fuse blows, this indicates an electrical problem. Avoid using the system involved and immediately consult an authorized Kia dealer.

Three kinds of fuses are used: blade type for lower amperage rating, cartridge type, and multi fuse for higher amperage ratings.

⚠ WARNING - Fuse replacement

- **Never replace a fuse with anything but another fuse of the same rating.**
- **A higher capacity fuse could cause damage and possibly a fire.**
- **Never install a wire or aluminum foil instead of the proper fuse - even as a temporary repair. It may cause extensive wiring damage and a possible fire.**
- **Do not arbitrarily modify or add-on electric wiring to the vehicle.**

⚠ CAUTION

Do not use a screwdriver or any other metal object to remove fuses because it may cause a short circuit and damage the system.

✻ NOTICE

- When replacing fuse, turn the ignition "OFF" and turn off switches of all electrical devices then remove battery (-) terminal.
- The actual fuse/relay panel label may differ from equipped items.

⚠ WARNING - Electrical Fire

Always ensure replacements fuses and relays are securely fastened when installed. Failure to do so can result in a vehicle fire.

⚠ CAUTION

- *When replacing a blown fuse or relay, make sure the new fuse or relay fits tightly into the clips. Failure to tightly install the fuse or relay may cause damage to the wiring and electric systems.*
- *Do not remove fuses, relays and terminals fastened with bolts or nuts. The fuses, relays and terminals may not be fastened correctly which may cause vehicle damage.*

⚠ CAUTION

- *Do not input any other objects except fuses or relays into fuse/relay terminals such as a driver or wiring. It may cause contact failure and system malfunction.*
- *Do not plug in screwdrivers or aftermarket wiring into the terminal originally designed for fuse and relays only.*

(Continued)

(Continued)

The electrical system and wiring of the vehicle interior may be damaged or burned due to contact failure.

- *If you directly connect the wire on the taillight or replace the bulb which is over the regulated capacity to install trailers etc., the inner junction block can get burned.*

⚠ WARNING - Electrical wiring repairs

All electrical repairs should be performed by authorized Kia dealerships using approved Kia parts. Using other wiring components, especially when retrofitting the audio system or theft alarm system, or remote engine control may cause vehicle damage and increase the risk of a vehicle fire.

✻ NOTICE - Remodeling Prohibited

Do not rewire your vehicle in any way as doing so may affect the performance of several safety features in your vehicle. Rewiring your vehicle may also void your warranty and cause you to be responsible for any subsequent vehicle damage which may result.

✻ NOTICE - Window tinting precaution

Window tint(especially metallic film) might cause communication disorder or poor radio reception, and malfunction of the automatic lighting system due to excessive change of illumination inside the vehicle. The solution used might also flow into electric, electronic devices causing disorder and failure.

Inner panel fuse replacement

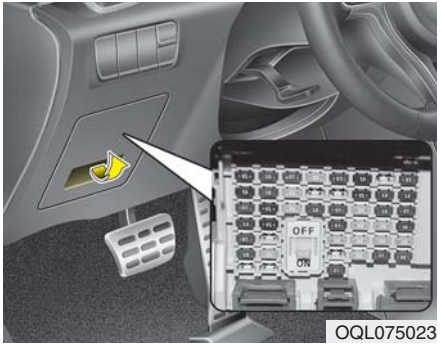

OQL075023

1. Turn the ignition switch and all other switches off.
2. Open the fuse panel cover.

If the switch is located in the “OFF” position, a caution indicator will be displayed in the cluster.

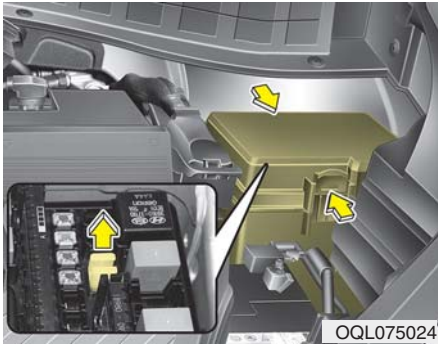
OQL075024

3. Pull the suspected fuse straight out. Use the removal tool provided on the engine compartment fuse panel cover.
4. Check the removed fuse; replace it if it is blown.

   Spare fuses are provided in the engine compartment fuse panel.
5. Push in a new fuse of the same rating, and make sure it fits tightly in the clips.

If it fits loosely, consult an authorized Kia dealer.

If you do not have a spare, use a fuse of the same rating from a circuit you may not need for operating the vehicle, such as the power outlet fuse.

If the head lamp, turn signal lamp, stop signal lamp, fog lamp, DRL, tail lamp, HMSL do not work and the fuses are not blown, check the fuse panel in the engine compartment. If a fuse is blown, it must be replaced.

✻ NOTICE

If the headlamp, fog lamp, turn signal lamp, or tail lamp malfunction even without any problem to the lamps, have the vehicle checked by an authorized Kia dealer for assistance.

⚠ CAUTION - Fuse Panel Covers

- ***Set all switches to ON before driving.***
- ***If the vehicle is going to be unused for over 1 month, set all switches to OFF to prevent the batteries from draining.***
- ***The contact points of the switches may wear out with excessive use. Please refrain from excessive use of the switches (except for long-term parking for over 1 month).***

Fuse switch

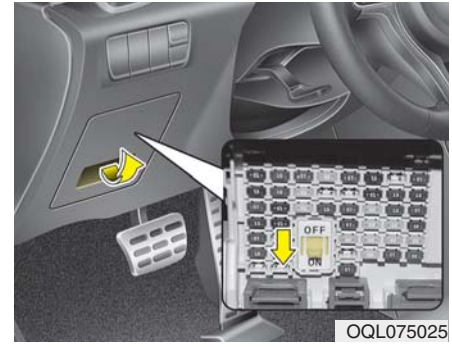

OQL075025

Always set the fuse switch to the ON position before using the vehicle.

If you move the switch to the OFF position, some items such as audio and digital clock must be reset and transmitter (or smart key) may not work properly. When the switch is Off, the caution indicator will be displayed on the instrument cluster.

Always place the fuse switch in the ON position while driving the vehicle.

If the switch is located in the “OFF” position, a caution indicator will be displayed in the cluster.

Engine compartment fuse replacement

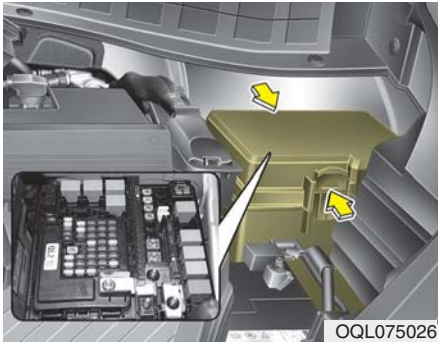

1. Turn the ignition switch and all other switches off.
2. Remove the fuse panel cover by pressing the tab and pulling the cover up. When the blade type fuse is disconnected, remove it by using the clip designed for changing fuses located in the engine compartment fuse box. Upon removal, securely insert reserve fuse of the same rating.
3. Check the removed fuse; replace it if it is blown. To remove or insert the fuse, use the fuse puller in the engine compartment fuse panel.
4. Push in a new fuse of the same rating, and make sure it fits tightly in the clips. If it fits loosely, consult an authorized Kia dealer.

⚠ CAUTION

After checking the fuse panel in the engine compartment, securely install the fuse panel cover through the audible clicking sound.

If not, electrical failures may occur from water contact.

Multi fuse

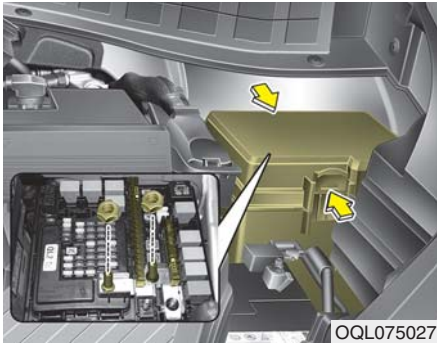

If the multi fuse is blown, it must be removed as follows:

1. Turn off the engine.
2. Disconnect the negative battery cable.
3. Remove the nuts shown in the picture above.
4. Replace the fuse with a new one of the same rating.
5. Reverse these steps to reinstall the multi fuse.

✻ NOTICE

Do not disassemble nor assemble the multi fuse when it is secured with nuts and bolts. Incorrect or partial assembly torque may cause a fire. Have the vehicle checked by an authorized Kia dealer.

Main fuse

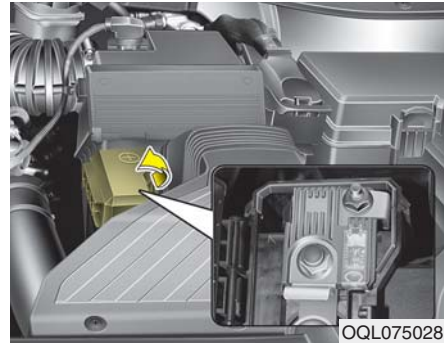

If the main fuse is blown, it must be removed as follows:

1. Turn off the engine.
2. Disconnect the negative battery cable.
3. Remove the nuts shown in the picture above.
4. Replace the fuse with a new one of the same rating.
5. Reverse these steps to reinstall the main fuse.

✻ NOTICE

The electronic system may not function correctly even when the engine compartment and internal fuse box's individual fuses are not disconnected. In such case the cause of the problem may be disconnection of the main fuse (BFT type), which is located inside the positive battery terminal (+) cap.
Since the main fuse is designed more intricately than other parts, have the vehicle checked by an authorized Kia dealer.

⚠ CAUTION

Visually inspect the battery cap to ensure it is securely closed. If the battery cap is not securely closed, moisture may enter the system and damage the electrical components.

Fuse/relay panel description

Driver's side fuse panel

OQL075029

Inside the fuse/relay panel covers, you can find the fuse/relay label describing fuse/relay name and capacity.

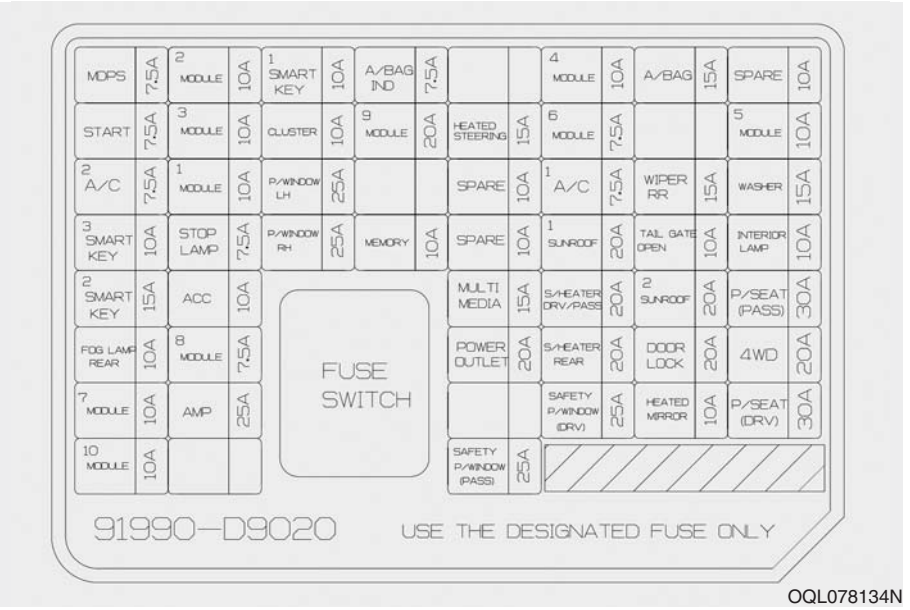

OQL078134N

✻ NOTICE

Not all fuse panel descriptions in this manual may be applicable to your vehicle. It is accurate at the time of printing. When you inspect the fuse panel in your vehicle, refer to the fuse panel label.

Instrument panel (Driver's side fuse panel)

Fuse Name	Fuse rating	Circuit Protected
MDPS	7.5A	MDPS Unit
MODULE 2	10A	Cooling Fan Unit
SMART KEY 1	10A	Smart Key Control Module/Immobilizer Module
A/BAG IND	7.5A	Instrument Cluster [Audio & Manual A/C] Hazard Switch [Audio & Auto A/C] A/C Control Module [Navigation] Center Facia Lamp
MODULE 4	10A	Console Switch, Blind Spot Detection Radar LH/RH, AWD ECM, BCM, Lane Departure Warning Control Module
AIR BAG	15A	SRS Control Module, Passenger seat Occupant Detection Unit
START	7.5A	[W/O Smart Key & IMMO.] ICM Relay Box (Burglar Alarm Relay), Ignition Switch [With Smart Key / IMMO.] Transmission Range Switch, ECM, Smart Key Control Module
MODULE 3	10A	Front/Rear Seat Warmer Control Module, ATM Shift Lever ILL., Front Air Ventilation Seat Control Module, A/V & Navigation Head Unit, Electro Chromic Mirror, Audio, A/C Control Module, Multipurpose Check Connector, Adaptive Front Lighting Module, Crash Pad Switch, Console Switch
CLUSTER	10A	Instrument Cluster
MODULE 9	20A	PCB Block (Fuse - ABS 3, VACUUM PUMP 2, ECU 6, AEB, TCU 2, MODULE)

Fuse Name	Fuse rating	Circuit Protected
HEATED STEERING	15A	BCM
MODULE 6	7.5A	Front/Rear Seat Warmer Control Module, Front Air Ventilation Seat Control Module
MODULE 5	10A	BCM, Smart Key Control Module
A/C 2	7.5A	A/C Control Module
MODULE 1	10A	BCM, ATM Shift Lever
P/ WINDOW LH	25A	Power Window Main Switch
A/C 1	7.5A	A/C Control Module, Cluster Ionizer, E/R Junction Block (Blower Relay)
WIPER RR	15A	Rear Wiper Motor, ICM Relay Box (Rear Wiper Relay)
WASHER	15A	Multifunction Switch
SMART KEY 3	10A	[W/O Smart Key] Immobilizer Module [With Smart Key] Smart Key Control Module, Start/Stop Button Switch
STOP LAMP	7.5A	Smart Key Control Module, Stop Lamp Switch
P/ WINDOW RH	25A	Power Window Main Switch, Passenger Power Window Switch

Fuse Name	Fuse rating	Circuit Protected
MEMORY	10A	Instrument Cluster, BCM, ICM Relay Box (Outside Mirror Folding/Unfolding Relay), Electro Chromic Mirror, A/C Control Module, Console Switch, Crash Pad Switch
SUN ROOF 1	20A	Panorama Sunroof
TAIL GATE OPEN	10A	Tail Gate Relay
INTERIOR LAMP	10A	Ignition Key Ill.& Door Warning Switch, Room Lamp, Overhead Console Lamp, Front Vanity Lamp LH/RH, Rear Personal Lamp LH/RH, Luggage Lamp, Glove Box Lamp, Wireless Charger
SMART KEY 2	15A	Smart Key Control Module
ACC	10A	Rear USB Charger, AMP, Power Outside Mirror Switch, PCB Block(Power Outlet Relay), Smart Key Control Module, Audio, A/V & Navigation Head Unit, BCM, Wireless Charger
MULTI MEDIA	15A	Audio, A/V & Navigation Head Unit, Rear USB Charger
S/HEATER DRV/PASS	20A	Front Seat Warmer Control Module, Front Air Ventilation Seat Control Module
SUN ROOF 2	20A	Panorama Sunroof
P/SEAT (PASS)	30A	Passenger Seat Manual Switch
MODULE 8	7.5A	Key Solenoid, On Board Diagnostic Module

Fuse Name	Fuse rating	Circuit Protected
POWER OUTLET	20A	Front Power Outlet #1 (Front Cigarette Lighter)
S/HEATER REAR	20A	Rear Seat Warmer Control Module
DOOR LOCK	20A	Door Lock/Unlock Relay
4WD	20A	AWD ECM
MODULE 7	10A	Hazard Switch, Driver/Passenger Smart Key Outside Handle, AEB Sensor
AMP	25A	AMP
SAFETY P/ WINDOW (DRV)	25A	Driver's seat Safety Power Window Module
HEATED MIRROR	10A	Driver/Passenger Power Outside Mirror, A/C Control Module
P/SEAT (DRV)	30A	Driver Seat Manual Switch
MODULE 10	10A	BCM
SAFETY P/WINDOW (PASS)	25A	Passenger's seat Safety Power Window Module

Engine compartment fuse panel

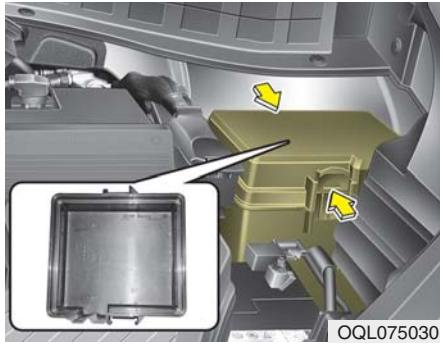
OQL075030

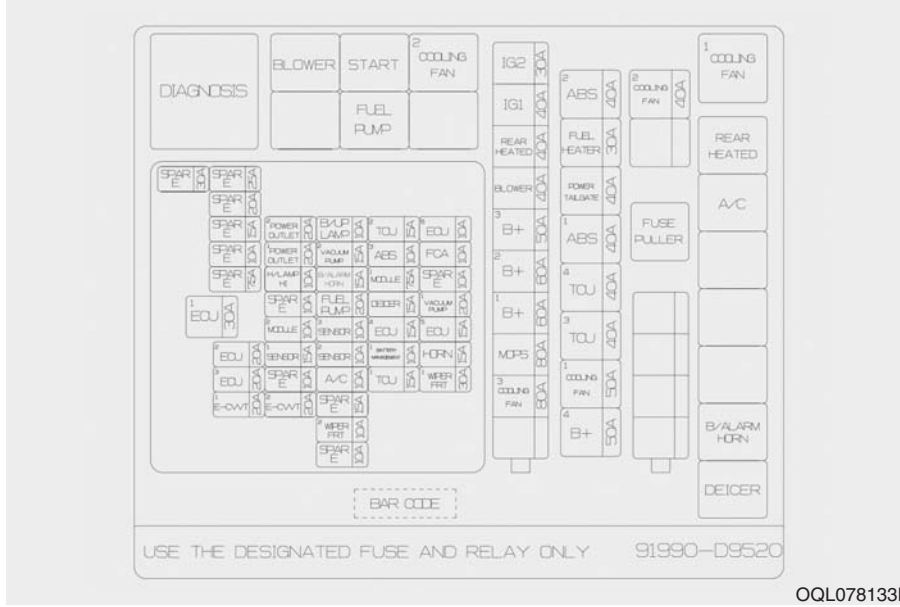

OQL078133N

Engine room compartment fuse panel

Fuse Name		Fuse rating	Circuit Protected
MULTI FUSE	COOLING FAN 3	80A	Cooling Fan Motor
	MDPS	80A	MDPS Unit
	B+ 1	60A	Smart Junction Block (IPS 2 (5CH), IPS 3 (2CH), IPS 4 (2CH), IPS 5 (2CH), IPS 6 (1CH), Fuse - AMP), Module 10
	B+ 2	60A	Smart Junction Block (IPS 1 (5CH), Fuse - MODULE 7, SMART KEY 2, SMART KET 3, STOP LAMP)
	B+ 3	50A	Smart Junction Block (Fuse - SUNROOF 1, SUNROOF 2, S/HEATER DRV/PASS, S/HEATER REAR, SAFETY P/WINDOW, Power Window Relay)
	BLOWER	40A	Blower Relay
	REAR HEATED	40A	Rear Heated Relay
	IG1	40A	[W/O Smart Key] Ignition Switch, [With Smart Key] PCB Block (PDM (IG1)/PDM (ACC) Relay)
	IG2	30A	Start Relay, [W/O Smart Key] Ignition Switch, [With Smart Key] PCB Block (PDM (IG2) Relay)

Fuse Name		Fuse rating	Circuit Protected
FUSE	B+ 4	50A	Smart Junction Block (Fuse - AWD, P/SEAT (DRV), P/SEAT (PASS), TAIL GATE OPEN, DOOR LOCK, Leak Current Autocut Device Relay), Module 8
	COOLING FAN 1	50A	Cooling Fan 1 Relay
	ABS 1	40A	ESC Control Module, Multipurpose Check Connector
	POWER LIFTGATE	40A	Power Liftgate Module
	ABS 2	40A	ESC Module
	COOLING FAN 2	40A	Cooling Fan 1 Relay
	WIPER FRT 2	10A	BCM
	E-CVVT 2	20A	PCM
	E-CVVT 1	20A	PCM
	WIPER FRT 1	30A	[W/O Smart Key] Ignition Switch, [With Smart Key] PDM (IG2) Relay
	TCU 1	15A	PCM
	A/C	10A	Air Control Unit Relay
	ECU 3	20A	PCM
	HORN	15A	Horn Relay

Fuse Name		Fuse rating	Circuit Protected
FUSE	BATTERY MANAGEMENT	10A	Battery Sensor
	SENSOR 2	10A	Oil Control Valve, Purge Control Solenoid Valve, Variable Intake Solenoid Valve, RCV Control Solenoid
	SENSOR 1	15A	Oxygen Sensor (Up/Down)
	ECU 2	20A	Ignition Coil #1/#2/#3/#4
	ECU 4	15A	PCM
	SENSOR 3	10A	E/R Junction Block (Cooling Fan 1 Relay), Canister Close Valve, E/R Junction Block (Air Control Unit
	MODULE 2	10A	E/R Junction Block (Fuel Pump Relay)
	VACUUM PUMP 1	20A	Vacuum Pump
	DEICER	15A	E/R Junction Block (Deicer Relay)
	FUEL PUMP	20A	Fuel Pump Relay
	MODULE 1	7.5A	Stop Lamp Switch
	B/ALARM HORN	15A	E/R Junction Block (B/Alarm Horn Relay)
	H/LAMP HI	10A	BI-Function H/LP Relay

Fuse Name		Fuse rating	Circuit Protected
FUSE	FCA	10A	Forward Collision-avoidance Assist (FCA) Sensor
	ABS 3	10A	ESC Module
	VACUUM PUMP 2	15A	Vacuum Pump, Vacuum Switch
	POWER OUTLET 1	20A	Front Power Outlet #2
	ECU 6	10A	PCM
	TCU 2	15A	Transmission Range Switch
	B/UP LAMP	10A	Rear Bumper Lamp LH/RH, Electro Chromic Mirror
	POWER OUTLET 2	20A	Rear Power Outlet
	ECU 1	30A	Engine Control Relay

Relay

Relay Name	Type
Cooling Fan 1 Relay	MINI
Rear Defogger Relay	MICRO
A/C Relay	MICRO
B/Alarm Horn Relay	MICRO
Deicer Relay	MICRO
Cooling Fan 2 Relay	MICRO
Start Relay	MICRO
Blower Relay	MICRO
Fuel pump Relay	MICRO

Engine compartment fuse panel (Battery terminal cover)

OQL075032

✻ NOTICE

Not all fuse panel descriptions in this manual may be applicable to your vehicle. It is accurate at the time of printing. When you inspect the fuse panel in your vehicle, refer to the fuse panel label.

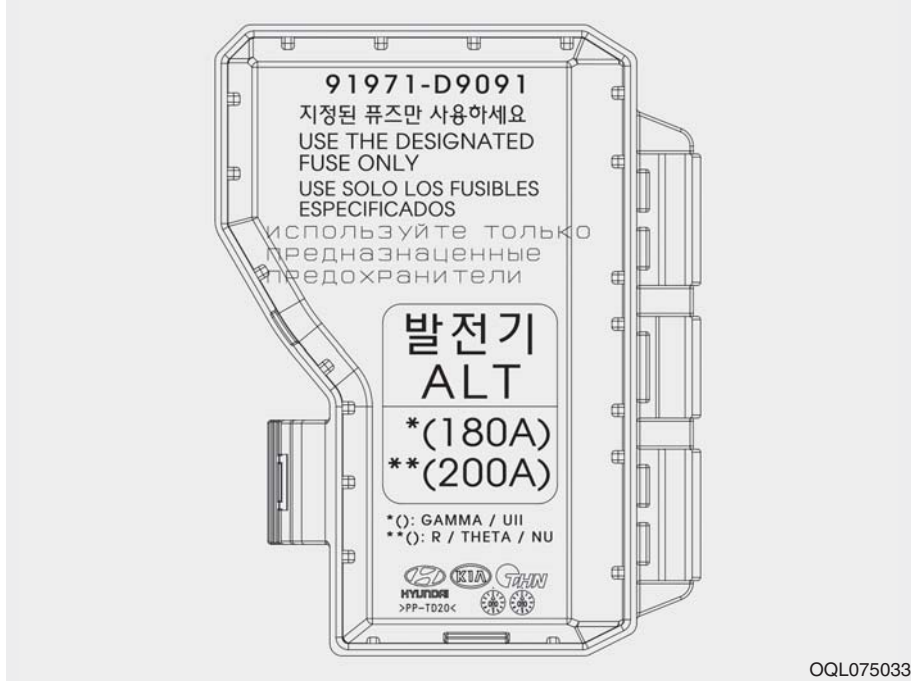

OQL075033

LIGHT BULBS

Bulb replacement precaution

Please keep extra bulbs on hand with appropriate wattage ratings in case of emergencies.

Refer to “Bulb Wattage” in chapter 8.

When changing lamps, first turn off the engine at a safe place, firmly apply the parking brake and detach the battery’s negative (-) terminal.

⚠ WARNING - Working on the lights

Prior to working on the light, firmly apply the parking brake, ensure that the ignition switch is turned to the LOCK position and turn off the lights to avoid sudden movement of the vehicle and burning your fingers or receiving an electric shock.

Use only bulbs of the specified wattage.

⚠ CAUTION - Light replacement

Be sure to replace the burned-out bulb with one of the same wattage rating. Otherwise, it may cause damage to the fuse or electric wiring system.

⚠ CAUTION - Headlamp Lens

To prevent damage, do not clean the headlamp lens with chemical solvents or strong detergents.

- **Lamp part malfunction due to net-work failure**

The headlamp, taillight, and fog light may light up when the head lamp switch is turned ON, and not light up when the taillight or for light switch is turned ON. This may be cause by network failure or vehicle electrical control system malfunction. If there is a problem, we recommend the system be serviced by an authorized Kia dealer.

- **Lamp part malfunction due to electrical control system stabilization**

A normally functioning lamp may flicker momentarily. This momentary occurrence is due to the stabilization function of the vehicle's electrical control system. If the lamp stops flickering after a few moments, the vehicle does not require service.

However, if the lamp goes out after the momentary flickering, or the flickering continues, we recommend the system be serviced by an authorized Kia dealer.

✻ NOTICE

- **If the light bulb or lamp connector is removed while the lamp is still on, the fuse box's electronic system may log it as a malfunction. Therefore, a lamp malfunction incident may be recorded as a Diagnostic Trouble Code (DTC) in the fuse box.**
- **It is normal for an operating lamp to flicker momentarily. This is due to a stabilization function of the vehicle's electronic control device. If the lamp lights up normally after momentarily blinking, then it is functioning as normal. However, if the lamp continues to flicker several times or turns off completely, there may be an error in the vehicle's electronic control device. Please have the vehicle checked by an authorized Kia dealer immediately.**

If you don't have the necessary tools, the correct bulbs and the expertise, consult an authorized Kia dealer. In many cases, it is difficult to replace vehicle light bulbs because other parts of the vehicle must be removed before you can get to the bulb. This is especially true if you have to remove the headlamp assembly to get to the bulb(s).

Removing/installing the headlamp assembly can result in damage to the vehicle.

If non-genuine parts or substandard bulbs are used, it may lead to blowing a fuse or other wiring damages.

Do not install extra lamps or LEDs to the vehicle. If additional lights are installed, it may lead to lamp malfunctions and flickering. Additionally, the fuse box and other writing may be damaged.

Light bulb position (Front)

■ Head lamp - Type A

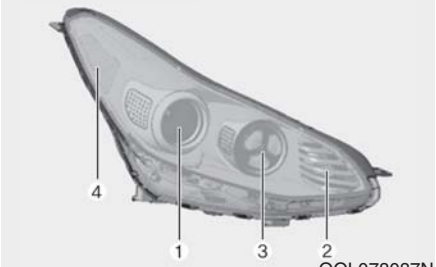

OQL078087N

■ Fog lamp - Type A

OQL078052N

■ Head lamp - Type B

OQL078039N

■ Fog lamp - Type B

OQL078053N

(1) Headlamp (Low/High)
(2) Front turn signal lamp (Bulb type)
(3) Day time running lamp/ Position lamp (Bulb type)
(4) Side marker (Bulb type)
(5) Front turn signal lamp (LED type)
(6) Day time running lamp/ Position lamp (LED type)
(7) Side marker (LED type)
(8) Fog lamp (Bulb type)
(9) Fog lamp (LED type)

Light bulb position (Rear)

■ Rear combination lamp - Type A

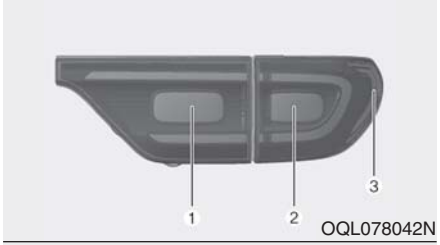

■ Rear combination lamp - Type B

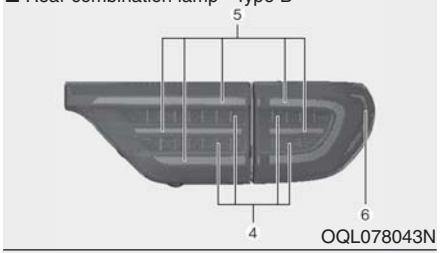

■ Rear turn signal & Back up lamp

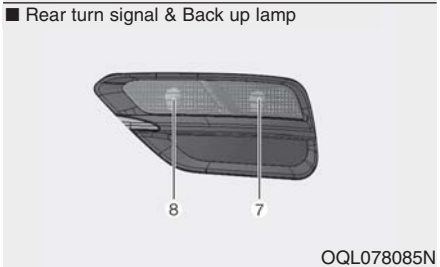

■ License plate lamp

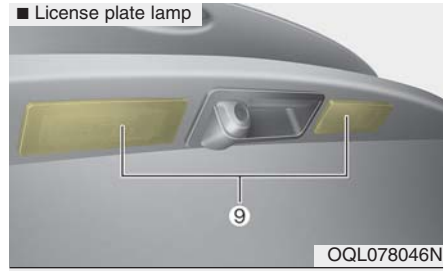

■ High mounted stop lamp

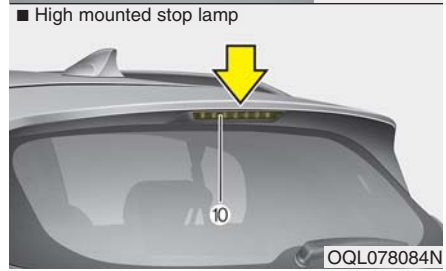

(1) Tail lamp (Bulb type)
(2) Stop and tail lamp (Bulb type)
(3) Side marker (Bulb type)
(4) Stop lamp (LED type)
(5) Stop and tail lamp (LED type)
(6) Side marker (LED type)
(7) Rear turn signal lamp (Bulb type)
(8) Back up lamp (Bulb type)
(9) License plate lamp (Bulb type)
(10) High mounted stop lamp (LED type)

Light bulb position (Side) (if equipped)

(1) Side repeater lamp (LED type)

Headlamp (High/Low beam) bulb replacement

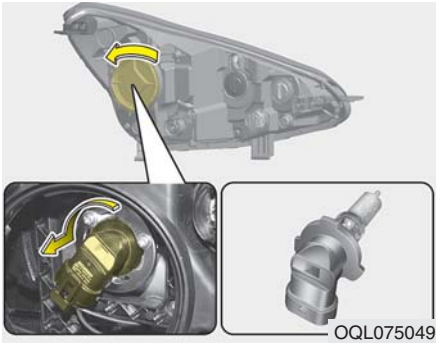

1. Open the hood.
2. Remove the headlamp bulb cover by turning it counterclockwise.
3. Disconnect the headlamp bulb socket-connector.
4. Remove the bulb-socket from the headlamp assembly by turning the bulb-socket counterclockwise until the tabs on the bulb-socket align with the slots on the headlamp assembly.
5. Install a new bulb-socket assembly in the headlamp assembly by aligning the tabs on the bulb-socket with the slots in the headlamp assembly. Push the bulb-socket into the headlamp assembly and turn the bulb-socket clockwise.
6. Install the headlamp bulb cover by turning it clockwise.

Headlamp bulb

⚠ WARNING - Halogen bulbs

Handle halogen bulbs with care.

- **Halogen bulbs contain pressurized gas that will produce flying pieces of glass if broken.**

(Continued)

(Continued)

- **Always handle them carefully, and avoid scratches and abrasions. If the bulbs are lit, avoid contact with liquids. Never touch the glass with bare hands. Residual oil may cause the bulb to overheat and burst when lit. A bulb should be operated only when installed in a headlamp.**
- **If a bulb becomes damaged or cracked, replace it immediately and carefully dispose of it.**
- **Wear eye protection when changing a bulb. Allow the bulb to cool down before handling it.**

Front turn signal lamp bulb replacement

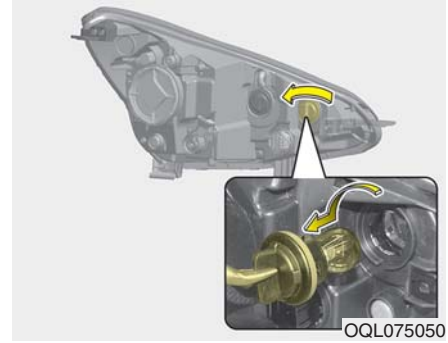

1. Open the hood.
2. Remove the bulb-socket from the headlamp assembly by turning the bulb-socket counterclockwise until the tabs on the bulb-socket align with the slots on the headlamp assembly.
3. Remove the bulb from the bulb-socket by pressing it in and rotating it counterclockwise until the tabs on the bulb align with the slots in the bulb-socket. Pull the bulb out of the bulb-socket.

4. Insert a new bulb by inserting it into the bulb-socket and rotating it until it locks into place.
5. Install the socket in the headlamp assembly by aligning the tabs on the bulb-socket with the slots in the assembly. Push the bulb-socket into the headlamp assembly and turn the socket clockwise.

Position lamp + DRL bulb replacement

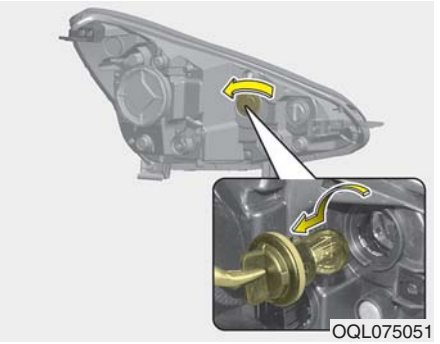

1. Open the hood.
2. Remove the bulb-socket from the headlamp assembly by turning the bulb-socket counterclockwise until the tabs on the bulb-socket align with the slots on the headlamp assembly.
3. Remove the bulb from the bulb-socket by pressing it in and rotating it counterclockwise until the tabs on the bulb align with the slots in the bulb-socket. Pull the bulb out of the bulb-socket.
4. Insert a new bulb by inserting it into the bulb-socket and rotating it until it locks into place.
5. Install the socket in the headlamp assembly by aligning the tabs on the bulb-socket with the slots in the assembly. Push the bulb-socket into the headlamp assembly and turn the socket clockwise.

Front fog lamp (Bulb and LED type) bulb replacement

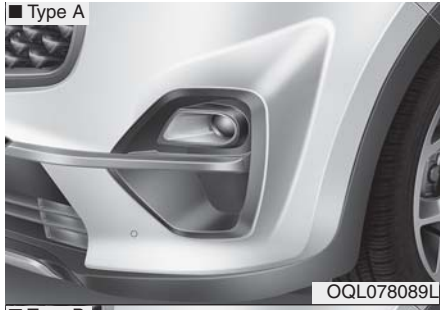

OQL078089L

OQL078088L

If the front fog lamp (Bulb and LED type) does not operate, we recommend that you have your vehicle checked by an authorized Kia dealer.

Stop and tail lamp bulb replacement

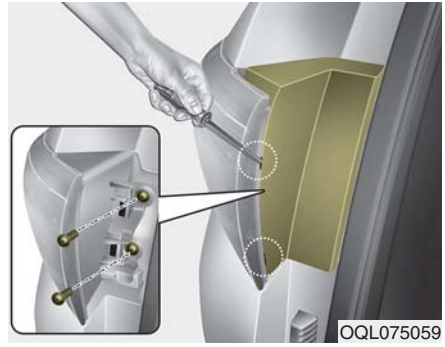

OQL075059

1. Open the liftgate.
2. Open the service cover.
3. Loosen the light assembly retaining screws with a cross-tip screwdriver.

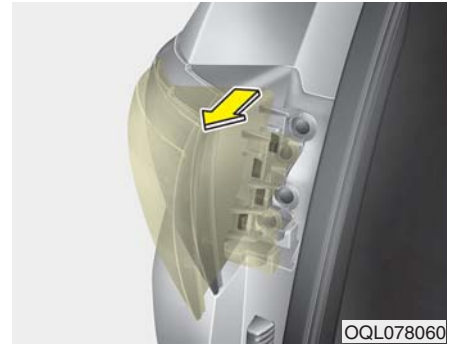

OQL078060

4. Remove the rear combination lamp assembly from the body of the vehicle.
5. Disconnect the rear combination lamp connector.

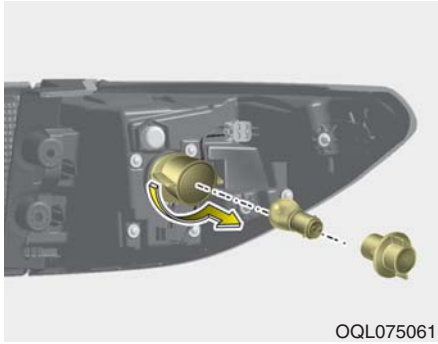

6. Remove the socket from the assembly by turning the socket counterclockwise until the tabs on the socket align with the slots on the assembly.
7. Remove the bulb from the socket by pressing it in and rotating it counterclockwise until the tabs on the bulb align with the slots in the socket. Pull the bulb out of the socket.
8. Insert a new bulb by inserting it into the socket and rotating it until it locks into place.
9. Install the socket in the assembly by aligning the tabs on the socket with the slots in the assembly. Push the socket into the assembly and turn the socket clockwise.
10. Install the rear combination lamp assembly to the body of the vehicle.
11. Install the service cover.

Tail lamp (inside) bulb replacement

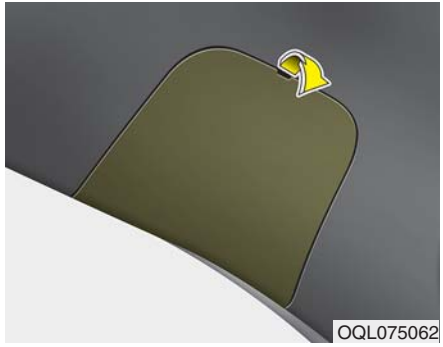

1. Open the liftgate.
2. Remove the service cover.

3. Remove the socket from the assembly by turning the socket counterclockwise until the tabs on the socket align with the slots on the assembly.
4. Remove the bulb from the socket by pressing it in and rotating it counter-clockwise until the tabs on the bulb align with the slots in the socket. Pull the bulb out of the socket.
5. Insert a new bulb by inserting it into the socket and rotating it until it locks into place.
6. Install the socket in the assembly by aligning the tabs on the socket with the slots in the assembly. Push the socket into the assembly and turn the socket clockwise.
7. Install the service cover by putting it into the service hole.

Stop and tail lamp (LED type) bulb replacement

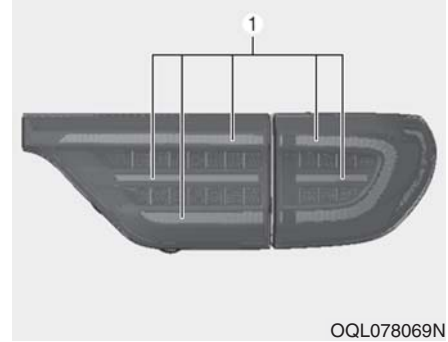

If the stop and tail lamp (LED type) (1) does not operate, we recommend that you have your vehicle checked by an authorized Kia dealer.

Back-up lamp and Rear turn signal lamp (Bulb type) bulb replacement

If the Back-up lamp and Rear turn signal lamp (Bulb type) does not operate, we recommend that you have your vehicle checked by an authorized Kia dealer.

High mounted stop lamp (LED type) bulb replacement

If the high mounted stop lamp (LED type) does not operate, we recommend that you have your vehicle checked by an authorized Kia dealer.

License plate lamp (Bulb type) bulb replacement

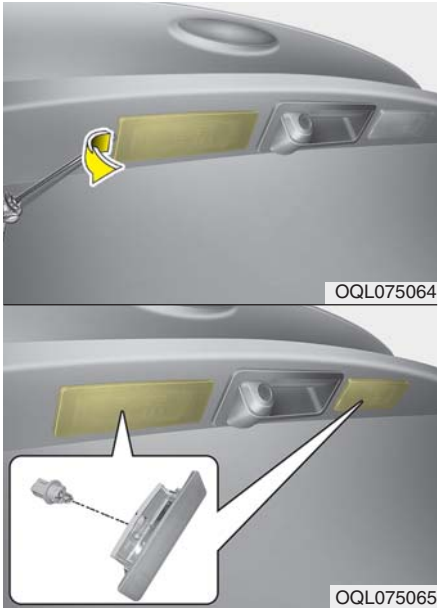

1. Using a flat-blade screwdriver, gently pry the lens cover from lamp housing.

2. Remove the socket from the assembly by turning the socket counterclockwise until the tabs on the socket align with the slots on the assembly.
3. Remove the bulb from bulb-socket by pulling it out.
4. Insert a new bulb by inserting it into the bulb-socket.
5. Install the socket in the assembly by aligning the tabs on the socket with the slots in the assembly. Push the socket into the assembly and turn the socket clockwise.
6. Align the lens cover tabs with the lamp housing notches and snap the lens into place.

Side repeater lamp (LED type) bulb replacement

OQL075047L

If the side repeater lamp (LED type) does not operate, we recommend that you have your vehicle checked by an authorized Kia dealer.

Map lamp (Bulb and LED type) bulb replacement

OQL075066

If the map lamp (Bulb and LED type) does not operate, we recommend that you have your vehicle checked by an authorized Kia dealer.

Vanity mirror lamp (Bulb type) bulb replacement

OQL075067

⚠ WARNING

Prior to working on the Interior lamps, ensure that the "OFF" button is depressed to avoid burning your fingers or receiving an electric shock.

1. Using a flat-blade screwdriver, gently pry the lamp assembly from interior.
2. Remove the bulb by pulling it straight out.
3. Install a new bulb in the socket.
4. Install the lamp assembly to interior.

✻ NOTICE

Be careful not to dirty or damage the lens, lens tab, and plastic housings.

Room lamp (Bulb type) bulb replacement

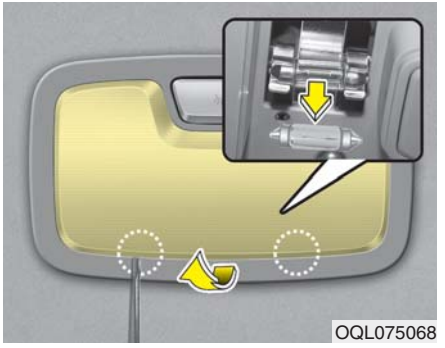
OQL075068

⚠ WARNING

Prior to working on the Interior lamps, ensure that the "OFF" button is depressed to avoid burning your fingers or receiving an electric shock.

1. Using a flat-blade screwdriver, gently pry the lens cover from lamp housing.
2. Remove the bulb by pulling it straight out.
3. Install a new bulb in the socket.
4. Align the lens cover tabs with the lamp housing notches and snap the lens into place.

✻ NOTICE

Be careful not to dirty or damage the lens, lens tab, and plastic housings.

Personal lamp (LED type) bulb replacement

OQL075054

If the personal lamp (LED type) does not operate, we recommend that you have your vehicle checked by an authorized Kia dealer.

Glove box lamp (Bulb type) bulb replacement

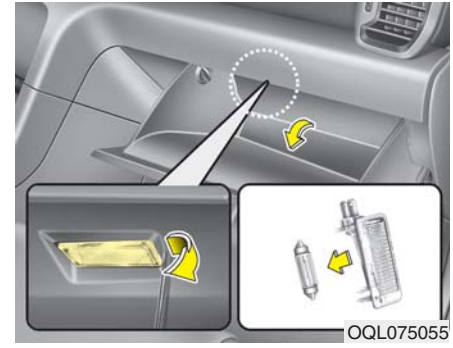
OQL075055

1. Using a flat-blade screwdriver, gently pry the lamp assembly from interior.
2. Remove the bulb by pulling it straight out.
3. Install a new bulb in the socket.
4. Install the lamp assembly to interior.

✻ NOTICE

Be careful not to dirty or damage the lens, lens tab, and plastic housings.

Liftgate room lamp (Bulb type) bulb replacement

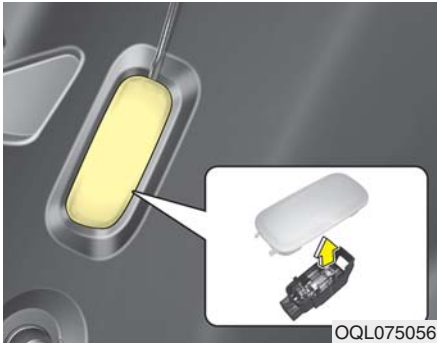

1. Using a flat-blade screwdriver, gently pry the lens cover from lamp housing.
2. Remove the bulb by pulling it straight out.
3. Install a new bulb in the socket.
4. Align the lens cover tabs with the lamp housing notches and snap the lens into place.

✻ NOTICE

Be careful not to dirty or damage the lens, lens tab, and plastic housings.

APPEARANCE CARE

Exterior care

Exterior general caution

It is very important to follow the label directions when using any chemical cleaner or polish. Read all warning and caution statements that appear on the label.

✻ NOTICE

If you park the vehicle around a stainless signboard or windshield building etc., the plastic exterior trim (bumper, spoiler, garnish, lamp, outside mirror etc.) may be damaged by reflected sunlight from the external structure. To avoid damaging the plastic exterior trim, park the vehicle away from the areas where the reflected light may occur or use a vehicle cover (Depending on the vehicle, the type of exterior trim applied such as spoiler may differ).

Finish maintenance

Washing

To help protect your vehicle's finish from rust and deterioration, wash it thoroughly and frequently at least once a month with lukewarm or cold water.

If you use your vehicle for off-road driving, you should wash it after each off-road trip. Pay special attention to the removal of any accumulation of salt, dirt, mud, and other foreign materials. Make sure the drain holes in the lower edges of the doors and rocker panels are kept clear and clean.

Insects, tar, tree sap, bird droppings, industrial pollution and similar deposits can damage your vehicle's finish if not removed immediately.

Even prompt washing with plain water may not completely remove all these deposits. A mild soap, safe for use on painted surfaces, may be used.

After washing, rinse the vehicle thoroughly with lukewarm or cold water. Do not allow soap to dry on the finish.

After washing the vehicle, test the brakes while driving slowly to see if they have been affected by water. If braking performance is impaired, dry the brakes by applying them lightly while maintaining a slow forward speed.

High-pressure washing

- When using high-pressure washers, make sure to maintain sufficient distance from the vehicle.

  Insufficient clearance or excessive pressure can lead to component damage or water penetration.
- Do not spray the camera, sensors or its surrounding area directly with a high pressure washer. Shock applied from high pressure water may cause the device to not operate normally.
- Do not bring the nozzle tip close to boots (rubber or plastic covers) or connectors as they may be damaged if they come into contact with high pressure water.

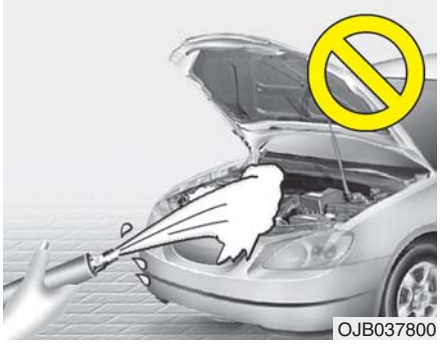

⚠ CAUTION - Wet engine

- ***Water washing in the engine compartment including high pressure water washing may cause the failure of electrical circuits located in the engine compartment.***
- ***Never allow water or other liquids to come in contact with electrical/electronic components inside the vehicle as this may damage them.***

Waxing

Wax the vehicle when water will no longer bead on the paint.

Always wash and dry the vehicle before waxing. Use a good quality liquid or paste wax, and follow the manufacturer's instructions. Wax all metal trim to protect it and to maintain its luster.

Removing oil, tar, and similar materials with a spot remover will usually strip the wax from the finish. Be sure to re-wax these areas even if the rest of the vehicle does not yet need waxing.

Do not apply wax on embossed unpainted unit, as it may tarnish the unit.

⚠ **CAUTION - Drying vehicle**

- ***Wiping dust or dirt off the body with a dry cloth will scratch the finish.***
- ***Do not use steel wool, abrasive cleaners, acid detergents or strong detergents containing high alkaline or caustic agents on chrome-plated or anodized aluminum parts. This may result in damage to the protective coating and cause discoloration or paint deterioration.***

Finish damage repair

Deep scratches or stone chips in the painted surface must be repaired promptly. Exposed metal will quickly rust and may develop into a major repair expense.

If your vehicle is damaged and requires any metal repair or replacement, be sure the body shop applies anti-corrosion materials to the parts repaired or replaced.

Bright-metal maintenance

- To remove road tar and insects, use a tar remover, not a scraper or other sharp object.
- To protect the surfaces of bright-metal parts from corrosion, apply a coating of wax or chrome preservative and rub to a high luster.
- During winter weather or in coastal areas, cover the bright metal parts with a heavier coating of wax or preservative. If necessary, coat the parts with non-corrosive petroleum jelly or other protective compound.

Underbody maintenance

Road salt and other corrosive chemicals are used in cold weather states to melt snow and prevent ice accumulation. If these chemicals are not regularly removed, they will corrode the vehicle underbody and over time damage fuel lines, the fuel tank retention system, the vehicle suspension, the exhaust system, and even the body frame.

- Wash the undercarriage of your vehicle regularly during the winter and whenever your vehicle has been exposed to such salts or chemicals.

- Do a thorough washing of the undercarriage at the end of the winter.
- Use professional service technicians or governmental inspection stations to annually inspect for corrosion.
- Immediately seek an inspection of your vehicle if you become visually aware of corrosion flaking or scaling or if you become aware of a change in vehicle performance, such as soft or spongey brakes, fluids leaking, impairment of directional control, suspension noises or rattling metal straps.

Aluminum wheel maintenance

The aluminum wheels are coated with a clear protective finish.

- Do not use any abrasive cleaner, polishing compound, solvent, or wire brushes on aluminum wheels. They may scratch the finish.
- Clean the wheel when it has cooled.
- Use only a mild soap or neutral detergent, and rinse thoroughly with water. Also, be sure to clean the wheels after driving on salted roads. This helps prevent corrosion.
- Avoid washing the wheels with highspeed vehicle wash brushes.
- Do not use any alkaline or acid detergents It may damage and corrode the aluminum wheels coated with a clear protective finish.

Corrosion protection

Protecting your vehicle from corrosion

By using the most advanced design and construction practices to combat corrosion, we produce vehicles of the excellent quality. However, this is only part of the job. To achieve the long-term corrosion resistance your vehicle can deliver, the owner's cooperation and assistance is also required.

Common causes of corrosion

The most common causes of corrosion on your vehicle are:

- Road salt, dirt and moisture that is allowed to accumulate underneath the vehicle.
- Removal of paint or protective coatings by stones, gravel, abrasion or minor scrapes and dents which leave unprotected metal exposed to corrosion.

High-corrosion areas

If you live in an area where your vehicle is regularly exposed to corrosive materials, corrosion protection is particularly important. Some of the common causes of accelerated corrosion are road salts, dust control chemicals, ocean air and industrial pollution.

Moisture breeds corrosion

Moisture creates the conditions in which corrosion is most likely to occur. For example, corrosion is accelerated by high humidity, particularly when temperatures are just above freezing. In such conditions, the corrosive material is kept in contact with the vehicle's surface by moisture that evaporates slowly.

Mud is particularly corrosive because it dries slowly and holds moisture in contact with the vehicle. Although the mud appears to be dry, it can still retain the moisture and promote corrosion.

High temperatures can also accelerate corrosion of parts that are not properly ventilated so the moisture can be dispersed. For all these reasons, it is particularly important to keep your vehicle clean and free of mud or accumulations of other materials. This applies not only to the visible surfaces but particularly to the underside of the vehicle.

To help prevent corrosion

You can help prevent corrosion from beginning by observing the following:

Keep your vehicle clean

The best way to prevent corrosion is to keep your vehicle clean and free of corrosive materials. Attention to the underside of the vehicle is particularly important.

- If you live in a high-corrosion area — where road salts are used, near the ocean, areas with industrial pollution, acid rain, etc.—, you should take extra care to prevent corrosion. In winter, hose off the underside of your vehicle at least once a month and be sure to clean the underside thoroughly when winter is over.
- When cleaning underneath the vehicle, give particular attention to the components under the fenders and other areas that are hidden from view. Do a thorough job; just dampening the accumulated mud rather than washing it away will accelerate corrosion rather than prevent it. Water under high pressure and steam are particularly effective in removing accumulated mud and corrosive materials.

- When cleaning lower door panels, rocker panels and frame members, be sure that drain holes are kept open so that moisture can escape and not be trapped inside to accelerate corrosion.

Keep your garage dry

Don't park your vehicle in a damp, poorly ventilated garage. This creates a favorable environment for corrosion. This is particularly true if you wash your vehicle in the garage or drive it into the garage when it is still wet or covered with snow, ice or mud. Even a heated garage can contribute to corrosion unless it is well ventilated so moisture is dispersed.

Keep paint and trim in good condition

Scratches or chips in the finish should be covered with "touch-up" paint as soon as possible to reduce the possibility of corrosion. If bare metal is showing through, the attention of a qualified body and paint shop is recommended.

Bird droppings : Bird droppings are highly corrosive and may damage painted surfaces in just a few hours. Always remove bird droppings as soon as possible.

Don't neglect the interior

Moisture can collect under the floor mats and carpeting and cause corrosion. Check under the mats periodically to be sure the carpeting is dry. Use particular care if you carry fertilizers, cleaning materials or chemicals in the vehicle.

These should be carried only in proper containers and any spills or leaks should be cleaned up, flushed with clean water and thoroughly dried.

Interior care

Interior general precautions

Prevent chemicals such as perfume, cosmetic oil, sun cream, hand cleaner, and air freshener from contacting the interior parts because they may cause damage or discoloration. If they do contact the interior parts, wipe them off immediately. If necessary, use a vinyl cleaner, see product instructions for correct usage.

⚠ **CAUTION - Electrical components**

Never allow water or other liquids to come in contact with electrical/electronic components inside the vehicle as this may damage them.

⚠ **CAUTION - Leather**

When cleaning leather products (steering wheel, seats etc.), use neutral detergents or low alcohol content solutions. If you use high alcohol content solutions or acid/alkaline detergents, the color of the leather may fade or the surface may get stripped off.

Taking care of leather seats

- Vacuum the seat periodically to remove dust and sand on the seat. It will prevent abrasion or damage of the leather and maintain its quality.
- Wipe the natural leather seat cover often with dry or soft cloth.
- Sufficient use of a leather protective may prevent abrasion of the cover and helps maintain the color.

  Be sure to read the instructions and consult a specialist when using leather coating or protective agents.
- Leather with bright colors(beige, cream beige) is easily contaminated and clear in appearance. Clean the seats frequently.
- Avoid wiping with wet cloth. It may cause the surface to crack.

Cleaning the leather seats

- Remove all contaminations instantly. Refer to instructions below for removal of each contaminant.
- Cosmetic products(sunscreen, foundation, etc.)
  - Apply cleansing cream on a cloth and wipe the contaminated point. Wipe off the cream with a wet cloth and remove water with a dry cloth.
- Beverages(coffee, soft drink, etc.)
  - Apply a small amount of neutral detergent and wipe until contaminations do not smear.
- Oil
  - Remove oil instantly with absorbable cloth and wipe with stain remover for natural leather only.
- Chewing gum
  - Harden the gum with ice and remove gradually.

Fabric seat cover (If equipped)

Please clean the fabric seats regularly with a vacuum cleaner in consideration of fabric material characteristics. If they are heavily soiled with beverage stains, etc., use a suitable interior cleaner. To prevent damage to seat covers, wipe off the seat covers down to the seams with a large wiping motion and moderate pressure using a soft sponge or microfiber cloth.

Velcro closures on clothing or sharp objects may cause snagging or scratches on the surface of the seats.

Make sure not to rub such objects against the surface.

Cleaning the upholstery and interior trim

Vinyl

Remove dust and loose dirt from vinyl with a whisk broom or vacuum cleaner. Clean vinyl surfaces with a vinyl cleaner.

Fabric

Remove dust and loose dirt from fabric with a whisk broom or vacuum cleaner. Clean with a mild soap solution recommended for upholstery or carpets. Remove fresh spots immediately with a fabric spot cleaner. If fresh spots do not receive immediate attention, the fabric can be stained and its color can be affected. Also, its fire-resistant properties can be reduced if the material is not properly maintained.

Using anything but recommended cleaners and procedures may affect the fabric's appearance and fire-resistant properties.

Cleaning the lap/shoulder belt webbing

Clean the belt webbing with any mild soap solution recommended for cleaning upholstery or carpet. Follow the instructions provided with the soap. Do not bleach or re-dye the webbing because this may weaken it.

Cleaning the interior window glass

If the interior glass surfaces of the vehicle become fogged (that is, covered with an oily, greasy or waxy film), they should be cleaned with a glass cleaner. Follow the directions on the glass cleaner container.

⚠ CAUTION - Rear window

Do not scrape or scratch the inside of the rear window. This may result in damage of the rear window defroster grid.

EMISSION CONTROL SYSTEM

The emission control system of your vehicle is covered by a written limited warranty. Please see the warranty information contained in the Warranty & Consumer Information manual in your vehicle.

Your vehicle is equipped with an emission control system to meet all applicable emission regulations.

There are three emission control systems, as follows.

(1) Crankcase emission control system
(2) Evaporative emission control system
(3) Exhaust emission control system

In order to assure the proper function of the emission control systems, it is recommended that you have your vehicle inspected and maintained by an authorized Kia dealer in accordance with the maintenance schedule in this manual.

Caution for the Inspection and Maintenance Test (With Electronic Stability Control (ESC) system)

- **To prevent the vehicle from misfiring during dynamometer testing, turn the Electronic Stability Control (ESC) system off by selecting the LCD display.**
- **After dynamometer testing is completed, turn the ESC system back on by selecting the LCD display again.**

1. Crankcase emission control system

The positive crankcase ventilation system is employed to prevent air pollution caused by blow-by gases being emitted from the crankcase. This system supplies fresh filtered air to the crankcase through the air intake hose. Inside the crankcase, the fresh air mixes with blow-by gases, which then pass through the PCV valve into the induction system.

2. Evaporative emission control (including ORVR: Onboard Refueling Vapor Recovery) system

The Evaporative Emission Control System is designed to prevent fuel vapors from escaping into the atmosphere.

(The ORVR system is designed to allow the vapors from the fuel tank to be loaded into a canister while refueling at the gas station, preventing the escape of fuel vapors into the atmosphere.)

Canister

Fuel vapors generated inside the fuel tank are absorbed and stored in the onboard canister. When the engine is running, the fuel vapors absorbed in the canister are drawn into the surge tank through the purge control solenoid valve.

Purge Control Solenoid Valve (PCSV)

The purge control solenoid valve is controlled by the Engine Control Module (ECM); when the engine coolant temperature is low during idling, the PCSV closes so that evaporated fuel is not taken into the engine. After the engine warms up during ordinary driving, the PCSV opens to introduce evaporated fuel to the engine.

3. Exhaust emission control system

The Exhaust Emission Control System is a highly effective system which controls exhaust emissions while maintaining good vehicle performance.

Engine exhaust gas precautions (carbon monoxide)

- Carbon monoxide can be present with other exhaust fumes. Therefore, if you smell exhaust fumes of any kind inside your vehicle, have it inspected and repaired immediately. If you ever suspect exhaust fumes are coming into your vehicle, drive it only with all the windows fully open. Have your vehicle checked and repaired immediately.

⚠ WARNING - Exhaust

Engine exhaust gases contain carbon monoxide (CO). Though colorless and odorless, it is dangerous and could be lethal if inhaled. Follow the instructions on this page to avoid CO poisoning.

- Do not operate the engine in confined or closed areas (such as garages) any more than what is necessary to move the vehicle in or out of the area.
- When the vehicle is stopped in an open area for more than a short time with the engine running, adjust the ventilation system (as needed) to draw outside air into the vehicle.
- Never sit in a parked or stopped vehicle for any extended time with the engine running.
- When the engine stalls or fails to start, excessive attempts to restart the engine may cause damage to the emission control system.

Operating precautions for catalytic converters (if equipped)

⚠ WARNING - Catalytic converter

Keep away from the catalytic converter and exhaust system while the vehicle is running or immediately thereafter. The exhaust and catalytic systems are very hot and may burn you.

⚠ WARNING - Fire

- **Do not park, idle or drive the vehicle over or near flammable objects, such as grass, vegetation, paper, leaves, etc. A hot exhaust system can ignite flammable items under your vehicle.**
- **Also, do not remove the heat sink around the exhaust system, do not seal the bottom of the vehicle or do not coat the vehicle for corrosion control. It may present a fire risk under certain conditions.**

Your vehicle is equipped with a catalytic converter emission control device.

Therefore, the following precautions must be observed:

- Use only UNLEADED FUEL for gasoline engines.
- Do not operate the vehicle when there are signs of engine malfunction, such as misfire or a noticeable loss of performance.
- Do not misuse or abuse the engine. Examples of misuse are coasting with the ignition off and descending steep grades in gear with the ignition off.
- Do not operate the engine at high idle speed for extended periods (5 minutes or more).
- Do not modify or tamper with any part of the engine or emission control system. All inspections and adjustments must be made by an authorized Kia dealer.
- Avoid driving with an extremely low fuel level. Running out of fuel could cause the engine to misfire, damaging the catalytic converter.

Failure to observe these precautions could result in damage to the catalytic converter and to your vehicle. Additionally, such actions could void your warranties.

Specifications, Consumer information and Reporting safety defects

Engine 8-2
Dimensions 8-2
Bulb wattage 8-3
Tires and wheels 8-5
Gross vehicle weight 8-7
Luggage volume 8-7
Air conditioning system 8-7
Recommended lubricants and capacities 8-8
• Recommended SAE viscosity number 8-10
Vehicle Identification Number (VIN) 8-11
Vehicle certification label 8-11
Tire specification and pressure label 8-12
Engine number 8-12
Reporting Safety Defects 8-13

DIMENSIONS

ITEM			Unit : mm (in)
Overall length			4,485 (176.5)
Overall width			1,855 (73.0)
Overall height	Without Roof rack		1,635 (64.4)
	With Roof rack		1,645 (64.8)
Tread	Front	225/60R17	1,613 (63.5)
		225/55R18	
		245/45R19	1,609 (63.3)
	Rear	225/60R17	1,625 (63.9)
		225/55R18	
		245/45R19	1,620 (63.7)
Wheelbase			2,670 (105.1)

ENGINE

Items	Theta II 2.4 L GDI	Theta II 2.0 L T-GDI
Displacement cc (cu. in)	2,359 (143.95)	143.95 (121.92)
Bore x Stroke mm (in.)	88.0 x 97.0 (3.46 x 3.81)	86 x 86 (3.38 x 3.38)
Firing order	1-3-4-2	
No. of cylinders	4 In-line, DOHC	

BULB WATTAGE

Light Bulb			Wattage (W)	Bulb type
Front	Headlamps (Low)	Bulb type	60	HB3
		LED type	LED	LED
	Headlamps (High)	Bulb type	60	HB3
		LED type	LED	LED
	Front turn signal lamps	Bulb type	21	PY28/8W
		LED type	LED	LED
	Position lamps	Bulb type	5	P21/5W
		LED type	LED	LED
	Daytime running light*	Bulb type	21	P21/5W
		LED type	LED	LED
	Front fog lamps*	Bulb type	51	HB4
		LED type	LED	LED
	Side marker	Bulb type	5	W5W
		LED type	LED	LED
Rear	Rear Stop/Tail lamps (Outside)	Bulb type	28/8	P28/8W
		LED type	LED	LED
	Rear tail lamps (Inside)	Bulb type	5	P21/5W
		LED type	LED	LED
	Rear turn signal lamps		21	PY21W
	Back-up lamps		21	P21W
	Side marker	Bulb type	5	W5W
		LED type	LED	LED
	High mounted stop lamp		LED	LED
	License plate lamps		5	W5W

* If equipped

(Continued)

(Continued)

Light Bulb			Wattage (W)	Bulb type
Interior	Map lamps	Bulb type	10	W10W
		LED type	LED	LED
	Room lamps	Bulb type	10	FESTOON
		LED type	LED	LED
	Personal lamp*		LED	LED
	Vanity mirror lamps*		5	FESTOON
	Glove box lamp		5	FESTOON
	Liftgate lamp	Bulb type	10	FESTOON
		LED type	LED	LED

* If equipped

TIRES AND WHEELS

Item	Tire size	Wheel size	Load Capacity		Speed capacity		Inflation pressure [kPa (psi)]				Wheel lug nut torque [Kgf·m (lbf·ft, N·m)]
							Normal load *3		Maximum load		
			LI *1	Kg	SS *2	Km/h	Front	Rear	Front	Rear	
Full size tire	225/60R17	7.0JX17	99	775	H	210	240 (35)	240 (35)	240 (35)	240 (35)	11 ~ 13 (79 ~ 94, 107 ~ 127)
	225/55R18	7.0JX18	98	750	H	210	240 (35)	240 (35)	240 (35)	240 (35)	
	245/45R19	7.5JX19	98	750	H	210	240 (35)	240 (35)	240 (35)	240 (35)	
Compact spare tire (if equipped)	T155/90D16	4TX16	110	1060	M	130	420 (60)	420 (60)	420 (60)	420 (60)	
	T135/90D17	4TX17	103	875	M	130	420 (60)	420 (60)	420 (60)	420 (60)	
	T135/90D17	4TX17	104	900	M	130	420 (60)	420 (60)	420 (60)	420 (60)	

*1: Load Index
*2: Speed Symbol
*3: Normal load : Up to 3 persons

⚠ CAUTION

When replacing tires, use the same size originally supplied with the vehicle.
Using tires of a different size can damage the related parts or make them work irregularly.

✻ NOTICE

- **It is permissible to add 21 kPa (3 psi) the standard tire pressure specification if colder temperatures are expected soon.**
  Tires typically loose 7 kPa (1 psi) for every -11°C (12°F) temperature drop. If extreme temperature variations are expected, re-check your tire pressure as necessary to keep them properly inflated.
- **We recommend that when replacing tires, use the same originally supplied with the vehicles. If not, that affects driving performance.**
- **When driving in high altitude grades, it is natural for the atmospheric pressure to decrease. Therefore, please check the tire pressure and add more air when necessary.**
  Additionally required tire air pressure per km above sea level: 10.5 kPa (1.5 psi)

GROSS VEHICLE WEIGHT

Items		Theta II 2.4 L GDI	Theta II 2.0 L T-GDI
Gross vehicle weight kg (lbs.)	2WD	2,085 kg (4,597 lbs)	2,165 kg (4,773 lbs)
	4WD	2,150 kg (4,740 lbs)	2,210 kg (4,872 lbs)

LUGGAGE VOLUME

ITEM		5 Seater
SAE	V7	From flat luggage board :1619 L (57.17 cu ft) From lower luggage board : 1767 L (62.40 cu ft)
	V6	From flat luggage board : 795 L (20.07 cu ft) From lower luggage board : 867 L (30.61 cu ft)

Min(V7) : Max Behind Second Seat
Max(V6) : Max Behind Front Seat

AIR CONDITIONING SYSTEM

Items	Weight of Volume	Classification
Refrigerant g (oz.)	550 ± 25 (19.4 ± 0.88)	R-1234yf
Compressor lubricant cc (oz.)	120 ± 10 (4.05 ± 0.35)	PAG30

We recommend that you contact an authorized Kia dealer for more details.

RECOMMENDED LUBRICANTS AND CAPACITIES

To help achieve proper engine and powertrain performance and durability, use only lubricants of the proper quality. The correct lubricants also help promote engine efficiency that results in improved fuel economy.

These lubricants and fluids are recommended for use in your vehicle.

Lubricant		Volume	Classification
Engine oil *1 *2 (drain and refill) Recommends TOTAL QUARTZ	Theta II 2.4 L GDI	4.8 L (5.07 US qt.)	SAE 5W-20 / API Latest(ILSAC Latest)
	Theta II 2.0 L T-GDI	4.8 L (5.07 US qt.)	SAE 5W-30 ACEA A5 or SAE 0W-30 ACEA C2 / API Latest (ILSAC Latetst)
Automatic transmission fluid	Theta II 2.4 L GDI	6.7 L (7.01 US qt.)	- ATF SP-IV • The list of transmission fluid approved by KIA: SK ATF SP-IV, MICHANG ATF SP-IV, NOCA ATF SP-IV
	Theta II 2.0 L T-GDI	7.8 L (8.24 US qt.)	- ATF SP-IV • The list of transmission fluid approved by KIA: SK ATF SP-IV, MICHANG ATF SP-IV, NOCA ATF SP-IV
Coolant	Theta II 2.4 L GDI	7.8 L (8.24 US qt.)	Mixture of antifreeze and water (Ethylene-glycol with phosphate based coolant for cooling device)
	Theta II 2.0 L T-GDI	7.2 L (7.61 US qt.)	
Brake fluid		385 ± 20 cc (0.401 ± 0.021 US qt.)	DOT 3 or DOT 4

Lubricant		Volume	Classification
Rear differential oil (4WD)		0.58 L (0.61 US qt.)	Hypoid gear oil API GL-5, SAE 75W/85 (SK HCT-5 gear oil 75W/85 or equivalent)
Transfer case oil (4WD)	Theta II 2.4 L GDI	0.45 L (0.48 US qt.)	
	Theta II 2.0 L T-GDI		
Fuel		62 L (65.53 US qt.)	Unleaded gasoline

*1 : Refer to the recommended SAE viscosity numbers on the next page.

*2 : Engine oils labeled Energy Conserving Oil are now available. Along with other additional benefits, they contribute to fuel economy by reducing the amount of fuel necessary to overcome engine friction. Often, these improvements are difficult to measure in everyday driving, but in a year's time, they can offer significant cost and energy savings.

Recommended SAE viscosity number

Engine oil viscosity (thickness) has an effect on fuel economy and cold weather operating (engine start and engine oil flowability). Lower viscosity engine oils can provide better fuel economy and cold weather performance; however, higher viscosity engine oils are required for satisfactory lubrication in hot weather. Using oils of any viscosity other than those recommended could result in engine damage. When choosing an oil, consider the range of temperature your vehicle will be operated in before the next oil change. Proceed to select the recommended oil viscosity from the chart.

Temperature Range for SAE Viscosity Numbers

Temperature	°C	-30	-20	-10	0	10	20	30	40	50
	(°F)	-10	0	20	40	60	80	100	120	
Theta II 2.4 L GDI				10W-30						
		5W-20, 5W-30								
Theta II 2.0 L T-GDI					20W-50					
				15W-40						
				10W-30						
		0W-30, 5W-30, 5W-40								

An engine oil displaying this API Certification Mark conforms to the international Lubricant Specification Advisory Committee (ILSAC). It is recommended to only use engine oils that uphold this API Certification Mark.

VEHICLE IDENTIFICATION NUMBER (VIN)

■ Frame number

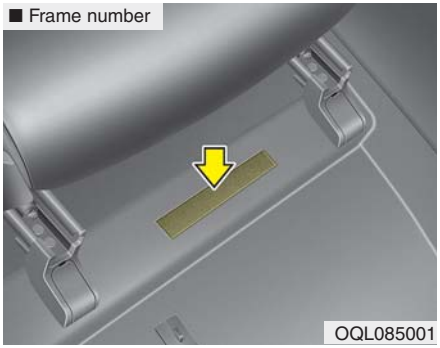

The vehicle identification number (VIN) is the number used in registering your vehicle and in all legal matters pertaining to its ownership, etc.

The number is punched on the front side wall of the engine room.

■ VIN label

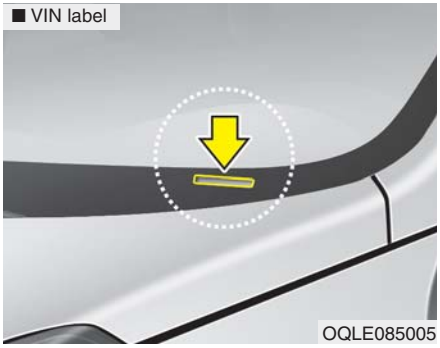

The VIN is also on a plate attached to the top of the dashboard. The number on the plate can easily be seen through the windshield from outside.

VEHICLE CERTIFICATION LABEL

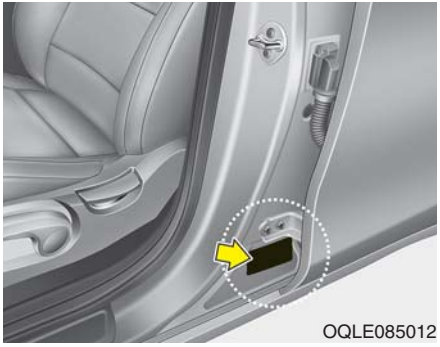

The vehicle certification label attached on the driver's side center pillar gives the vehicle identification number (VIN).

TIRE SPECIFICATION AND PRESSURE LABEL

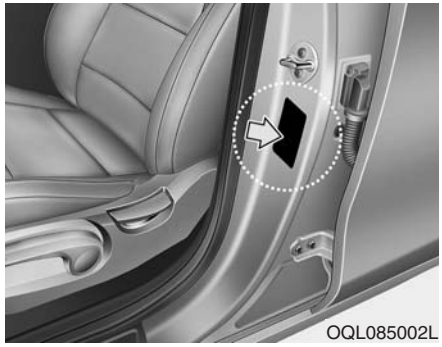

The tires supplied on your new vehicle are chosen to provide the best performance for normal driving.

The tire label located on the driver's side center pillar gives the tire pressures recommended for your vehicle.

ENGINE NUMBER

■ Gasoline engine (Theta II 2.4 L GDI)

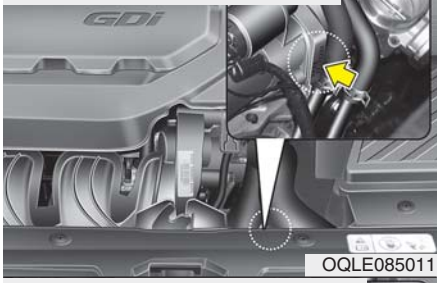

■ Gasoline engine (Theta II 2.0 L T-GDI)

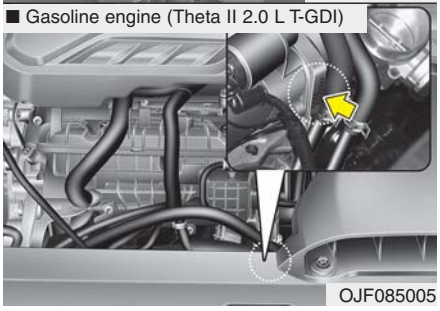

The engine number is stamped on the engine block as shown in the drawing.

REPORTING SAFETY DEFECTS

If you believe that your vehicle has a defect which could cause a crash or could cause injury or death, you should immediately inform Transport Canada (TC) in addition to notifying **Kia Canada Inc..**

Mailing Address:
Transport Canada - ASFAD
330 Sparks Street
Ottawa, ON
K1A 0N5

Telephone: 819-994-3328 (Ottawa-Gatineau area or internationally)
Toll free: 1-800-333-0510 (in Canada)

Online:
http://www.tc.gc.ca/recalls

If TC receives similar complaints, it may open an investigation, and if it finds that a safety defect exists in a group of vehicles, it may order a recall and remedy campaign. However, TC cannot become involved in individual problems between you, your dealer, or **Kia Canada Inc..**

Index

A

Air bag - advanced supplemental restraint system.....3-45
Adding equipment to or modifying your air bag -equipped vehicle.....3-72
Air bag warning label 3-72
Air bag warning light.....3-48
Curtain air bag 3-64
Driver's and passenger's front air bag 3-60
How does the air bag system operate? 3-46
Occupant Detection System (ODS).....3-52
Side air bag 3-62
SRS Care 3-71
SRS components and functions 3-49
Air cleaner 7-36
Filter replacement 7-36
Air conditioning system 8-7
All Wheel Drive(AWD) 5-23
All Wheel Drive (AWD) transfer mode selection 5-25
For safe all wheel drive operation 5-26
Reducing the risk of a rollover 5-29
Tight corner brake effect 5-24
Appearance care 7-94
Exterior care.....7-94
Interior care 7-99
Audio system 4-188
Antenna 4-188
How vehicle radio works 4-190
Steering wheel audio controls 4-188
USB port 4-190
Automatic climate control system 4-154
Automatic heating and air conditioning 4-155
Checking the amount of air conditioner refrigerant and compressor lubricant.....4-165
Climate control air filter 4-164
Manual heating and air conditioning.....4-156
System operation 4-162
Automatic transmission 5-15
Automatic transmission operation 5-15
Good driving practices.....5-22

B

Battery.....7-43
For best battery service 7-43
Recharging the battery.....7-44
Reset items.....7-45
Before driving.....5-5
Before entering vehicle 5-5
Before starting 5-5
Necessary inspections 5-5
Blind-Spot Collision Warning (BCW) 5-99
System description.....5-99
System setting and activation 5-100
Brake fluid 7-33
Checking the brake fluid level.....7-33

Brake system.....5-31
Anti-lock Brake System (ABS).....5-45
AUTO HOLD.....5-41
Downhill Brake Control (DBC).....5-51
Electronic Parking Brake (EPB).....5-34
Electronic Stability Control (ESC).....5-47
Good braking practices.....5-55
Good braking practices.....5-53
Hill-start Assist Control (HAC).....5-55
Parking brake – Foot type.....5-33
Power brakes.....5-31
Vehicle stability management (VSM).....5-53
Warning messages.....5-43
Bulb wattage.....8-3

C

Checking fluid levels.....7-26
Child restraint system (CRS).....3-34
Children Always in the Rear.....3-34
Installing a Child Restraint System (CRS).....3-38
Selecting a Child Restraint System (CRS).....3-35
Clean air.....4-170
Climate control air filter.....7-38
Filter inspection.....7-38
Cruise Control (CC).....5-114
To cancel Cruise Control, do one of the following..5-116
To decrease the cruising speed.....5-116
To increase Cruise Control set speed.....5-115
To resume cruising speed at more than approximately 30 km/h (20 mph).....5-117
To set Cruise Control speed.....5-115
To temporarily accelerate with Cruise Control on..5-116
To turn Cruise Control off, do one of the following..5-117

D

Declaration of Conformity.....4-193
IC.....4-193
Defroster.....4-143
Rear window defroster.....4-143
Dimensions.....8-2
Door locks.....4-23
Child-protector rear door lock.....4-26
Impact sensing door unlock system.....4-26
Operating door locks from inside the vehicle.....4-24
Operating door locks from outside the vehicle.....4-23
Drive mode integrated control system.....5-57
DRIVE mode.....5-57
Driver Attention Warning (DAW).....5-109
Resetting the system.....5-111
System malfunction.....5-111
System setting and activation.....5-109
System standby.....5-111

E

Economical operation 5-148
Emergency starting 6-5
Jump starting 6-5
Push-starting 6-6
Emission control system 7-102
Crankcase emission control system 7-102
Evaporative emission control (including ORVR: Onboard Refueling Vapor Recovery) system 7-102
Exhaust emission control system 7-103
Engine 8-2
Engine compartment 2-6, 7-3
Engine coolant 7-29
Changing the coolant 7-32
Checking the coolant level 7-29
Engine number 8-12
Engine oil 7-27
Changing the engine oil and filter 7-28
Checking the engine oil level 7-27
ENGINE START/STOP button 5-11
ENGINE START/STOP button position 5-11
Illuminated ENGINE START/STOP button 5-11
Starting the engine with a smart key 5-13
Explanation of scheduled maintenance items 7-21
Exterior features 4-186
Roof rack 4-186
Exterior overview 2-2

F

Folding key 4-5
Battery replacement 4-8
Immobilizer system 4-9
Key operations 4-5
Record your key number 4-5
Transmitter precautions 4-7
Forward Collision-Avoidance Assist (FCA) (Front view camera only) 5-59
Brake operation 5-63
FCA front view camera sensor 5-63
FCA warning message and system control 5-61
Limitation of the system 5-67
System malfunction 5-65
System setting and activation 5-59
Forward Collision-Avoidance Assist (FCA) (Sensor fusion) 5-74
Brake operation 5-78
Detecting sensors (front view camera/front radar) 5-78
FCA warning message and system control 5-76
Limitation of the system 5-83
System malfunction 5-81
System setting and activation 5-74
Forward/Reverse Parking Distance Warning (PDW) ..4-122
Non-operational conditions of Parking Distance Warning 4-124
Operation of Parking Distance Warning 4-122

Self-diagnosis....4-126
Fuel filler lid....4-48
Closing the fuel filler lid....4-49
Opening the fuel filler lid....4-48
Fuel requirements....1-2
Do not use methanol....1-4
Fuel Additives....1-5
Gasoline containing alcohol and methanol....1-3
Operation in foreign countries....1-5
Fuses....7-61
Engine compartment fuse replacement....7-65
Fuse/relay panel description....7-67
Inner panel fuse replacement....7-63

G

Gross vehicle weight....8-7

H

Hood....4-46
Closing the hood....4-47
Opening the hood....4-46
How to use this manual....1-2

I

If the engine overheats....6-7
If the engine will not start....6-4
If engine doesn't turn over or turns over slowly....6-4
If engine turns over normally but does not start....6-4
If you have a flat tire (with spare tire)....6-15
Changing tires....6-17
Jack and tools....6-15
Removing and storing the spare tire....6-16
If you have a flat tire (with Tire Mobility Kit)....6-24
Checking the tire inflation pressure....6-31
Components of the Tire Mobility Kit (TMK)....6-27
Distributing the sealant....6-31
Introduction....6-25
Notes on the safe use of the Tire Mobility Kit....6-25
Technical data....6-32
Using the Tire Mobility Kit....6-28
Important safety precautions....3-2
Air bag hazards....3-2
Always wear your seat belt....3-2
Control your speed....3-3
Driver distraction....3-2
Keep your vehicle in safe condition....3-3
Restrain all children....3-2
In case of an emergency while driving....6-3
If the engine stalls at a crossroad or crossing....6-3
If the engine stalls while driving....6-3

If you have a flat tire while driving 6-3
Instrument cluster 4-80
Gauges 4-82
Instrument cluster control 4-81
LCD display control 4-81
Transmission shift indicator.....4-85
Instrument panel overview 2-5
Interior features.....4-174
Air ventilation seat.....4-176
Bottle holder 4-174
Cargo security screen.....4-184
Coat hook.....4-182
Cup holder 4-174
Floor mat anchor (s).....4-183
Luggage net holder 4-183
Power outlet 4-177
Seat warmer 4-175
Sunvisor 4-176
USB charger.....4-178
Wireless smart phone charging system 4-179
Interior lights 4-139
Automatic turn off function 4-139
Glove box lamp 4-141
Liftgate room lamp 4-141
Map lamp 4-140
Room lamp.....4-139
Vanity mirror lamp.....4-141
Interior overview.....2-4

K

Key positions 5-7
Ignition switch position 5-7
Illuminated ignition switch 5-7
Starting the engine 5-9

L

Lane Keeping Assist (LKA) 5-90
LKA malfunction.....5-95
LKA operation 5-92
LKA system Function Change.....5-96
LCD display 4-86
LCD modes 4-86
User settings mode.....4-89
Liftgate (for manual liftgate) 4-28
Closing the liftgate.....4-28
Emergency liftgate safety release 4-29
Opening the liftgate 4-28
Light bulbs 7-79
Back-up lamp and Rear turn signal lamp (Bulb type) bulb replacement 7-89
Bulb replacement precaution 7-79
Front fog lamp (Bulb and LED type) bulb replacement 7-86
Front turn signal lamp bulb replacement.....7-84
Glove box lamp (Bulb type) bulb replacement 7-92

Headlamp (High/Low beam) bulb replacement.....7-83
High mounted stop lamp (LED type) bulb replacement 7-89
License plate lamp (Bulb type) bulb replacement.....7-89
Liftgate room lamp (Bulb type) bulb replacement 7-93
Light bulb position (Front) 7-81
Light bulb position (Rear) 7-82
Light bulb position (Side) 7-83
Map lamp (Bulb and LED type) bulb replacement....7-90
Personal lamp (LED type) bulb replacement 7-92
Position lamp + DRL bulb replacement 7-85
Room lamp (Bulb type) bulb replacement 7-91
Side repeater lamp (LED type) bulb replacement.....7-90
Stop and tail lamp (LED type) bulb replacement 7-88
Stop and tail lamp bulb replacement 7-86
Tail lamp (inside) bulb replacement 7-87
Vanity mirror lamp (Bulb type) bulb replacement 7-91
Lighting.....4-127
Battery saver function 4-127
Check headlight 4-133
Daytime running light 4-127
Dynamic Bending Light (DBL).....4-134
Front fog light 4-133
High beam assist (HBA) 4-130
High beam operation 4-129
Lighting control 4-127
Turn signals and lane change signals.....4-132
Luggage volume 8-7

M

Maintenance services 7-4
Owner maintenance precautions 7-5
Owner's responsibility 7-4
Manual climate control system.....4-144
Checking the amount of air conditioner refrigerant and compressor lubricant.....4-153
Climate control air filter 4-152
Heating and air conditioning 4-145
System operation 4-150
Mirrors 4-62
Inside rearview mirror 4-62
Outside rearview mirror.....4-76

O

Owner maintenance 7-7
Owner maintenance schedule 7-7

P

Panoramic sunroof 4-52
Closing the sunroof 4-56
Resetting the sunroof 4-56
Sliding the sunroof.....4-54
Sunroof open warning 4-53
Sunshade 4-53

Tilting the sunroof 4-56
Parking brake 7-35
Checking the parking brake 7-35
Power liftgate 4-31
Closing the liftgate.....4-33
Opening the liftgate 4-32
Smart Power Liftgate 4-37

R

Rear cross-traffic collision warning (RCCW) 5-139
System description 5-139
System setting and activation 5-139
Rear View Monitor (RVM).....4-117
Recommended lubricants and capacities 8-8
Recommended SAE viscosity number 8-10
Reporting Safety Defects 8-13
Reverse Parking Distance Warning (PDW) 4-118
Non-operational conditions of Reverse Parking Distance Warning.....4-119
Operation of Reverse Parking Distance Warning 4-118
Reverse Parking Distance Warning precautions 4-120
Self-diagnosis.....4-121
Road warning 6-2
Hazard warning flasher 6-2

S

Scheduled maintenance service 7-9
Seat 3-4
Front seat adjustment - manual 3-8
Front seat adjustment - power 3-10
Headrest (for front seat).....3-12
Rear seat adjustment 3-15
Seatback pocket 3-15
Seat belts.....3-20
Care of seat belts 3-33
Pre-tensioner seat belt 3-28
Seat belt precautions 3-31
Seat belt restraint system 3-20
Smart Cruise Control(SCC) 5-118
Limitations of the system.....5-132
Smart Cruise Control cancelled.....5-124
Smart Cruise Control speed 5-120
Smart Cruise Control switch 5-120
To adjust the sensitivity of Smart Cruise Control 5-131
To convert to Cruise Control mode 5-132
Vehicle to vehicle distance setting.....5-125
When the lane ahead is clear 5-126
When there is a vehicle ahead of you in your lane ..5-127
Smart key 4-12
Battery replacement 4-16
Loss of the smart key.....4-15
Mechanical key 4-15

Record your key number 4-12
Smart key function.....4-12
Smart key immobilizer system 4-17
Smart key precautions 4-15
Special driving conditions 5-150
Driving at night 5-153
Driving in flooded areas 5-154
Driving in the rain 5-153
Driving off-road 5-154
Hazardous driving conditions 5-150
Highway driving 5-154
Reducing the risk of a rollover 5-150
Rocking the vehicle 5-152
Smooth cornering.....5-152
Steering wheel 4-58
Electronic Power Steering (EPS).....4-58
Heated steering wheel 4-60
Horn 4-61
Tilt and telescopic steering 4-59
Storage compartments 4-171
Center console storage.....4-171
Glove box.....4-171
Luggage box.....4-172
Sunglass holder 4-172
Two types of luggage board levels 4-173

T

Theft-alarm system 4-20
Armed stage 4-20
Disarmed stage.....47-21
Theft-alarm stage 4-21
Tire Pressure Monitoring System (TPMS).....6-8
Changing a tire with TPMS 6-12
Check tire pressure.....6-8
Low tire pressure position telltale 6-10
Low tire pressure telltale 6-10
Tire specification and pressure label 8-12
Tires and wheels 7-46, 8-5
All season tires.....7-58
Checking tire inflation pressure.....7-47
Low aspect ratio tire 7-59
Radial-ply tires.....7-59
Recommended cold tire inflation pressures.....7-46
Snow tires.....7-58
Summer tires 7-58
Tire care 7-46
Tire maintenance 7-51
Tire pressure.....7-47
Tire replacement 7-50
Tire rotation 7-48
Tire sidewall labeling.....7-51
Tire traction 7-51
Wheel alignment and tire balance 7-49

Wheel replacement 7-51
Towing 6-33
Emergency towing 6-35
Removable towing hook 6-34
Towing service 6-33
Trailer Towing.....5-159
Driving with a trailer 5-161
Hitches 5-160
If you do decide to pull a trailer 5-165
Maintenance when trailer towing 5-164
Safety chains 5-160
Trailer brakes 5-160
Trip modes (Trip computer) 4-94
Fuel economy.....4-94
Trip modes 4-94
Warning messages 4-97

V

Vehicle break-in process.....1-6
Vehicle certification label 8-11
Vehicle data collection and event data recorders 1-7
Vehicle handling instructions 1-6
Vehicle Identification Number (VIN).....8-11
Vehicle load limit 5-167
Certification label.....5-171
Tire and loading information label 5-167
Vehicle modifications 1-6
Vehicle weight 5-172

W

Warning and indicator lights.....4-104
Indicator lights 4-112
Warning lights 4-104
Washer fluid 7-34
Checking the washer fluid level.....7-34
Welcome system 4-142
Headlight (Headlamp) escort function.....4-142
Interior light 4-142
Pocket lamp 4-142
Windows 4-41
Power windows 4-42
Windshield defrosting and defogging.....4-166
Automatic climate control system 4-167
Defogging logic 4-168
Manual climate control system 4-166
Winter driving.....5-156
Carry emergency equipment 5-158
Change to "winter weight" oil if necessary 5-157
Check battery and cables 5-157
Check spark plugs and ignition system 5-157
Don't let ice and snow accumulate underneath 5-158
Don't let your parking brake freeze 5-158
Snowy or icy conditions 5-156

To keep locks from freezing 5-158
Use high quality ethylene glycol coolant 5-157
Use approved window washer anti-freeze in system..5-158
Wiper blades 7-40
Blade inspection.....7-40
Blade replacement 7-40
Wipers and washers 4-135
Front windshield washers 4-136
Rear window wiper and washer switch 4-137
Windshield wipers 4-135